Dodge

Body Service Manual

Challenger
Dart
Charger
Coronet
Polara
Monaco

1971

MyMopar.com

Dodge

Passenger Car 1971

Body Service Manual

FOREWORD

This Dodge Body Service Manual has been prepared with the latest service information available for use on 1971 models. Diagnosis, disassembly, repair, assembly and installation procedures coupled with complete specifications and tightening references can be found in each unit. This publication is one of the most important "tools" available to the service technician. It will prove an invaluable aid in properly performing any phase of service necessary to maintain or restore the fine performance and reliability characteristics designed, engineered, and manufactured into these outstanding automobiles. For additional information not covered in the Body Service Manual, refer to the Chassis Service Manual.

MODELS

MONACO

POLARA

CHARGER

CORONET

CHALLENGER

DART

QUICK REFERENCE INDEX. To use, bend manual back to expose black spots on pages of the various sections. Then, by means of the index tabs on this page, locate the corresponding black spots on the first page of the section you desire.

UNIT INDEX

Introduction and General Information

1 Maintenance and Care

2 Lubrication

3 Sheet Metal

4 Interior Trim

5 Body Electrical

6 Side Glass

7 Stationary Glass

8 Convertible

9 Vinyl Roof Cover

10 Wood Grain Overlay

11 Sealing

12 Refinishing Procedures

13 Body and Frame Alignment

— Alphabetical Index

For information relative to ordering the special tools used and illustrated in this manual, or for additional copies of this manual, please refer to the instructions on inside back cover of this manual.

CHRYSLER CORPORATION

Chrysler Corporation reserves the right to make changes in design or to make additions to or improvements in its products without imposing any obligations upon itself to install them on its products previously manufactured.

Litho in U. S. A.

MyMopar.com

MANUAL DESCRIPTION

INTRODUCTION

This publication contains the essential removal, installation, adjustment and maintenance procedures for servicing all Body Styles. This information is current as of time of publication.

INDEX

The preceding page contains a "Table of Contents" which lists the unit number and subject title of each main body unit. The first page in each main body unit has an index to the subjects included in that unit.

PAGE NUMBERS

All page numbers consist of two sets of digits separated by a dash. The digits preceding the dash identify the main body. The digits following the dash represent the consecutive page number within the particular body unit. The page numbers can be found on the upper left or right of each page.

TEXT

Unless otherwise specified, each service procedure covers all body styles. Procedures covering specific styles are identified by the car line letter, body type or similar designation. A description of these designations is covered in this unit under **"VEHICLE AND ENGINE NUMBERS".**

ILLUSTRATIONS

Where possible, illustrations are placed in close proximity to the accompanying text and should be used as part of the text.

ALPHABETICAL INDEX

An alphabetical index is found at the rear of the Service Manual to aid in locating specific subjects and components.

MASTER TECHNICIAN'S SERVICE CONFERENCE (M.T.S.C.)

Throughout the service manual, refernce to M.T.S.C. material for the subject can be found at the beginning of the particular section. Example: M.T.S.C. 69-3 may be called out in the beginning of the subject matter. This refers to the year 1969 and the session issue number 3.

The Master Technician Service Conference is a training supplement available wherever Chrysler Corporation automotive services are available.

It should be clearly understood that the Master Technician's Service Conference does not constitute legal authority for performing service operations. It's value lies in greater understanding of a specific subject, which results in increased ability to accurately diagnose malfunctions.

VEHICLE AND ENGINE NUMBERS

VEHICLE NUMBER: The vehicle number (serial number) is located on a plate (Fig. 1) which is *attached to the instrument panel between the left* windshield wiper pivot and the left "A" post. It can easily be seen by looking through the windshield from the outside.

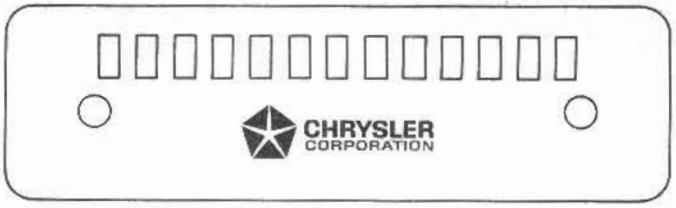

VEHICLE IDENTIFICATION NUMBER PLATE
INSTRUMENT PANEL LOCATED NR464

Fig. 1 Vehicle Identification Number Plate

All vehicle numbers contain thirteen digits. The vehicle number is a code which tells the carline (1st digit), price class (2nd digit), body type (3rd and 4th digit), engine displacement (5th digit), model year (6th digit), assembly plant (7th digit), and vehicle sequence number (last six digits).

This vehicle number is also stamped on the engine block. On six cylinder engines it is on a pad located below the number 6 spark plug at the cylinder head joint face. On eight cylinder engines it is on a pad located just to the rear of the right engine mount on the pan rail.

MyMopar.com

1st Digit Carline	2nd Digit Price Class	3rd & 4th Digits Body Type	5th Digit Eng. Displacement Cu. In.	6th Digit Model Year	7th Digit Assembly Plant
L-Dart J-Challenger W-Coronet/ Charger D-Polara/ Monaco	E-Economy L-Low M-Medium H-High P-Premium K-Police T-Taxi S-Special O-Superstock N-New York	21-2 Dr. Sedan Coupe 23-2 Dr. Hardtop 27-Convertible 29-2 Dr. Sport Hardtop 41-4 Dr. Sedan 43-4 Dr. Hardtop 45-2 Seat Station Wagon 46-3 Seat Station Wagon	B-198 C-225 E-Spec. Ord. 6 G-318 H-340 K-360 L-383 N-383 H/Perf. R-426 Hemi T-440 U-440 H/Perf. V-440 3/2 Bbl. Z-Spec. Ord. 8	1-1971	A-Lynch Road B-Hamtramck C-Jefferson D-Belvidere E-Los Angeles F-Newark G-St. Louis H-New Stanton P-Wyoming (Export) R-Windsor

ENGINE NUMBERS: All engine serial numbers contain fourteen characters and digits. The first two designate power train, the next three are the cubic inch displacement, the next one designates low compression, the next four are based on a 10, 000 day calendar and the last four designate engine built that day. All 198 and 225 cubic inch engines have the serial numbers stamped on the joint face at right corner, adjacent to number 1 cylinder bore. All 318, 340 and 360 cubic inch engines have the serial numbers stamped on the front of the block just below the left cylinder head. All 383, 426 and 440 cubic inch engines have the serial numbers stamped on the cylinder block pan rail at the left rear corner below the starter opening.

On all engines, information identifying undersized crankshaft, oversized tappets, low compression, oversized cylinder bores, engine built that day, the shift and 10,000 day calendar is stamped on the cylinder block at various locations depending on engine. There can be as many as fifteen characters and digits in this location. 198 and 225 cubic inch engines are stamped on the joint face at right corner, adjacent to number 1 cylinder bore, after serial number. 318, 340 and 360 cubic inch engines are stamped on the front of the block just below the left cylinder head. 383 cubic inch engines are stamped on the right bank joint face just forward of the number 2 cylinder bore. 426 and 440 cubic inch engines are stamped on the left bank pad, adjacent to front tappet rail. For additonal information on engines, see **Chassis Service Manual.**

BODY CODE PLATE: Includes schedule date, body type, engine code, transmission code, tire code, trim code and paint codes (Fig. 2).

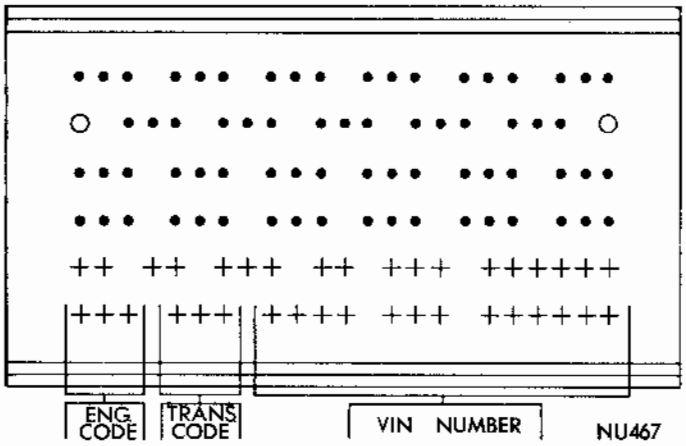

Fig. 2 Body Equipment Identification Plate

It is located on the left front fender side shield or wheel housing.

TIRE PRESSURE: A decal showing the recommended tire pressure is located on the body pillar at the rear of the left front door opening ("B" post). Tire Pressure data can be found in the Chassis Service Manual.

MyMopar.com

CAPACITY CONVERSION TABLE

U.S.	Imperial	U.S.	Imperial	U.S.	Imperial
1/4	1/4	7	5 3/4	15	12 1/2
1/2	3/8	7 1/4	6	15 1/2	13
3/4	5/8	7 1/2	6 1/4	16	13 1/4
		7 3/4	6 1/2	16 1/2	13 3/4
1	3/4			16 3/4	14
1 1/4	1	8	6 3/4		
1 1/2	1 1/4	8 1/4	6 3/4	17	14 1/4
1 3/4	1 1/2	8 1/2	7	17 1/2	14 1/2
		8 3/4	7 1/4	18	15
2	1 3/4	9	7 1/2	18 1/2	15 1/2
2 1/4	1 3/4	9 1/4	7 3/4	19	15 3/4
2 1/2	2	9 1/2	8	19 1/2	16 1/4
2 3/4	2 1/4	9 3/4	8	20	16 3/4
				20 1/2	17
3	2 1/2	10	8 1/4		
3 1/4	2 3/4	10 1/4	8 1/2	21	17 1/2
3 1/2	3	10 1/2	8 3/4	21 1/2	18
3 3/4	3	10 3/4	9	22	18 1/4
				22 1/2	18 3/4
4	3 1/4	11	9 1/4	23	19 1/4
4 1/4	3 1/2	11 1/4	9 1/4	23 1/2	19 1/2
4 1/2	3 3/4	11 1/2	9 1/2	24	20
4 3/4	4	11 3/4	9 3/4	24 1/2	20 1/2
5	4 1/4	12	10	25	20 3/4
5 1/4	4 1/4	12 1/4	10 1/4	25 1/2	21 1/4
5 1/2	4 1/2	12 1/2	10 1/2	26	21 3/4
5 3/4	4 3/4	12 3/4	10 1/2	26 1/2	22
6	5	13	10 3/4	27 1/2	23
6 1/4	5 1/4	13 1/2	11 1/4	28	23 1/4
6 1/2	5 1/2	14	11 3/4	29	24 1/4
6 3/4	5 1/2	14 1/2	12	30	25

CAPACITY CONVERSION U.S. GALLONS TO LITERS

Gallons	0	1	2	3	4	5
	Liters	Liters	Liters	Liters	Liters	Liters
0	00.0000	3.7853	7.5707	11.3560	15.1413	18.9267
10	37.8533	41.6387	45.4240	49.2098	52.9947	56.7800
20	75.7066	79.4920	83.2773	87.0626	90.8480	94.6333
30	113.5600	117.3453	121.1306	124.9160	128.7013	132.4866
40	151.4133	155.1986	158.9840	162.7693	166.5546	170.3400

MyMopar.com

stains and any stains of undetermined origin). Wipe off as much of the staining material as possible with clean cheesecloth. Using K2R aerosol spotlifter, or equivalent, spray stained area from a distance of 8 to 10 inches. Allow to dry (a white powder will form). Brush or vacuum powder from surface. Repeat operation should any stain remain.

Entire Insert—Cleaning Only—(Waterspots, dirt, foodstains, coffee and other water borne stains). Vacuum or brush off as much of the staining material as possible. Shield adjacent cushion or back (not to be cleaned) to prevent wetting. Use a wiping motion outward from the contaminated area to the edges of the insert with clean lukewarm water and clean cheesecloth. Rub with water until entire insert is wet. **Do not soak insert.** If clear water did not remove soil, use cleaner D-5, or equivalent, diluted one part cleaner to one part water and again clean entire insert.

Entire Insert or Pipe—Cleaning Only—(Grease, oil, adhesive, crayon, lipstick and similar stains). Wipe off as much of staining material with clean cotton cheesecloth. Wet another piece of clean cheesecloth with the recommended spot remover and fabric cleaner, or equivalent and squeeze out excess cleaner until cheesecloth is drip free. Use a wiping motion outward from the stained area to the edges of the pipe or bisquit and clean complete area. Unfold cheesecloth to expose clean areas frequently so staining material being removed is not re-deposited on fabric. Continue until foreign matter is no longer visible and entire fabric cover or individual pipe or bisquit is dampened. In cases of severe staining, a second cleaning may be required. Be sure to use the minimum amount of solvent required to clean affected area. **Excessive solvent may damage the foam underpadding.**

Oil and Water Repellent Application—The cleaned area must be completely dried before applying repellent. **Perform following operation only in a well ventilated area. Avoid prolonged breathing of vapors or contact with eyes.** Using Scotchgard Fabric Protector, or equivalent, hold spray can 6 to 8 inches from fabric and with slow back and forth sweeping motions, spray fabric until evenly wet. **Be sure to overlap spray patterns.** Repeat spraying operation with a spray pattern perpendicular (at 90 degrees) to the first application. Allow to dry for a minimum of one hour before fabric is sat on.

Spots and Stains—When using water to remove a spot, be sure to wash entire section after spot has been removed to avoid water stains. Before cleaning seats, door panels, headliner, etc., remove as many spots as possible.

Use a putty knife to break up and remove encrusted foreign matter. Vacuum thoroughly.

Apply the recommended spot removing agent with a clean cloth or sponge. Work in a wide circle to prevent making a ring and work toward center.

Surface Spots—Brush out with a small hand brush, using care not to damage fabric when brushing.

Deep Penetrating Spots—Apply the spot removing agent by brushing. When spot is thoroughly worked and saturated, use high air pressure to blow dirt down through material. Occasionally the entire spot may not be removed and it will then be necessary to cover the area with a light application of dye.

Water Stains—Water stains in **fabric materials** can be removed with a cleaning solution made from one cup of ordinary table salt and one quart of water. Vigorously scrub solution into stain and rinse with clean water. Water stains in **nylon and other synthetics** should be removed with a commercial type spot remover compounded for the specific material being cleaned.

Mildew—Clean area around mildew with warm suds. Rinse with cold water, soak mildew area with solution of one part common table salt and two parts water, then wash with the recommended upholstery cleaner.

Rust Stains—Keep rust remover solution away from your skin. Wash hands immediately if exposed. Clean extra well under fingernails. Read instructions on the bottle before using. Wrap a small strip of cloth around each button to avoid leaving a ring on upholstery material.

Dampen the stained area with water. Apply a commercial rust remover solution. Sponge with clean water to clean rust from upholstery buttons. Moisten buttons with a few drops of water applied with a small piece of sponge or cloth. Apply one or more drops of rust remover. Fast dry clean areas with heat lamps.

Chewing Gum and Tar—Avoid using spotting or cleaning solution that will dissolve or soften gum or tar. Place a cube of ice on gum or tar to harden it. Remove as much as possible with a dull knife when it is in this hardened state. Moisten remainder with cleaning fluid and scrub clean. In some cases soak with cleaning fluid and blow the stain through using high air pressure.

Ice Cream and Candy—Use a putty knife to remove as much substance as possible. Use care not to damage fibers of upholstery. Most candy has a sugar base and can be removed by rubbing area with a cloth wrung out in warm water. An **oily type of candy,** after using warm water, should be cleaned with an upholstery type cleaner that will emulsify with the oil. Rinse with water and remove remaining stains with cleaning fluid.

Bloodstains—Never use warm or hot water. Use a clean cloth wrung out in cold water and rub

MyMopar.com

the stain. If stain is not completely removed, use spot remover or vinyl cleaner and apply with a brush.

Wine or Alcohol—Avoid use of soap. Scrub stain with a cloth moistened in luke warm water. Remove remaining stains with a regular cleaning solution.

Shoe Polish—Scrub area with a cloth saturated with cold water. Remove wax base polishes by sponging with spot remover.

Grease, Oil, Lipstick and Related Stains—Use spot remover to avoid leaving a ring. Cleaning from outside of spot and work toward center. When spot has been removed, dry fabric with a clean cloth.

Urine—Use clean cloths for each operation. Saturate cloth with lukewarm soap suds (mild neutral soap) and sponge stain. Using cold water and a cloth, rinse area thoroughly. With a solution of one part household ammonia and five parts water, saturate a cloth and apply to stain for one minute. Rinse with a wet cloth.

Nausea—Use clean cloths for each operation. Sponge area with a cloth dipped in cold water. Wash lightly with lukewarm water and soap (mild neutral). Dip a cloth in cold water and rub affected area. If any stain remains, clean with a cloth moistened with a volatile cleaner.

Headliners—Cloth Type—Mix a solution of water and a foaming type upholstery cleaner (as shown on the container) to produce thick suds. Use **only** foam when cleaning, as saturation with liquids may result in streaks, spots or shrinking.

On nap type, lay down nap, usually left to right. Do not stop, when washing a headliner. Complete the entire operation at one time using the same cleaning solution.

Starting in a rear corner, clean only one or two sections at a time. Thoroughly work suds into cloth with a nautral sponge. Use circular or short back and forth strokes to remove all dirt. When the sponge glides easily, leaving an even distribution of foam and headliner appears clean, finish cleaning with sweeping motions in one direction.

Hard Board Type—Apply a solution of upholstery cleaner and water with a sponge. Use circular or short back and forth stroke and wipe with a dry clean cloth. If headliner is extremely dirty, wash with vinyl cleaner using the same procedure.

Vinyl Type—Apply vinyl cleaner with a sponge (or if extremely dirty scrub with a brush) wipe clean with a dry clean cloth.

Seats and Door Panels—Mix one pint upholstery cleaner to one gallon of water. If extremely dirty, add more cleaner to solution.

Do not soak around buttons. Scrub thoroughly with a brush or sponge. **Avoid over soaking the material,** do one section at a time only. Frequently stains will be evident when material is damp but will disappear when dry. Use care not to damage fabric by attempting to brush out "stubborn" spots. Spots should be removed before washing. After part has been scrubbed, remove loosened dirt by rubbing area briskly with a clean cotton towel or soft rag. Make final strokes on one direction.

Nylon or Synthetic Fabrics—For average conditions use methods and materials used in washing cloth upholstery. When material is extremely dirty, use multi-purpose cleaner full strength and a stiff scrub brush. Scrub thoroughly in all directions. Wipe off dirt and excess cleaner with a clean cotton towel or soft rags.

Leather, Leatherette or Vinyl Fabric—Use multi-purpose cleaner full strength and a stiff scrub brush. Apply to surface and let set for two (2) minutes then scrub thoroughly. Clean between all seams and in all cracks and underneath beading. Wipe off dirt and excess material with a clean cotton towel or soft rag.

Package Shelf-Hard Board Type—Clean using a solution of upholstery cleaner.**Avoid water logging the backing, dry immediately.**

Vinyl Type—Clean using mutli-purpose cleaner. Dry with clean toweling or rags.

Side Cowl Trim Panels—Leather—Vinyl—Metal Types—Use multi-purpose cleaner full strength. Use a stiff brush and apply to surface, let set (2) two minutes then scrub thoroughly. Clean seams, cracks and beneath beading. Dry with a clean soft towel or rag.

Glove Compartment—Some glove compartments are made of a cardboard type material. Do not waterlog.

Vacuum thoroughly. Clean with upholstery cleaner or vinyl cleaner.

Rubber Mat—Vacuum thoroughly and clean with upholstery cleaner or multi-purpose cleaner. Use toweling or rags to remove dirt and excess cleaner.

Carpeting—Thoroughly vacuum. Mix one pint of upholstery cleaner to one gallon of water. If carpet is faded, discolored or spotted, add upholstery tint to this solution. To determine the right color shade, add tint in small quantities only. Test by dipping a white rag into solution, wring out and inspect shade. **The dye will dry a shade or two darker.** With a stiff brush apply solution and scrub carpet vigorously. Lay nap down in one direction. When dry, fluff carpets by rubbing with a dry brush.

Salt Stains—Vacuum carpet thoroughly. Use a solution made from water and a heavy concentration of ordinary table salt. Soak the stained area to loosen embedded salt (use a wire brush, if necessary). Wash entire carpet with the recom-

MyMopar.com

mended cleaner. Additional washing may be necessary for satifactory results.

Luggage Compartment—Remove all items from compartment. Use a steel brush to loosen rust and caked dirt and vacuum thoroughly. Wash with upholstery cleaner or multi-purpose cleaner and dry with clean toweling or rags.

Cargo-Area (Station Wagon)—Follow same procedure used for Luggage Compartment.

Color Restoration or Change—Tints and dyes should be applied by reliable experienced personnel. Dyes or tints can be applied when stains persist, after cleaning, or a change in color is desired. **The instructions for mixing and applying the color must be followed precisely.** Use only those recommended for the exact material being worked on.

Leather and Vinyl Sealers—To repair holes cut material about 1/2 inch larger than area being repaired. Position patch under hole and apply sealer to contacting areas. Apply masking tape over tear to hold edges in place until sealer dries. After sealer has dried, remove tape and trim all rough edges. Fill visible cracks with sealer.**Use a step application procedure in filling deep cracks.** After sealer has thoroughly dried, sand lightly with 400 grade sandpaper until smooth. Apply color to repaired area.

POLISHING—Acrylic Finishes—Polish at least twice a year to remove all foreign film. When polishing use one pad, made from cheesecloth or an old "turkish" towel, to apply polish and another to remove dried film. Test area by rubbing fingers over polished surface. If not thoroughly cleaned, smears of polish will show.

Sand Scratches—Overspray—Foreign Material—Minor conditions can be removed using the following procedure:

(1) Using oleum spirits, mineral spirits or kerosene hand sand affected surface with No. 600 paper.

(2) Remove all sanding sludge.

(3) Machine polish the sanded surface using rubbing compound until the surface is completely free of scratch marks. Blend with adjacent areas.

(4) Buff surface with a clean lambs wool pad using a liquid type final polish. If the appearance of the polished area is noticeably different than adjacent areas, completely buff the adjacent panels. If necessary, polish complete side or horizontal surfaces to assure uniform appearance.

(5) Use a clean, soft, cotton cloth, **do not use cheesecloth**, to hand clean all inaccessible areas.

(6) Remove all polish or rubbing compound from mouldings, medallions, name plates or any other exterior ornamentation.

Bright Metals—When cleaning anodized aluminum, use care not to rub through the anodized coating. All bright metal should be thoroughtly cleaned at least twice a year.

The product manufacturer recommendations should always be followed. Clean metal thoroughly, removing all traces of cleaner from corners. Apply and rub out a coat of good body wax. During winter months and in areas in which salt is used, do not rub out wax.

Frequent washing of bright metals by steam necessitate more frequent applications of wax.

TIRES

Do not clean tires with scouring powder, steel wool or other abrasive type cleaners. Clean white sidewall tires with a stiff bristle brush and white sidewall cleaner, or multi-purpose cleaner and rinse with clear water. Scuff marks can be dressed down by sanding lightly with 400 sandpaper.

GLASS

Do not use putty knives, razor blades, steel wool, or other metal objects to remove deposits from glass.

Interior glass surfaces, including convertible backlight, should be thoroughly cleaned weekly to remove all traces of smoke and other films.

Exterior glass surfaces, including convertible backlight, are best cleaned with the use of a commercially made cleaner. **Do not** scrape off smears from bugs, road tars or other similar objects, use warm water or the recommended solvents to remove.

During the winter months, snow, ice and frost can be removed with a plastic or rubber type scraper, or with a commercially made solvent.**Do not use metal objects to remove deposits from glass.**

DRAIN HOLES

The drain holes, in the bottom of cowl plenum chamber, doors and floor sills (rocker panels) should be inspected regularly to insure unobstructed drainage. Remove road tars, mud and other foreign matter immediately. Should bare metal be exposed, surface treat metal and refinish.

The drain holes in the quarter panel well areas are sealed with a removable plastic plug. The plugs should only be removed whenever it is necessary to clean or drain fluids from the well area.

LUBRICATION

To maintain ease of operation, the hood, door, deck lid and tail gate hinges should be lubricated with the recommended lubricants at the recommended intervals. Refer to the Body Lubrication Unit for type of lubricant and lubrication points.

MyMopar.com

BODY LUBRICATION

INDEX

	Page
Body Maintenance	1
Deck Lid Hinges	4
Deck Lid Latch	3
Door Hinges	1
Door Locks and Linkage	2
Door Lock Ratchet and Striker	2
Door Remote Links	3
Fuel Tank Access Door Hinge	5
Hood Hinges	1
Hood Lock and Safety Catch	1
Lock Cylinders	2
Tail Gate Door	4
Tail Gate Wiper Linkage	5
Window Regulators	3

BODY MAINTENANCE

Body and other operating mechanisms should be inspected, and relubricated as needed. This is necessary to maintain ease of operation and to provide protection against rust and wear.

Prior to applying any lubricant, wipe the parts clean to remove dust and grit. After lubricating parts, remove excess oil or lubricant.

Relubricate mechanisms as outlined in the following paragraphs. **Where Lubriplate is specified, use a smooth, white body hardware lubricant comforming to NLGI grade 1. Chrysler Parts Lubriplate, Part Number 1064768 or equivalent, is a suitable lubricant.**

Where Door Ease Lubricant is specified, use a stainless wax type lubricant such as Chrysler Parts Door Ease, Part Number 774512 or equivalent.

HOOD LOCK, RELEASE MECHANISM AND SAFETY CATCH

Lubrication of the hood latch release mechanisms and safety catch is of vital importance and should be inspected, cleaned and lubricated every 6 months to assure ease of operation and freedom from binding.

All Models

Apply Multi-Purpose Lubricant NLGI grade 2 EP, such as Multi-Mileage Lubricant, Part Number 2525035 or equivalent, sparingly to all sliding contact areas of latch and release lever, and ends of hood lock release links, if so equipped. (Figs. 1, 2, 3 and 4).

Work lubricant into the lock mechanism until all frictional surfaces are covered. Also apply a film of the same lubricant to the pivot contact areas of the safety catch (Figs. 1, 2, 3 and 4).

Hood Hinges (All Models)

Apply engine oil to all link or hinge pivots and Lubriplate or equivalent, to gear teeth and sliding contact areas (Figs. 5, 6 and 7).

Door Hinges (All Models)

On all hinges, apply engine oil to hinge pin ends (Figs. 8, 9 and 10).

On lower hinges, in addition, apply engine oil to spring ends and contact areas.

CAUTION: Avoid lubricant on roller surfaces of

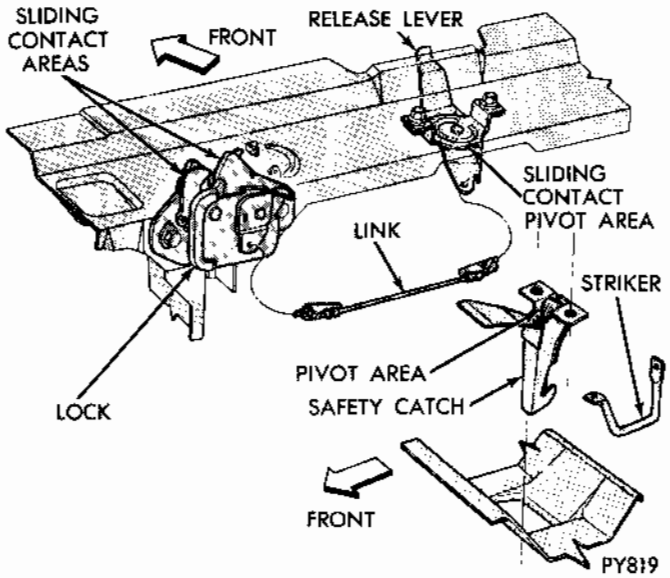

Fig. 1 Hood Lock Lubrication (Dart Models)

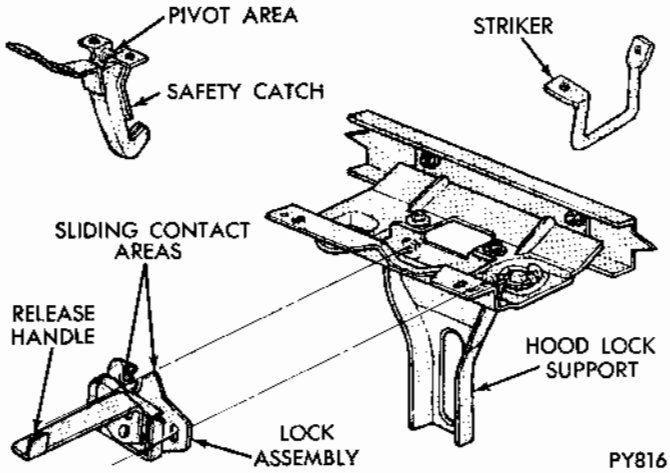

Fig. 2 Hood Lock Lubrication (Challenger Models)

MyMopar.com

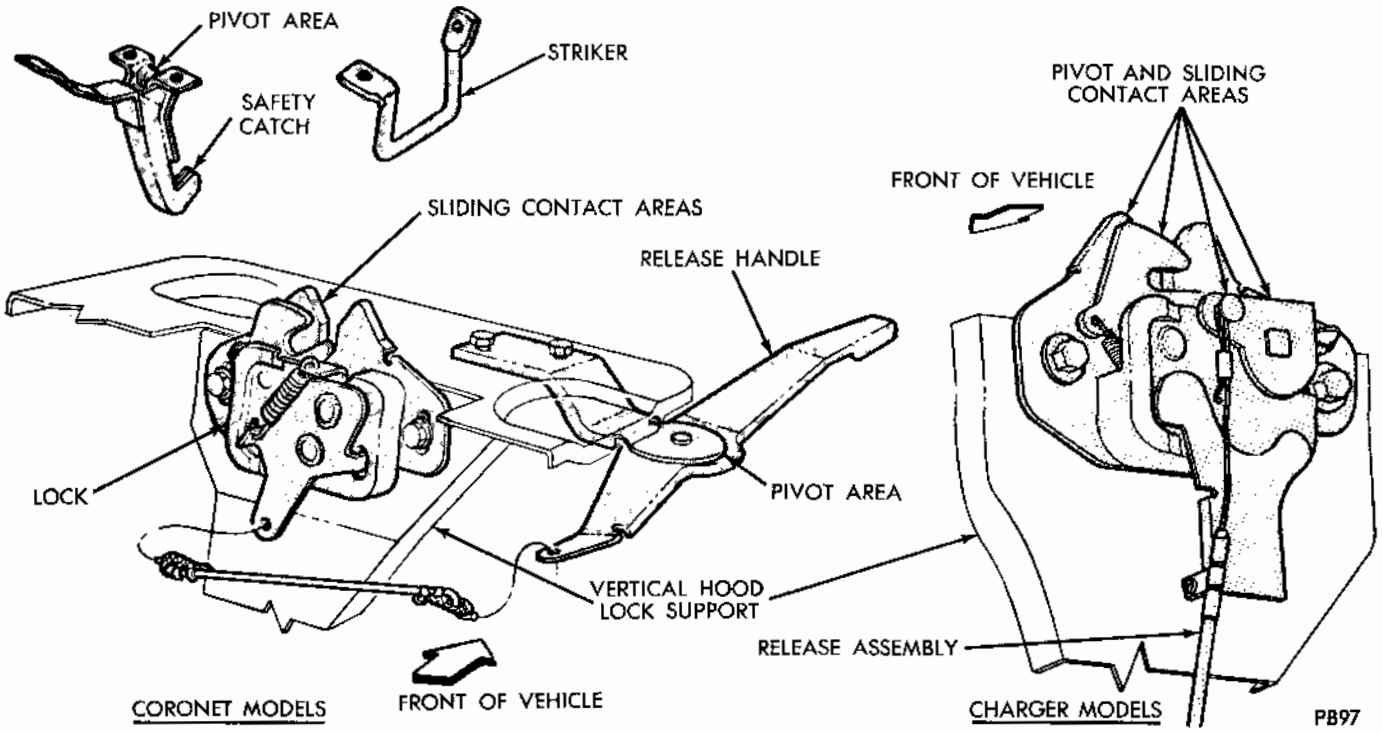

Fig. 3 Hood Lock Lubrication (Coronet-Charger Models)

hinge arm and roller on front and rear door lower hinges.

Lock Cylinders

When necessary, apply a thin film of Lubriplate or equivalent, directly to key. Insert key into lock and actuate several times. Wipe excess lubricant from key. Particular attention should be given to external lock cylinders during fall and winter months to insure protection from water and ice.

Door Lock Ratchet and Striker Bolt

Apply light engine oil, sparingly, to ratchet pivot areas (Fig. 11). Wipe off excess oil. Apply Door Ease Lubricant or equivalent, to contact area of striker bolt.

Door Locks and Locking Control Linkage (All Models)

If necessary to inspect operation of and relubricate these parts, remove door trim panel. Apply a film of Lubriplate or equivalent, to all pivot and

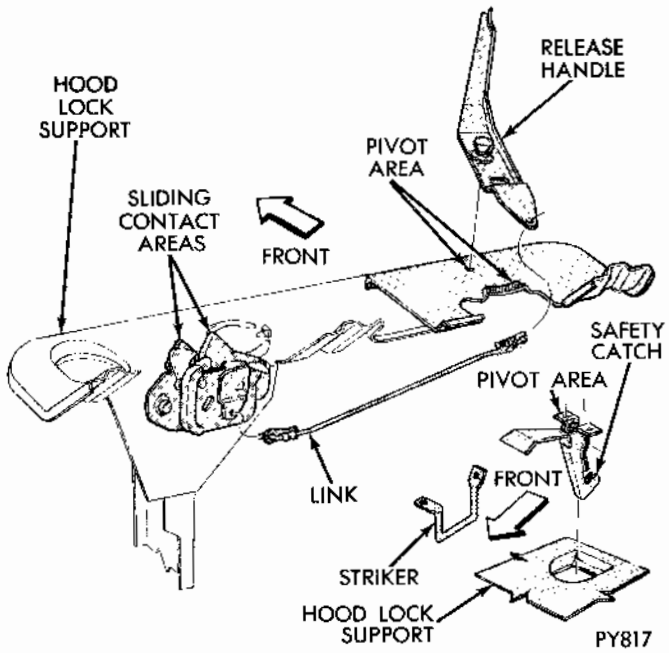

Fig. 4 Hood Lock Lubrication (Polara Models)

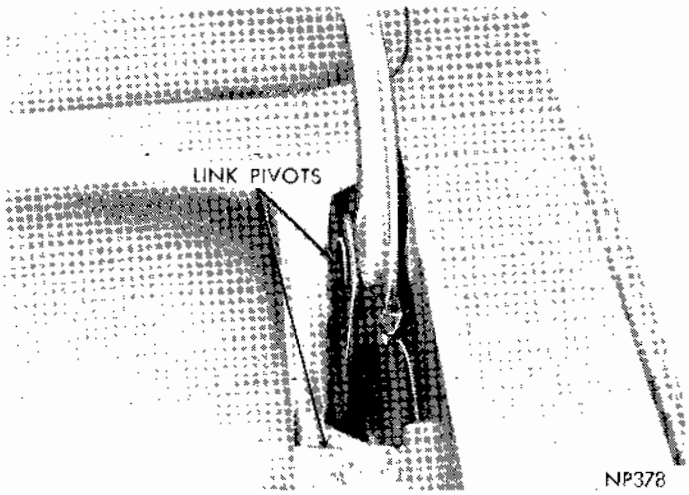

Fig. 5 Hood Hinge Lubrication (Dart Models)

MyMopar.com

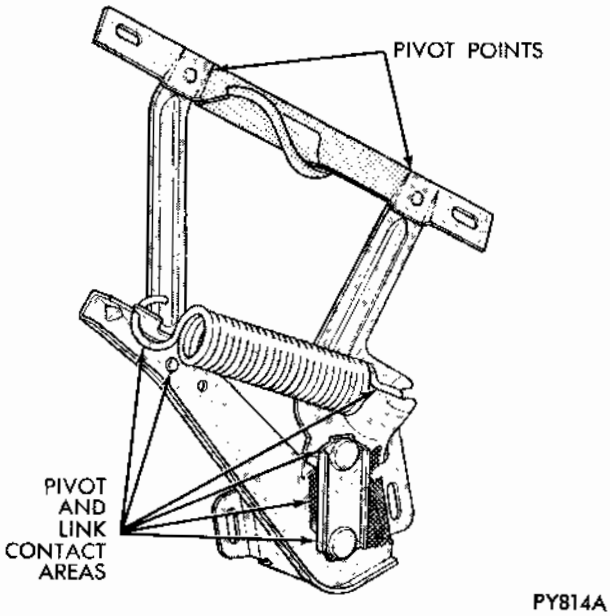

Fig. 6 Hood Hinge Lubrication (Challenger and Coronet Models)

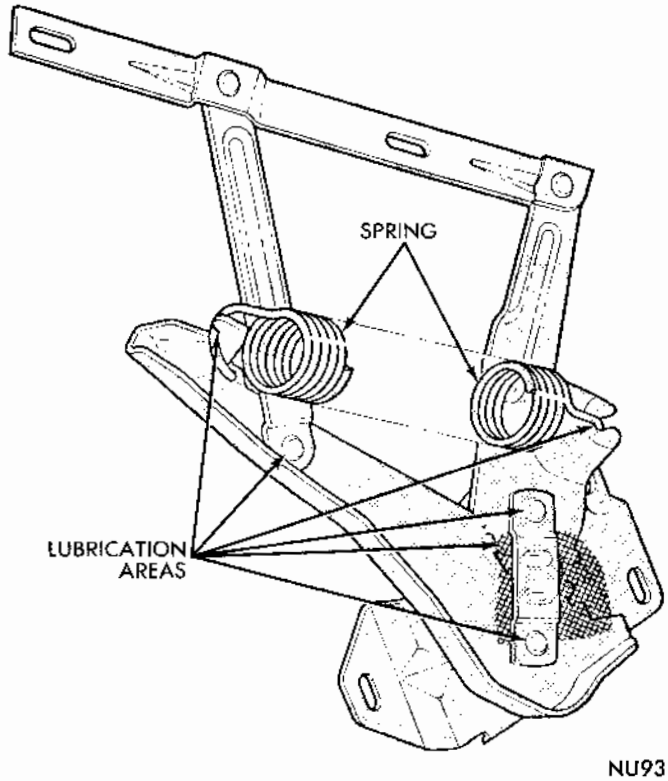

Fig. 7 Hood Hinge Lubrication (Polara Models)

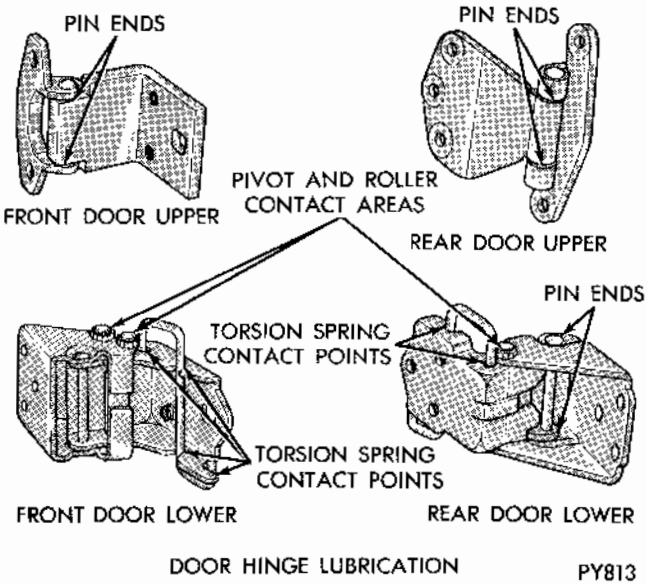

Fig. 8 Door Hinge Lubrication (Dart-Challenger Models)

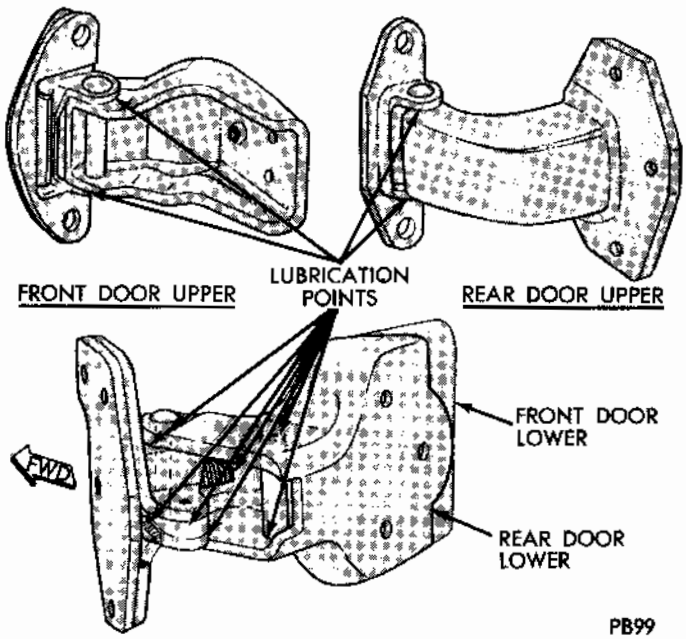

Fig. 9 Door Hinge Lubrication (Coronet Models)

sliding contact areas.

Door Remote Control Link (All Models)

If necessary to inspect operation of and relubricate these, remove door trim panel. Apply a film of Lubriplate or equivalent, to all link end pivots.

Window Regulator, Glass Lower Frame(All Models)

If necessary to inspect operation of and lubricate these parts, remove door or quarter trim panel. Apply Lubriplate or equivalent, sparingly, to regulator sector gear teeth, assist spring and pivots. Apply same lubricant sparingly, to glass lower frame roller slide tracks and roller and bracket assembly pivot points.

Deck Lid Latch (All Models)

Apply Lubriplate or equivalent, sparingly, to all pivot and sliding contact surfaces (Fig. 12).

MyMopar.com

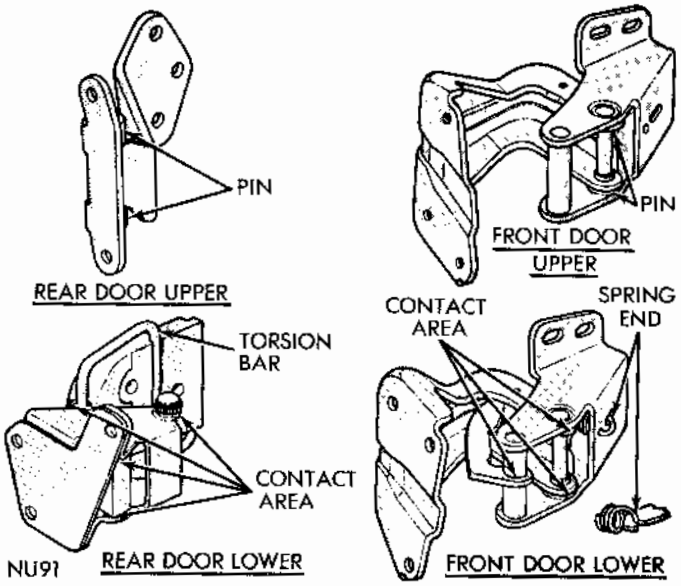

Fig. 10 Door Hinge Lubrication (Dodge Models)

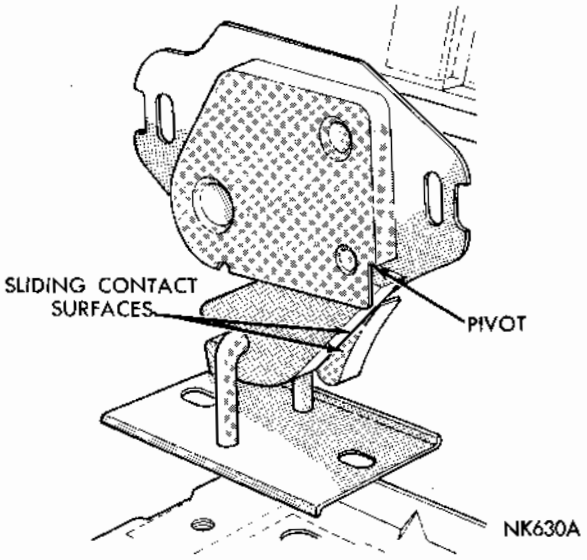

Fig. 12 Deck Lid Latch. Lubrication

Deck Lid Hinges (All Models)

Apply Lubriplate or equivalent, sparingly, to all torsion bar support bearing areas and interior surface of torsion bar slide (Figs. 13, 14, 15 and 16).

Also, apply same lubricant sparingly, to contact surface on hinge cam slide.

Tailgate Door Lubrication

Apply engine oil sparingly to upper and lower hinge pivot pins. Lubriplate or equivalent,to support links, check strap links, link contact areas and inner pivot or sliding contact surfaces of tailgate and door lock.

Lubricate torsion bar and check arm mechanism with a Multi-Purpose Lubricant NLGI grade 2 EP, such as Multi-Mileage Lubricant Part Number

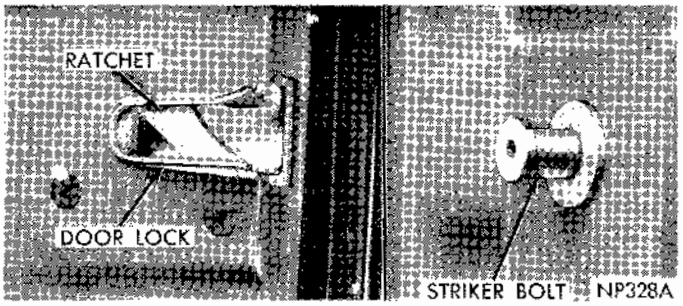

Fig. 11 Door Lock Ratchet and Stricker Bolt

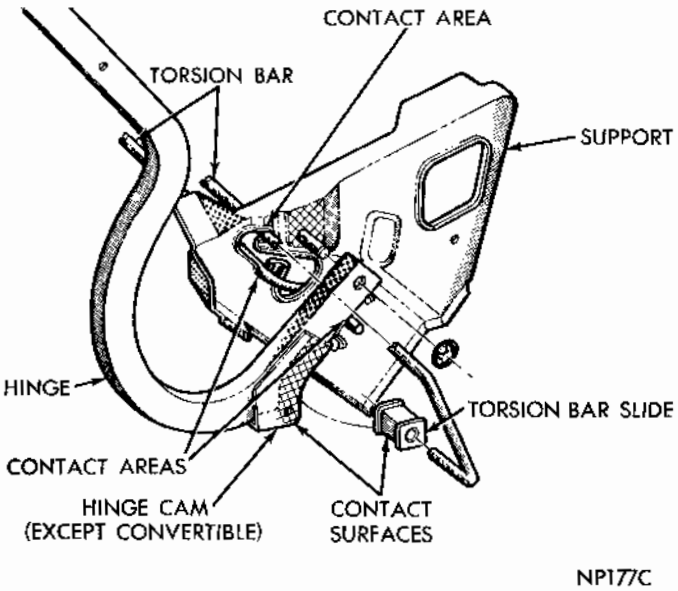

Fig. 13 Deck Lid Hinge Lubrication (Dart Models)

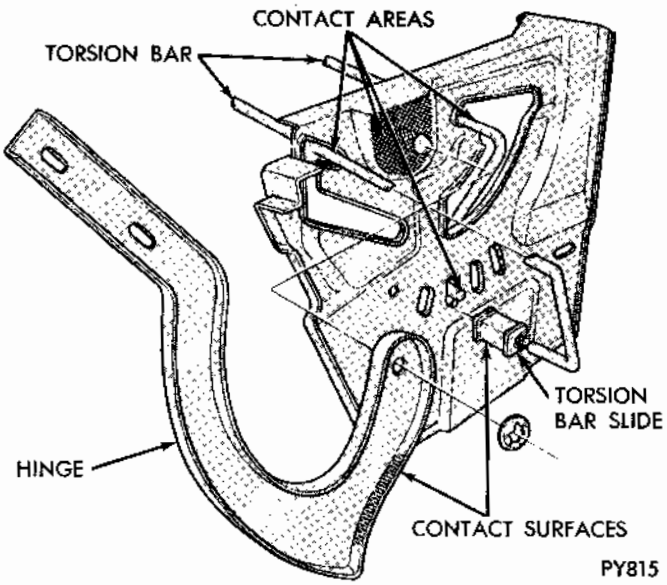

Fig. 14 Deck Lid Hinge Lubrication (Challenger Models)

2525035 or equivalent. Apply stainless wax type stick lubricant such as Chrysler Parts Door Ease Part Number 774512 or equivalent, to tailgate

MyMopar.com

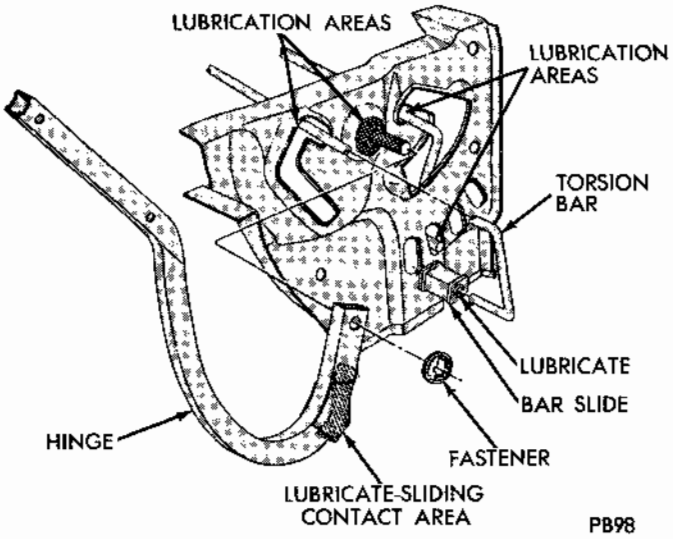

Fig. 15 Deck Lid Hinge Lubrication (Coronet Models)

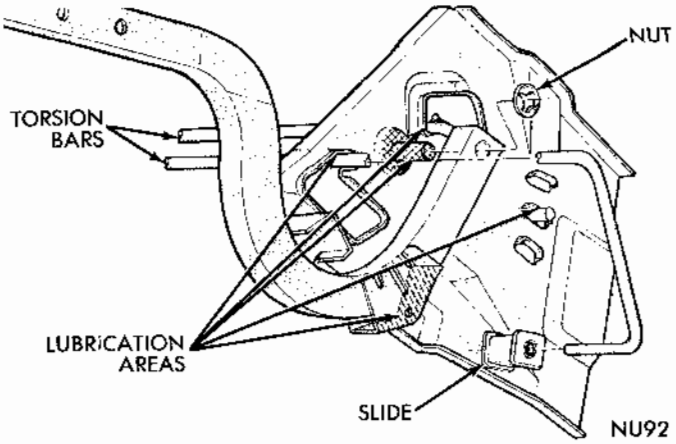

Fig. 16 Deck Lid Hinge Lubrication (Polara Models)

latch striker plate and bolt (Fig. 17 or 18).

Tail Gate Window Wiper Linkage

To lubricate this linkage, remove tail gate trim panel. Apply Lubriplate or equivalent, sparingly, to the sliding contact areas between the actuator arm and pin, and between the actuating arm and regulator sector gear.

Do not contaminate wiper blades with lubricant.

Fuel Tank Access Door Hinge (All Station Wagon Models)

Apply Automotive Multi-Purpose Lubricant, NLGI grade 2 EP sparingly, to all pivot areas and to spring end contact areas (Fig. 19).

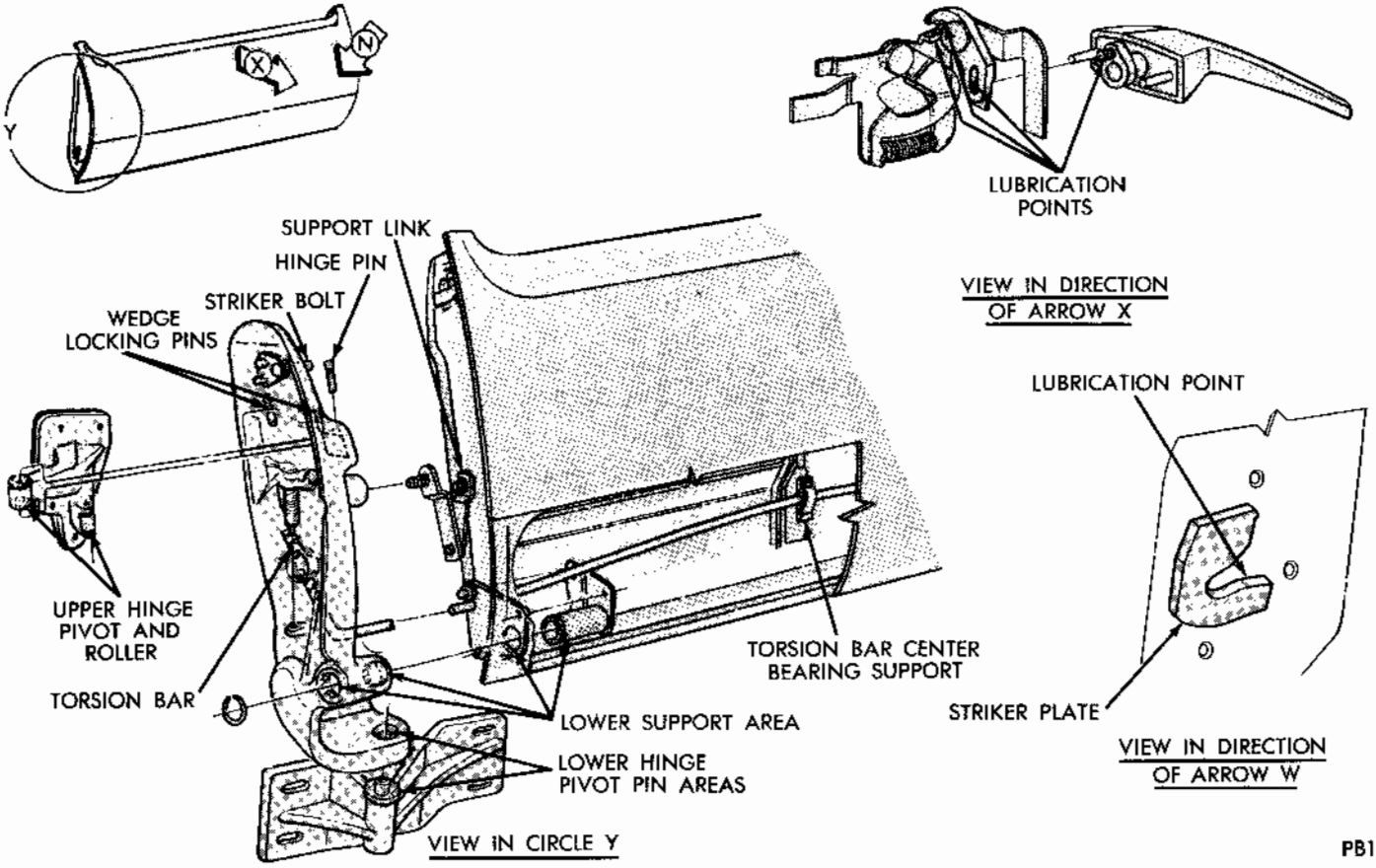

Fig. 17 Tail Gate Door Lubrication (Coronet Models)

MyMopar.com

STRIKER BOLT
LOCK
SUPPORT LINK
UPPER HINGE PIVOT PIN
TORSION BAR
SUPPORT AREA
SPRING WASHER AND ROLLER
LOWER HINGE PIVOT PIN AREA
NU262

Fig. 18 Tail Gate Door Lubrication (Polara Models)

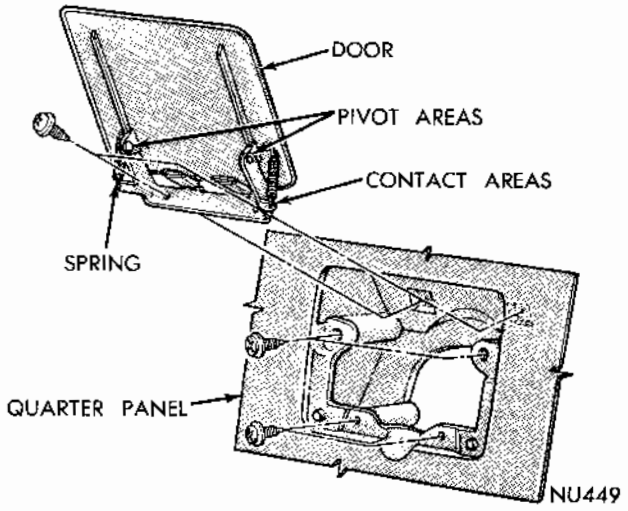

Fig. 19 Fuel Tank Access Door Hinge (Station Wagon)

MyMopar.com

SHEET METAL-DOORS

DODGE

INDEX

	Page
BUMPERS	6
COWL	
Seal-Top Panel	1
Trim Panel-Side	1
DECK LID	
Alignment	18
Hinge	18
Lock	18
Cylinder	18
Vacuum Operated	18
Replacement	18
Torsion Bars	19
Weatherstrip	19
DOORS	
Alignment	8
Arm Rests	10
Handles-Inside	10
Outside	13
Hinge	8
Lock Assembly	
Cylinder	11
Electric	12
Adjustment	12
Replacement	12
Lock and Switch	12
Remote Control Switch	13
Latch Push Rod	12
Trim Panels	10
Watershields	10
Weatherstrips	13
Belt-Outer	14
Hardtop Door	14
Roof Rail	14
Sedan-Station Wagon	13
Windcords	14
FENDERS	
Alignment	4
Replacement	4
Wheelhouse	4
OUTSIDE AIR INLET VENT	
Control Cable	1
Door	2
GRILLE	8
HOOD	
Alignment	3
Hinge	4
Lock	4
RADIATOR YOKE SUPPORT	6
Air Shield and Cross Bar	6
TAILGATE	15
Alignment	15
Lock Assembly	17
Cylinder	17
Linkage	17
Replacement	16
Roof Rear Air Deflector	18
Trim Panel	16
Torsion Bar	20
Weatherstrips	20

COWL TOP PANEL SEAL

The cowl top panel seal (Fig. 1) is fastened to the panel by retainers moulded into the seal.

SIDE COWL TRIM PANEL

The side cowl trim panel (Fig. 2) is attached to the panel with screws and at the rear lower edge under the floor sill step plate. A silencer pad is used between the trim panel and cowl panel.

Build-Up and Installation

(1) Position cowl side trim panel extension under windshield garnish moulding and install screw.

(2) Apply cement to trim panel and position insulation on cemented area. Hand press to assure positive adhesion and position spring nut on panel.

(3) Position trim panel under clip at upper front and to cowl side inner panel. Install retaining screws.

(4) Install floor sill inner moulding over panel end and install screws.

OUTSIDE AIR VENT

CONTROL CABLE

Replacement

The outside air inlet vent control cable, housing and knob is serviced as an assembly. The cable housing shank has two flat edges, indexing with corresponding edges in the panel and is retained on the panel with a nut at the rear. The housing is attached to the vent door bracket with a clip and the coiled cable end is positioned over a pin on the door.

Adjustment

Door adjustment is controlled by the cable housing attachment at the door bracket (Fig. 3). Loo-

MyMopar.com

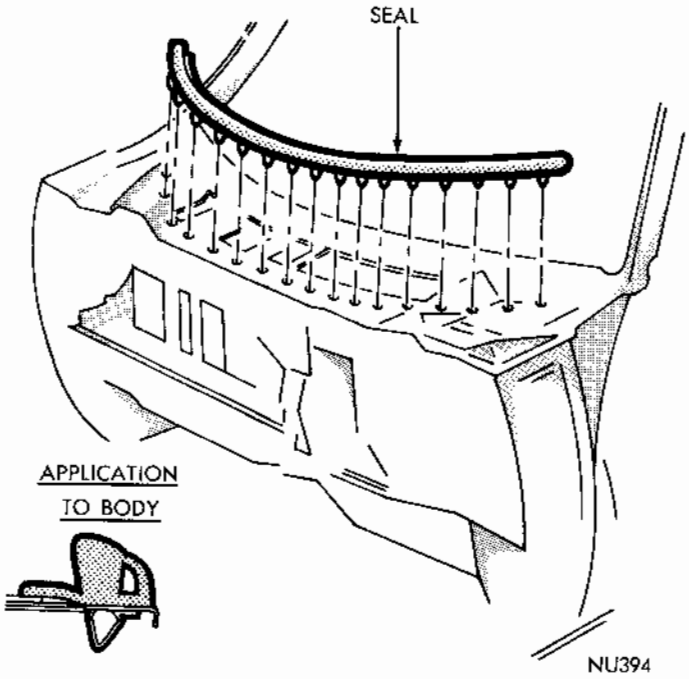

Fig. 1 - Cowl Top Panel Seal

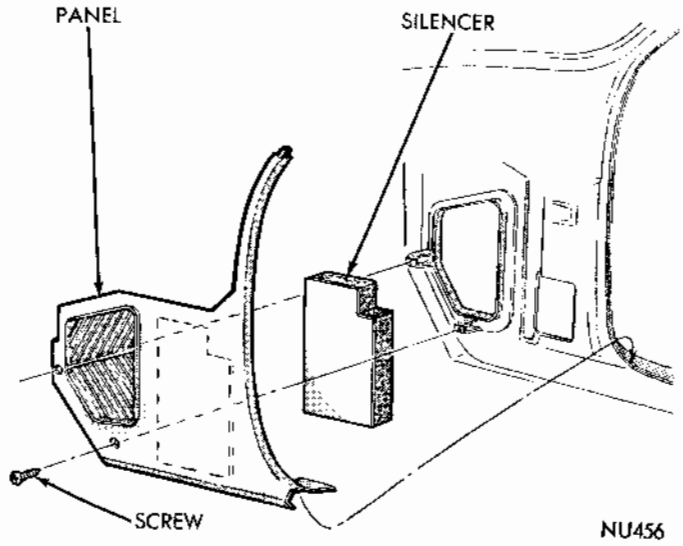

Fig. 2 - Side Cowl Trim Panel

sen clip screw attaching the housing to the door bracket and push control cable knob to the fully closed position. Holding vent door closed, pull cable housing slack out of door flange. Tighten clip screw and test operation of cable and door.

VENT DOOR

Removal (Fig. 3)

(1) Remove cowl side trim panel and silencer.

(2) Remove actuator cable housing to door bracket clip.

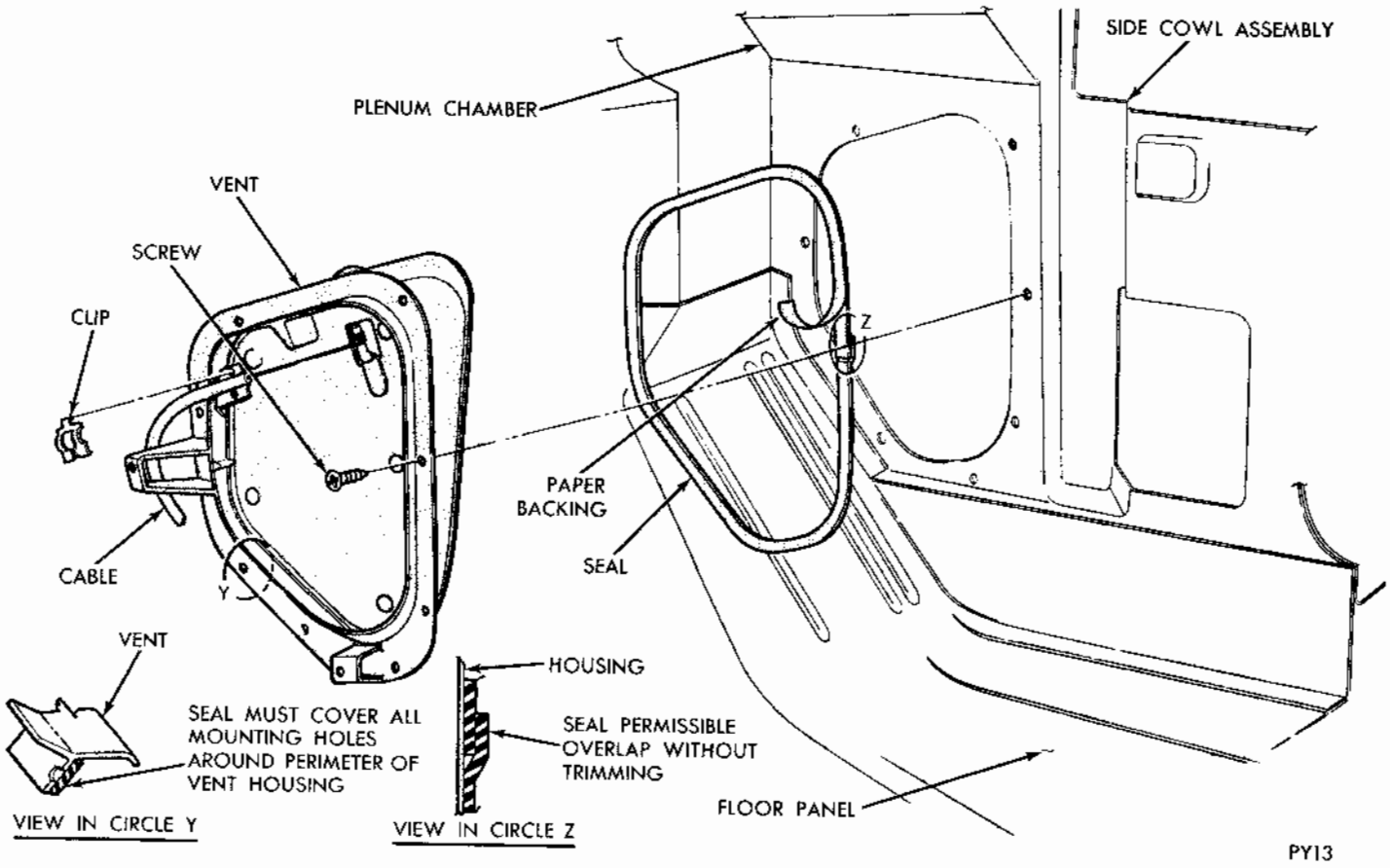

Fig. 3 - Side Cowl Air Vent

MyMopar.com

(3) Slide cable off of pin on door and out of door frame flange.
(4) Remove door to cowl side panel screws.
(5) Remove door and seal assembly and inspect seal for damage.

Installation

(1) Install spring nut to bottom of air door housing, if removed.
(2) Position seal in line with outer edge of housing flange.
(3) Position air door on cowl side panel, align attaching holes, install attaching screws and tighten progressively.
(4) Insert actuator cable assembly, through hole in door frame flange and install coiled end of cable over pin on door.
(5) Position clip over cable and attach to door bracket.
(6) Adjust vent door cable housing and install trim panel and silencer.

HOOD

ALIGNMENT

Prior to making any adjustment inspect clearances and alignment of hood sides in relation to cowl, fenders and grille. The cowl adjustment must be made first. Elongated holes in the hinge (Fig. 4) permit the hood to be moved up, down, fore and aft.

REPLACEMENT

Removal

(1) Place a protective covering over cowl and fender area.
(2) Mark outline of hinges on hood to aid in installation.
(3) Use extreme care not to permit hood to slide rearward and damage painted surfaces of the cowl and fender areas when removing hood bolts.

Installation

(1) With an assistant, position hood on hinges and install bolts loosely.
(2) Align scribe markings on hood with hinge and tighten screws lightly.
(3) Close hood and inspect hood alignment.
(4) Adjust alignment and tighten bolts 180 inch-pounds.

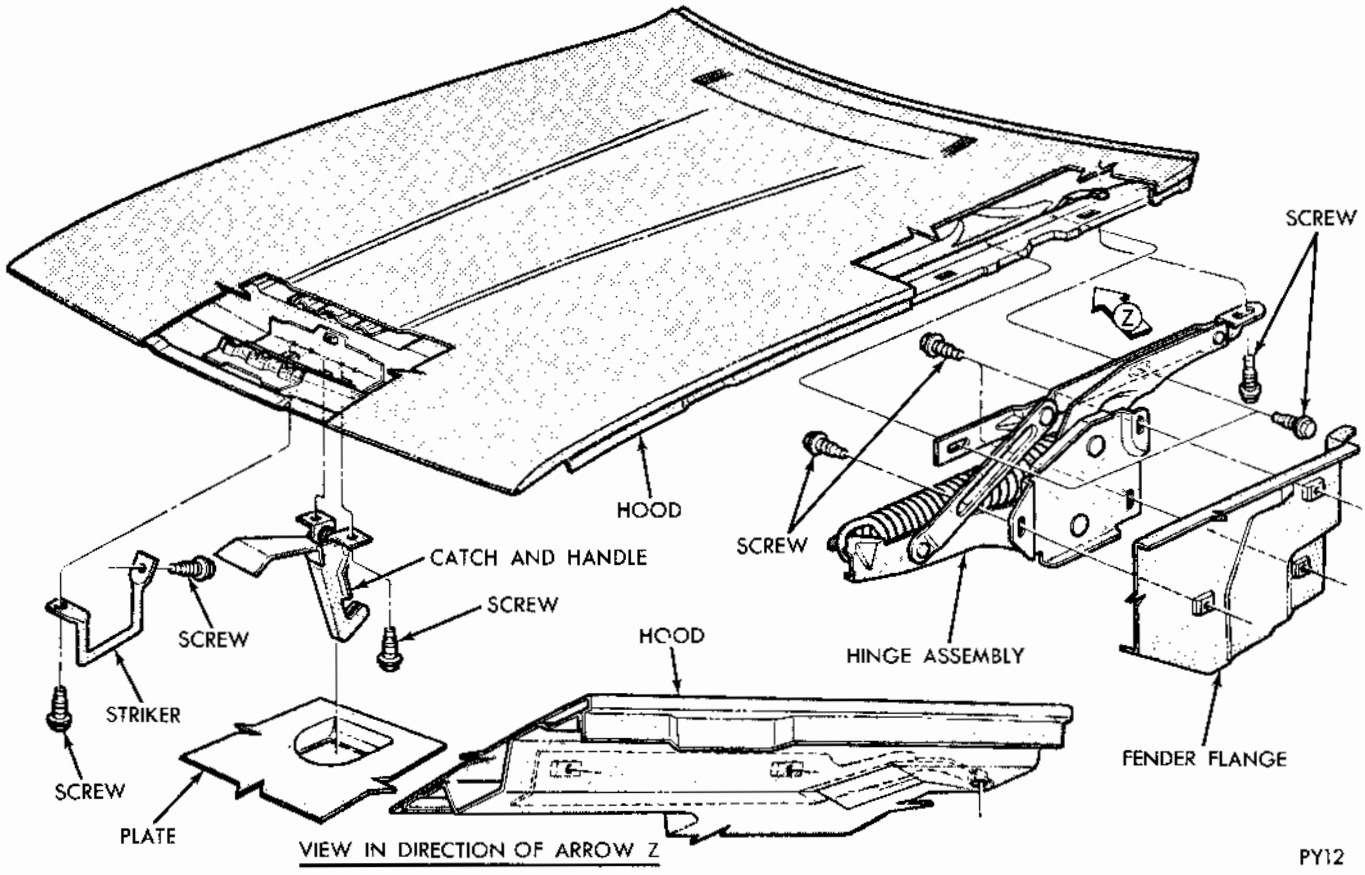

Fig. 4 - Hood Adjustment

MyMopar.com

(5) Remove protective coverings.

HINGE REPLACEMENT

The hood hinge (Fig. 4) is attached to the hood by two screws and to the fender splash shield by three screws. Prior to removing the hinge mounting screws, prop the hood into the wide opening position. The prop should be positioned so the hood cannot move rearward.

LOCK

To adjust lock (Fig. 5), loosen attaching screws and raise or lower until correct adjustment has been obtained. After making any adjustment requiring shifting of hood. always inspect hood striker and lock for alignment.

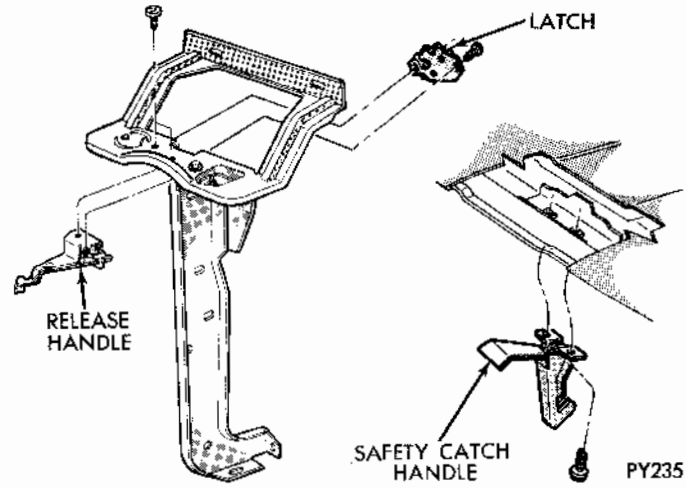

Fig. 5 - Hood Latch and Release

FENDERS

ALIGNMENT

The fender should be adjusted to provide for equal spacing at the cowl, door front edge and door panel top edge. Alignment should be made at bottom of floor sill panel, front of hood and door outer panel upper edge.

REPLACEMENT

Removal

(1) Disconnect battery ground strap.

(2) Tape leading edge of front door and cowl to fender area to avoid damaging paint.

(3) Remove front bumper assembly.

(4) Disconnect head lamp wires and remove grille extension to fender nuts.

(5) Remove fender to cowl, side sill, wheelhouse and radiator yoke nuts and screws (Fig. 6).

(6) Remove fender assembly and if necessary, mouldings, ornamentation and headlamp assemblies.

Installation

(1) Install head lamps, mouldings and ornamentation.

(2) Carefully position fender on studs at cowl side area and align fender with mounting holes in radiator yoke. Install all retainer screws and nuts.

(3) With fender correctly positioned, tighten screws and nuts securely.

(4) Connect head lamp wires and install grille to fender nuts. Connect battery ground strap.

WHEELHOUSE

Remove wheelhouse assembly (Fig. 7).

(1) Raise hood and disconnect all brackets and clips attached to the wheelhouse in engine compartment.

(2) Raise front end of car and remove wheel assembly.

(3) From underside of fender, remove all wheelhouse mounting bolts.

(4) Remove wheelhouse from car.

Replacement

(1) Place housing in position under fender.

(2) Install mounting bolts loosely.

(3) Line housing up correctly and tighten mounting bolts.

(4) Replace wheel assembly.

(5) Lower front end of car.

(6) Connect all brackets and clips in their proper position on wheelhouse in engine compartment.

MyMopar.com

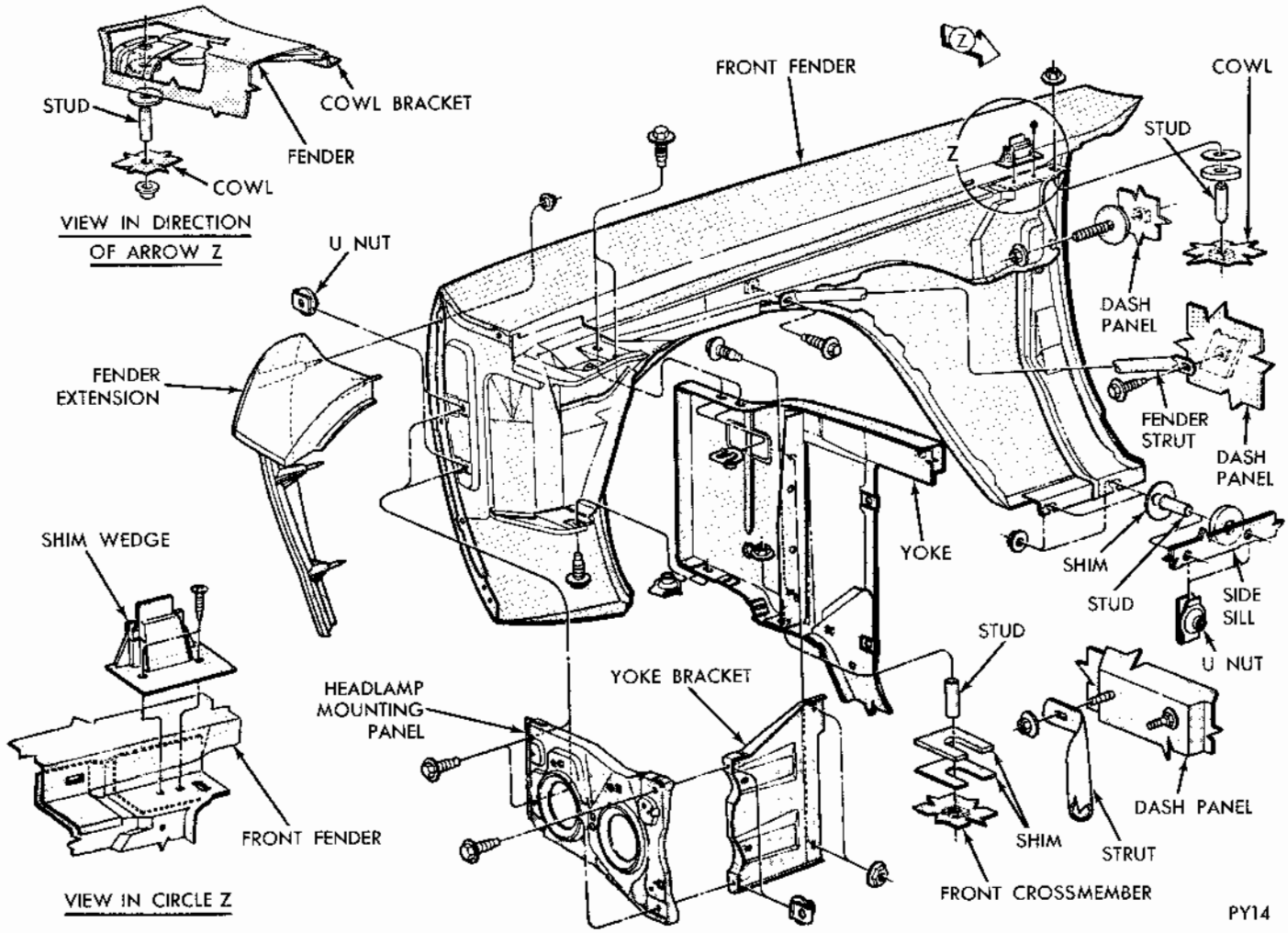

Fig. 6 - Fender Attachment

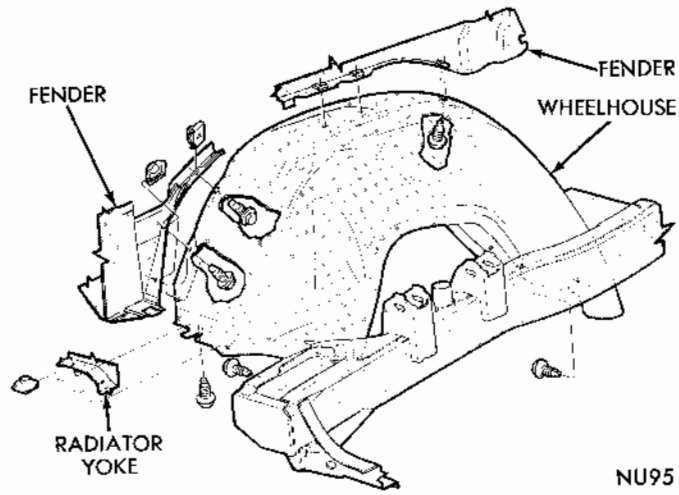

Fig. 7 - Wheelhouse Assembly

MyMopar.com

RADIATOR YOKE SUPPORT

Removal

(1) Remove radiator assembly.

(2) Remove hood lock striker bar, horn and head lamp wiring from yoke support.

(3) From under the fenders remove wheelhouse to yoke support screws (Fig. 8).

(4) Remove support to frame screws and support.

Installation

(1) Position yoke support on frame and install frame to support screws finger tight.

(2) From under the fenders, install splash shield to support screws finger tight only.

(3) When all screws have been installed, tighten progressively.

(4) Attach horn and light wires to the yoke support with plastic straps.

(5) Install radiator and hoses, fill cooling system and inspect for leaks.

AIR SHIELD AND CROSS BAR

Refer to (Fig. 8) for air shield and cross bar attaching points.

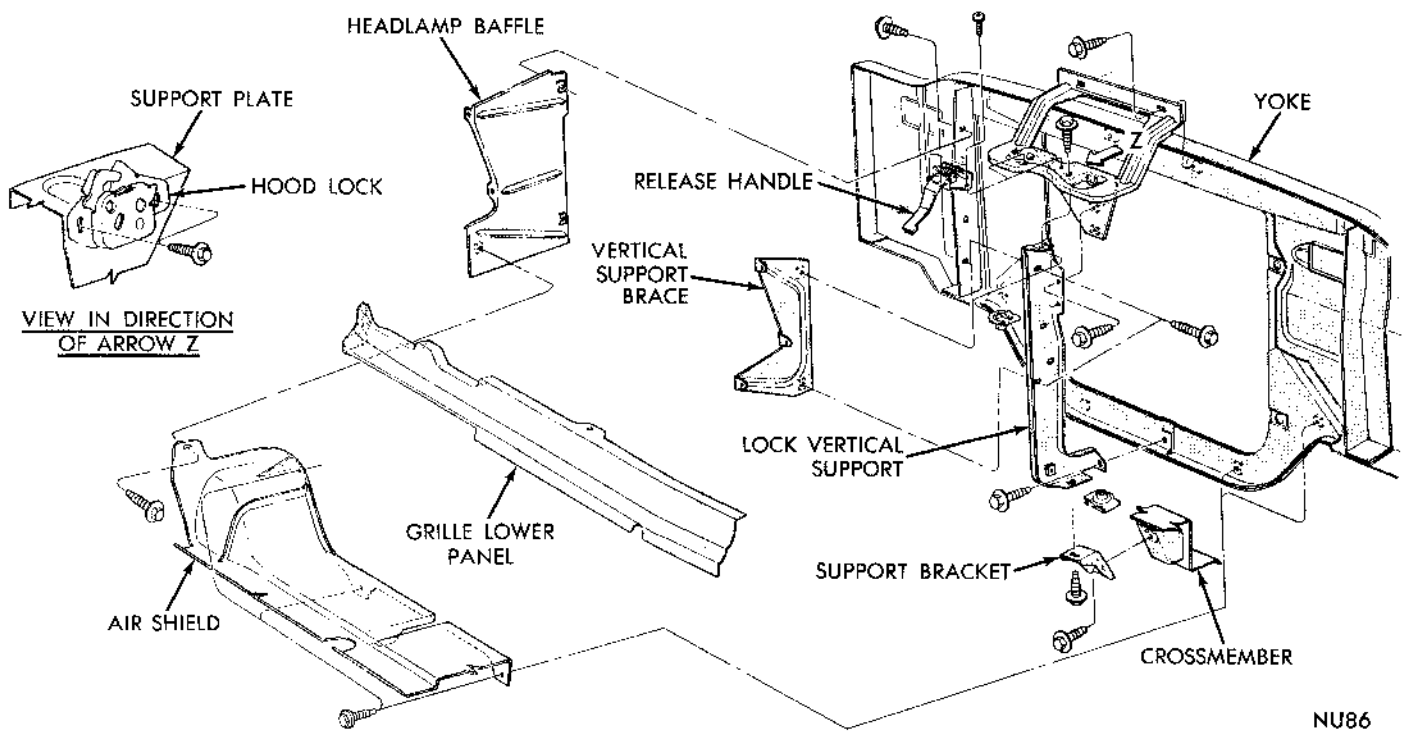

Fig. 8 - Air Shield and Cross Bar

BUMPERS

FRONT AND REAR BUMPERS

Refer to (Fig. 9) for front and rear bumper attaching points.

MyMopar.com

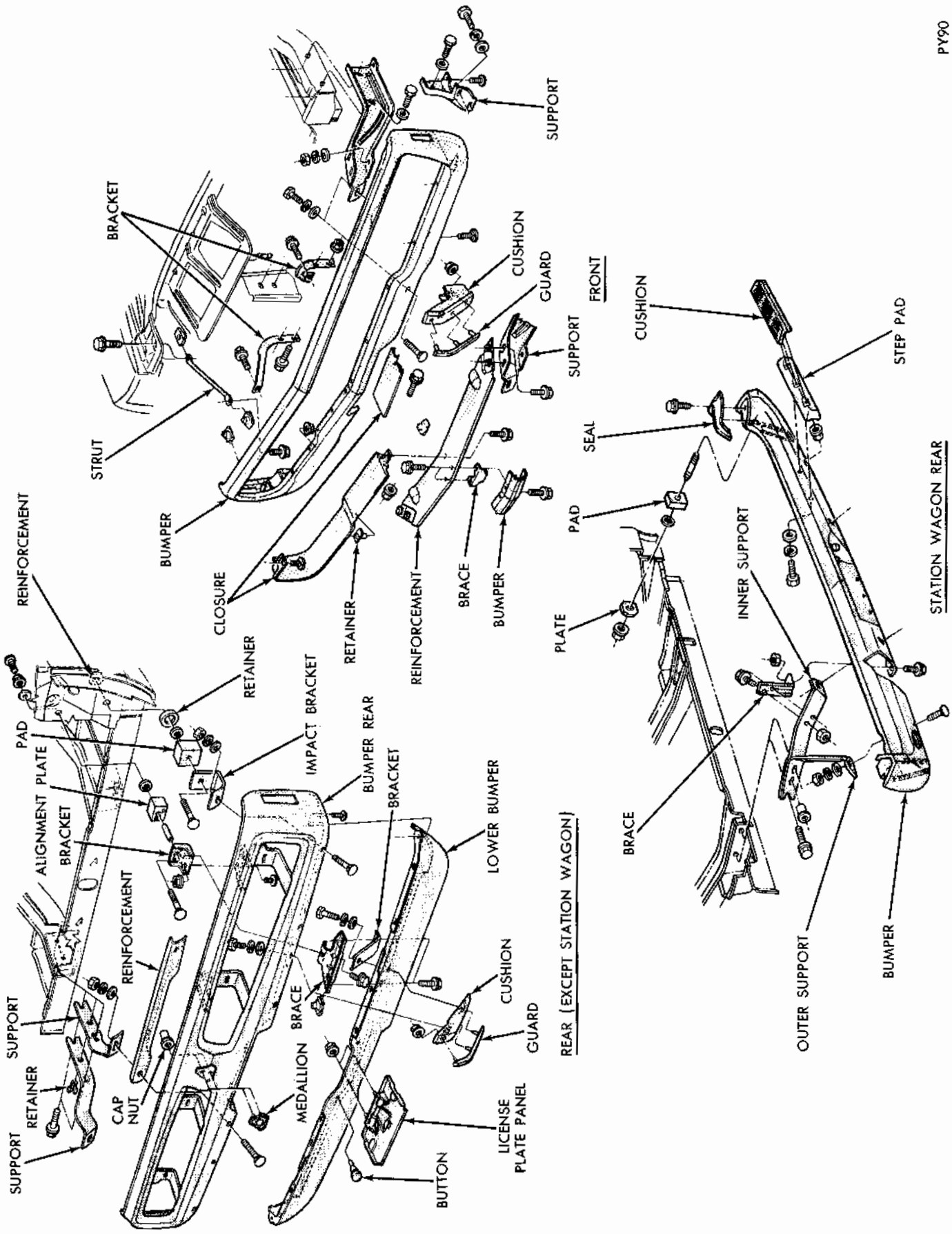

Fig. 9 Front and Rear Bumper Application

MyMopar.com

GRILLE

ALIGNMENT AND REPLACEMENT

Refer to (Fig. 10) for grille attaching points. Align grille to frame opening. The grille must be held against the front face of the fenders at the outer edges to avoid stressing or fracturing. **Caution should be used in protecting textured grilles from high temperature during repairs.**

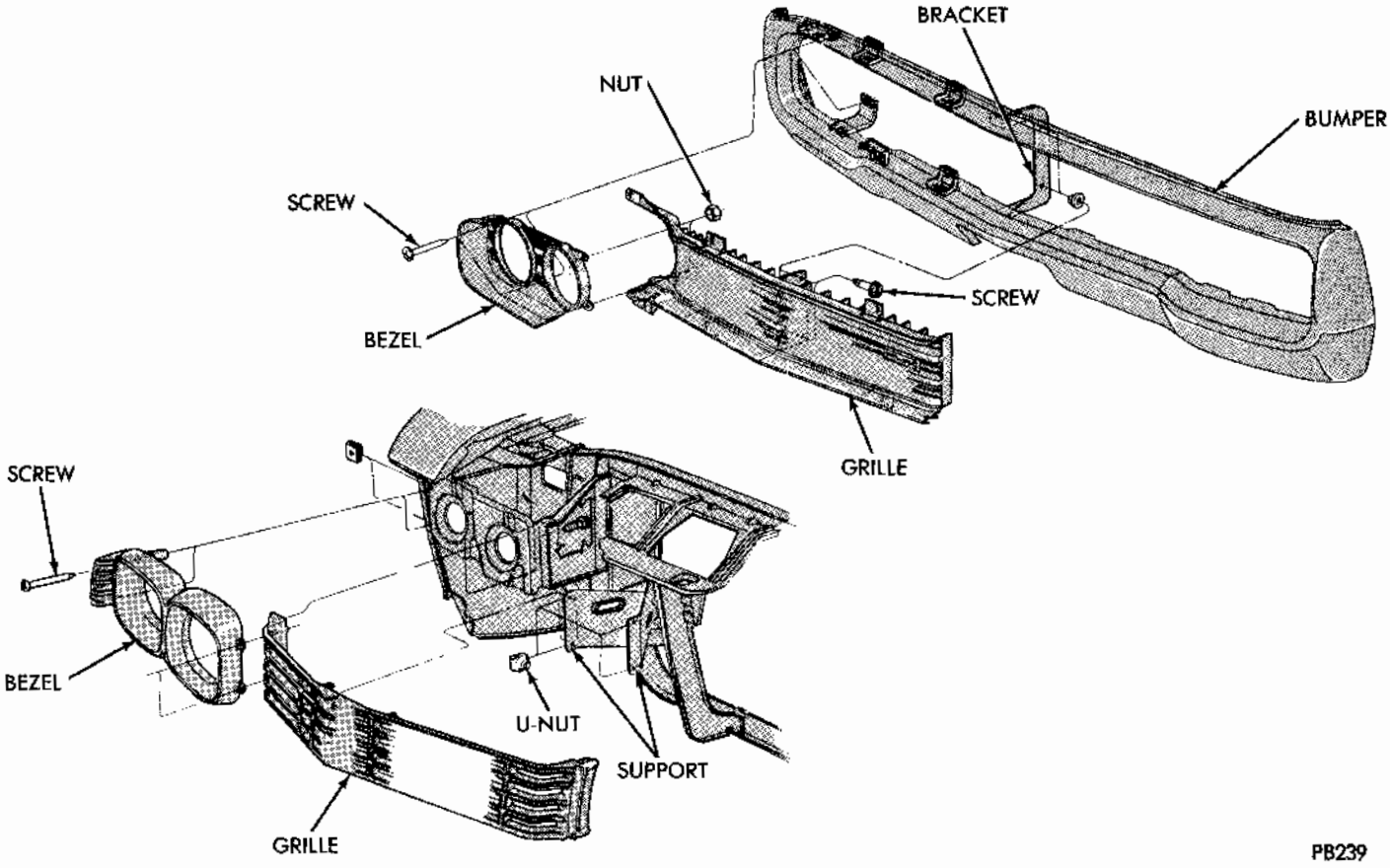

Fig. 10 - Grille Attachment

DOORS

Service procedures for internal door components do not include obvious operations, such as removing door or quarter panel trim panels, testing operation of windows or inspecting glass fit after adjustments or replacements have been performed.

ALIGNMENT

Up and Down

Adjustment of the door can be made at either the pillar or door hinge halfs (Fig. 11).

Fore and Aft

Adjustment is made at the pillar hinge half. **Adjust only one hinge at a time.** Raising outer end of door moves upper part of door forward, when in closed position. Lowering lower part of door moves lower part forward, when in closed position.

In and Out

Adjustment is made at the door hinge half. **Adjust only one hinge at a time.**

HINGE REPLACEMENT

The door hinges (Fig. 11) are attached to the doors by screws accessible from outside. The front door hinges are each attached to the 'A' post by three screws.

The rear door upper hinges (on hardtop and station wagon models) are attached to the 'B' post by three screws accessible from the outside. On sedan models the screws are accessible through an access hole in the 'B' post.

MyMopar.com

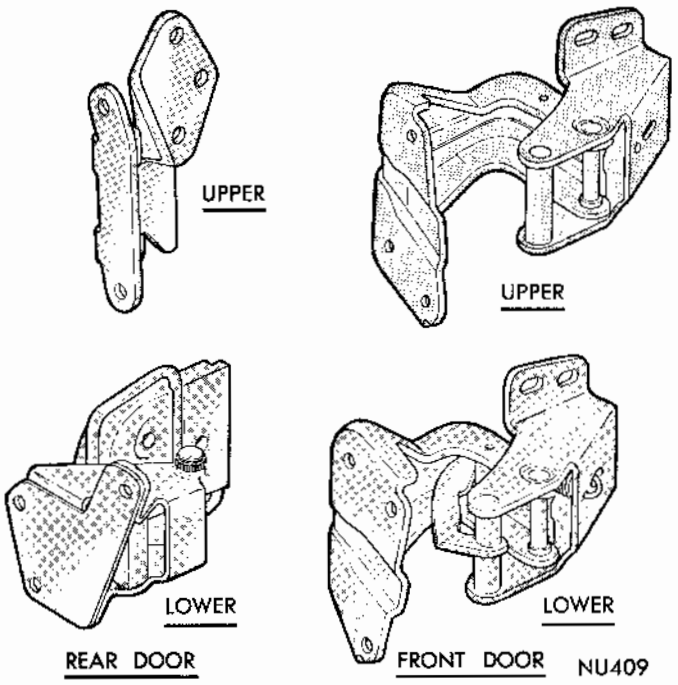

Fig. 11 - Door Hinges

DOOR LATCH AND STRIKER PIN

The silent type door latch (Fig. 12) features a rubber isolation of the round striker pin on the door frame and those surfaces acting as stops inside the latch. The latch assembly is built into a sheet metal pocket on the door face. The striker pin is attached by a single screw which also allows for adjusting. Torque the striker pin screw 40-60 foot-pounds.

DOOR REPLACEMENT

Front Door

Removal

(1) With door wide open, place a jack, with a block of wood on lifting plate of jack, as near hinge as possible.

(2) Remove door interior trim and hardware.

(3) Scribe a line around upper and lower hinge plates on door panel.

On vehicles with electric windows, disconnect the wires from window regulator motor and remove from door assembly.

(4) Remove hinge screws from door and remove door for further disassembly if necessary.

Installation

(1) With door hardware installed, place door, supported by a padded jack, in position in door opening.

(2) Position hinge plates on door panel and install screws finger tight only.

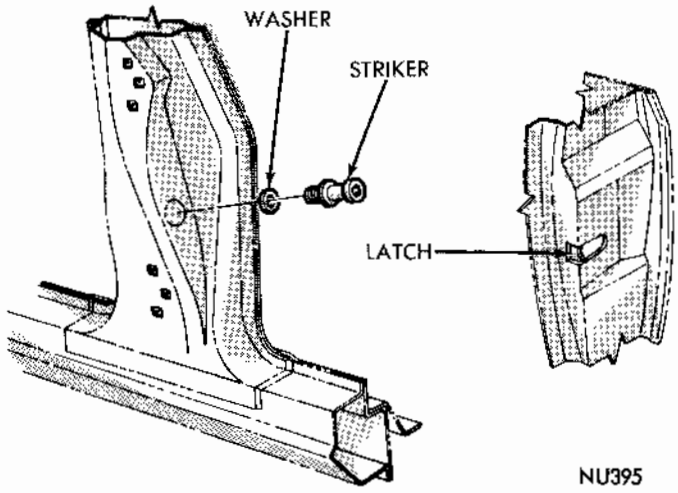

Fig. 12 - Door Latch and Striker Pin

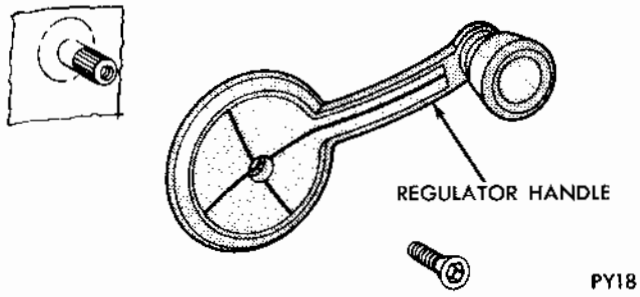

Fig. 13 - Window Regulator Handle

(3) Adjust jack to align hinge plate scribe marks and tighten screws.

Prior to this installation, on electric window lifts, install wiring in doors and attach to motor and control switch.

REAR DOOR

Removal

(1) Open door and place a padded jack under door near the hinges.

(2) Remove door interior trim and hardware.

(3) Scribe aligning marks around hinge plates on door frame.

On vehicles with electric window lifts disconnect wires from motor and switch and remove from door.

(4) Remove the hinge screws from door and remove door.

Installation

On vehicles with electric window lift, attach wiring to motor and switch prior to installation of trim panel.

(1) With inner hardware installed and supported on a padded jack, position door on hinges.

(2) Install attaching bolts finger tight.

(3) Align hinges with scribe marks and tighten

MyMopar.com

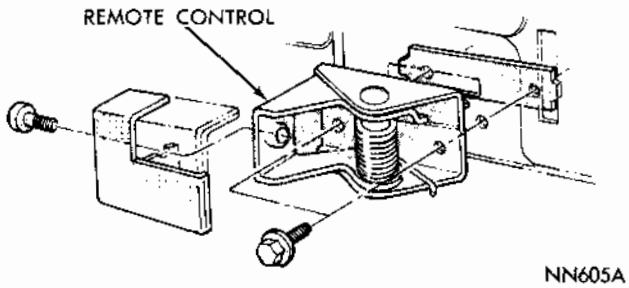

Fig. 14 - Remote Control Handle

screws.

(4) Test door for alignment and install trim and hardware.

INSIDE HANDLES

Window Regulator Handle

The window regulator handles are retained on the shaft with an allen set screw (Fig. 13).

The handles should be placed in approximately a horizontal position with the knobs facing forward on the doors and rearward on the quarter panel.

Remote Control Handle

The remote control handle (Fig. 14) is attached to the control unit with a screw at the rear inner end.

ARM RESTS

The arm rests are retained by two metal screws inserted at the bottom of the arm rest base. The pad and base can be separated and if necessary, the pad may be retrimmed.

TRIM PANEL

Replacement

(1) Remove inside handles and arm rests.

(2) Remove screws attaching trim panel to door inner panel.

(3) Insert a wide blade screw driver next to the retaining clips between trim panel and door frame. Snap retaining clips out of door panel and remove panel.

(4) Before installing trim panel, inspect condition of watershield (Fig. 15).

(5) Align trim panel retaining clips with holes of door frame and bump into place with heel of hand.

(6) Install trim panel to door screws, escutcheon washer, handles and arm rest.

WATERSHIELDS

Refer to Figure 15 for sealing areas and applications of watershields. The lower edge of shield must be inserted into the slots in bottom of inner panels.

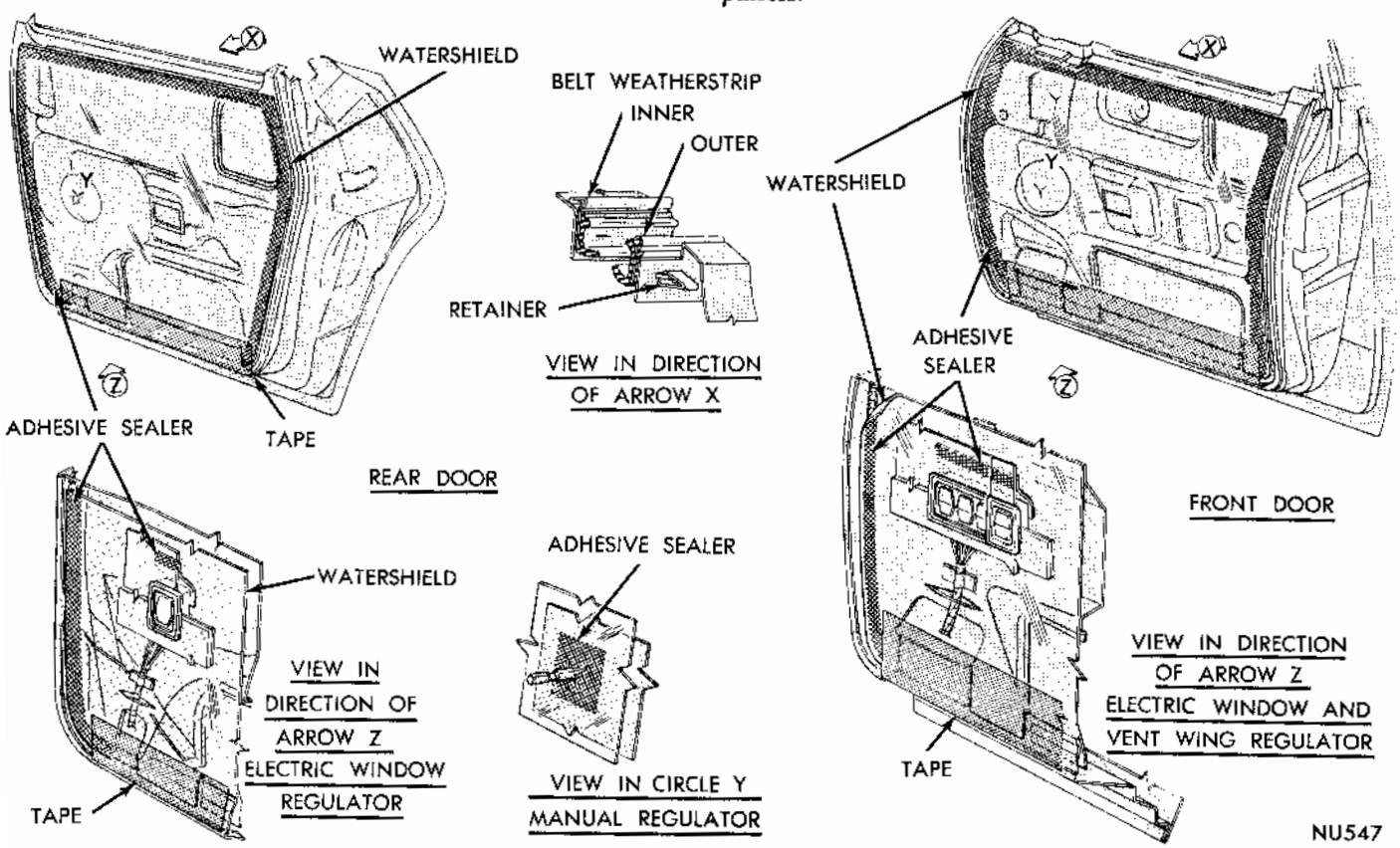

Fig. 15 - Door Watershields

MyMopar.com

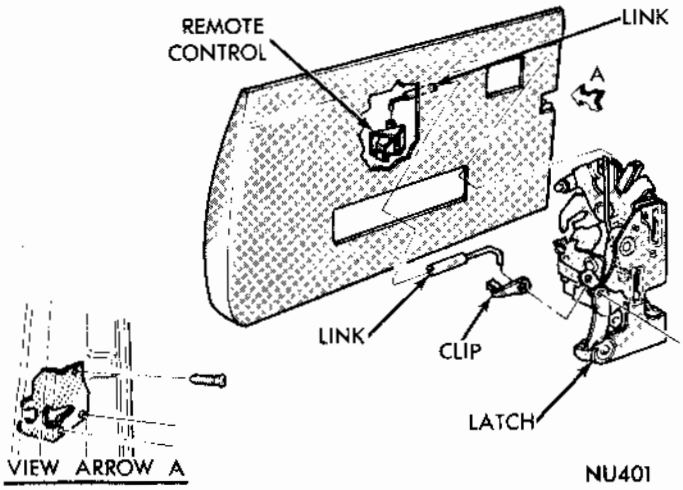

Fig. 16 - Door Lock and Control

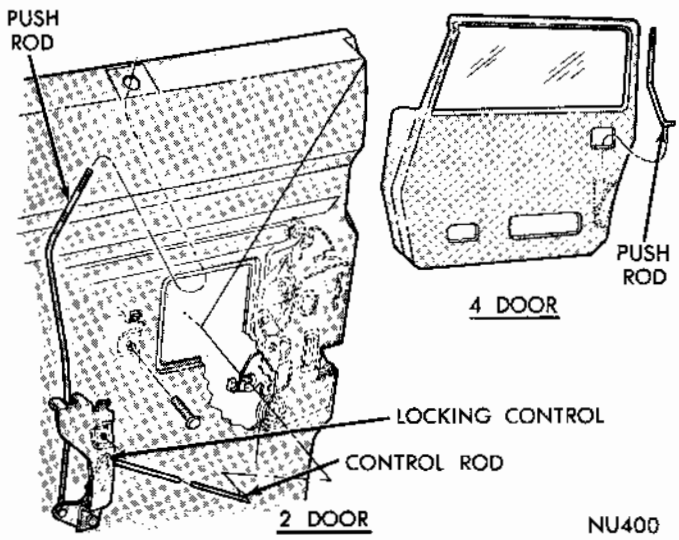

Fig. 18 - Latch Push Rod

LOCK ASSEMBLY (Manual)

Remote Control

Removal

(1) Raise door glass.
(2) Remove remote control base to door panel screws (Fig. 14).
(3) Remove link from remote control lever.
(4) Remove control through large opening in door.

Installation

(1) Apply lubriplate to sliding and contact areas.
(2) Install assembly through door opening and connect link to control lever.
(3) Install attaching screw and test operation of control.

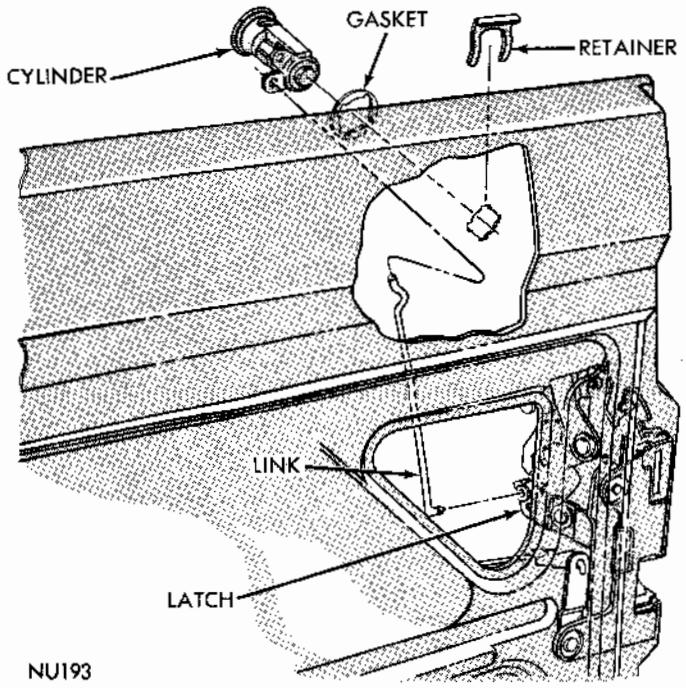

Fig. 17 - Door Lock Cylinder

LATCH REPLACEMENT

Removal

(1) Disconnect handle to latch link (Fig. 16) from latch by pulling link outward.
(2) Disconnect locking lever rod (front door only) from latch.
(3) Disconnect control rod from latch.
(4) Remove latch to door screws.
(5) Rotate latch and disconnect remote control link when removing.
(6) Lubricate all moving points of latch.

Installation

(1) Position lock in door, connect remote control link to lock lever and install retaining screws.
(2) Connect handle to lock link and locking lever rod (front door only) to lock assembly.
(3) Connect locking lever rod and remote control link to lock.

LOCK CYLINDER

Removal

(1) With window in up position, disconnect cylinder link (Fig. 17) from clip on lock lever and from cylinder.
(2) Remove retainer from cylinder body and cylinder from door.

Installation

(1) Position cylinder in door and install retainer.
(2) Connect cylinder link to cylinder arm and to clip on lock lever.

MyMopar.com

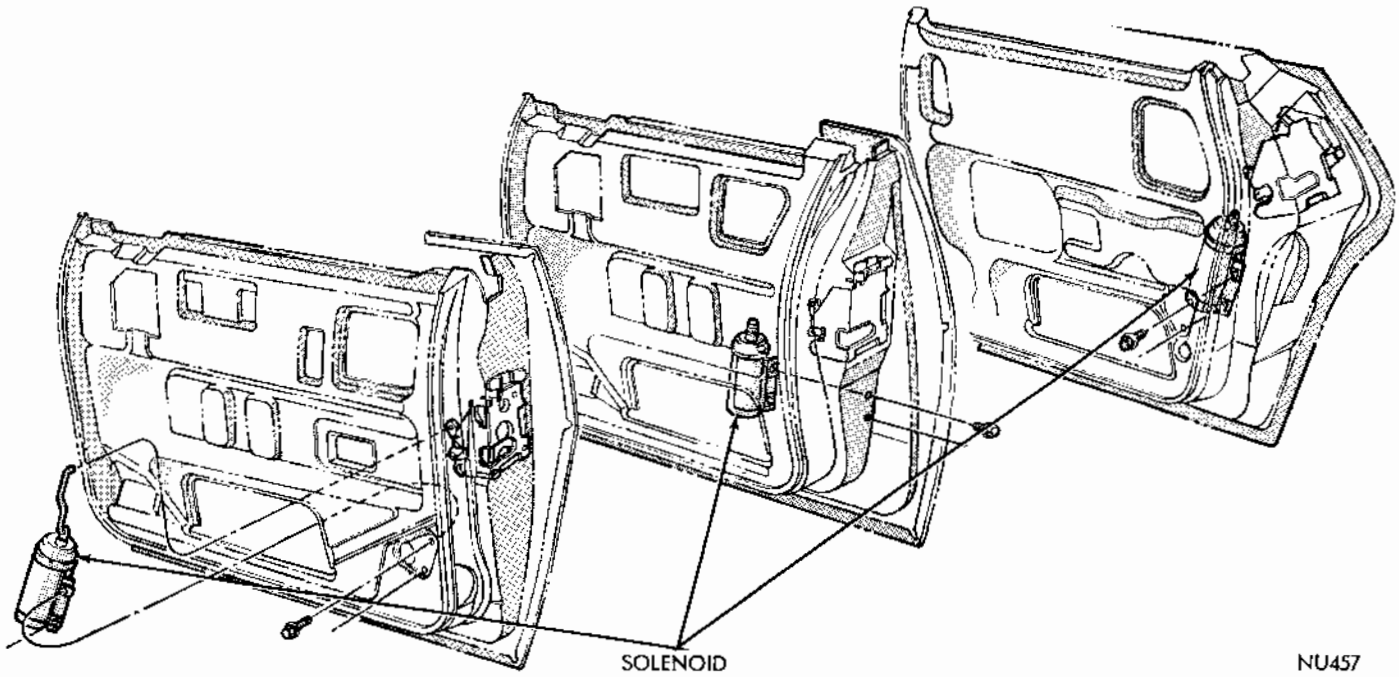

Fig. 19 - Solenoid Attachments

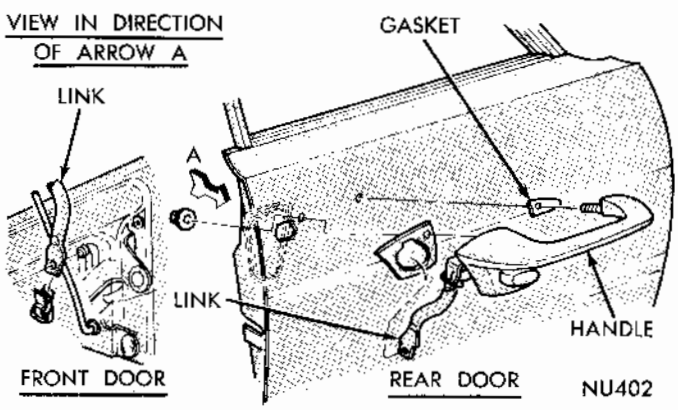

Fig. 20 - Outside Door Handle

Latch Push Rod

The latch push rod (Fig. 18) is positioned through an opening in the door belt area approximately at the front end of the arm rest position on 2 door models. On 4 door models the push rod is located approximately above the latch (Fig. 18).

ELECTRIC DOOR LOCKS

All doors may be locked or unlocked electrically.

Adjustment

(1) Loosen solenoid to mounting bracket screws (Fig. 19).

(2) Push lock lever to down position and slide solenoid to full down position in mounting bracket.

(3) Raise lock lever to up position, extending solenoid rod to maximum up position.

(4) Tighten solenoid to mounting bracket screws and test operation of lock.

REPLACEMENT

Removal

(1) Disconnect solenoid link at solenoid (Fig. 19)

(2) Remove solenoid lead wires.

(3) Remove solenoid to mounting bracket screws and remove solenoid assembly.

Installation

(1) Position solenoid on mounting bracket and install mounting screws. **DO NOT TIGHTEN.**

(2) Connect link to solenoid rod and connect wires.

(3) Adjust lock assembly.

Lock and Switch Replacement

(1) Disconnect lock switch wires (front door only).

(2) Disconnect solenoid link at lock lever.

(3) Remove screws attaching lock and switch assembly to door and remove from door.

(4) Remove switch from lock assembly.

Installation

(1) Position key actuated switch on lock assem-

MyMopar.com

bly and install screw.

(2) Position lock and switch assembly on door inner face and install screws.

Remote Control Switch Replacement

The remote control switch (front doors only) is attached to the door inner face with one screw. The remote control push rod is attached to the switch with a 'push-on' type retainer.

OUTSIDE HANDLE-FRONT DOOR

Removal

(1) With door glass in up position, remove handle attaching nuts from mounting studs (Fig. 20) and link from handle to lock.

(2) Lift handle up and remove from door.

Installation

(1) Position handle into door opening and engage handle to lock link.

(2) Attach retaining nuts and test handle operation.

OUTSIDE HANDLE-REAR DOOR

Removal

(1) With door open and glass in up psoition, remove link retainer at handle connector (Fig. 20).

(2) Depress outside handle release button and remove link from handle connector.

(3) Remove handle to door nuts.

Installation

(1) Position handle in door and install mounting nuts.

(2) Depress handle button and position link over connector on handle.

(3) Install retainer over link and connector.

WEATHERSTRIPS AND WINDCORDS

Door Weatherstrips

Make sure all old weatherstrip particles and cement are removed. **Avoid puckering or stretching of weatherstrip.**

Sedan and Station Wagon Models

(1) Apply lower half of weatherstrip, starting at number one index hole and using fasteners for locating and ending at number 2 index hole.

(2) Apply a 1/8 inch bead of cement to weatherstrip seating area on door upper half.

(3) Install upper half of weatherstrip on door, indexing at the upper corners.

(4) Work weatherstrip from index points to a point midway between them.

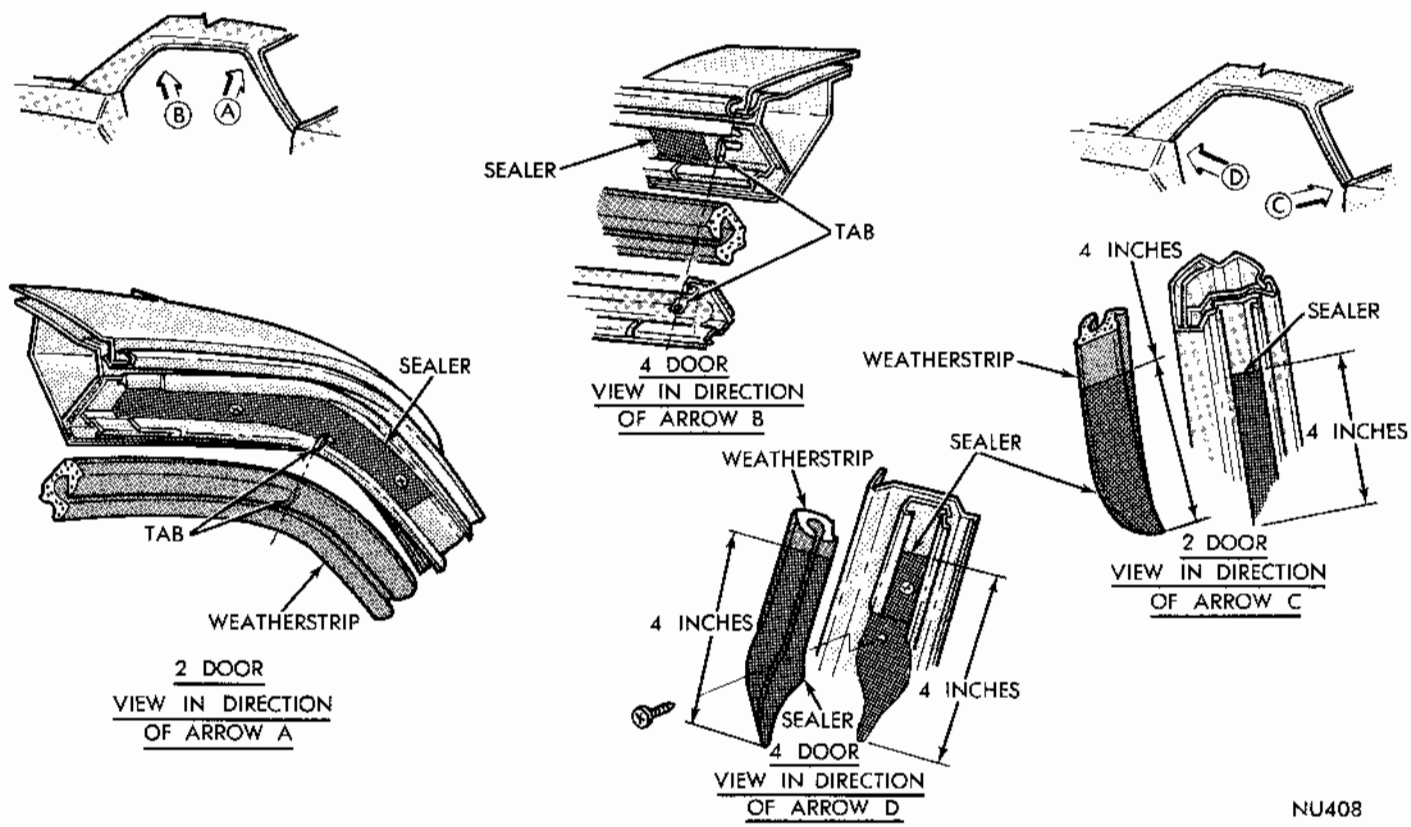

Fig. 21 - Roof Rail Weatherstrip

MyMopar.com

Hardtop Models Front Door

(1) Apply a 1/8 inch bead of cement on weatherstrip.

(2) Position and attach moulded end of weatherstrip with fasteners.

(3) Index and install weatherstrip on door, using fasteners as a locating point and working from hinge pillar side of door completely around to lock pillar.

(4) Make sure lip of weatherstrip dovetails into groove of lock pillar seal and install seal on lock pillar.

Hardtop Rear Door

(1) Index and install weatherstrip on door by inserting fasteners in door and install from top of hinge pillar side of door completely around to lock pillar.

(2) Make sure lip of weatherstrip dovetails into groove of hinge pillar seal and install seal.

(3) Make sure lip of weatherstrip dovetails into groove of door upper ornament seal and install seal.

Roof Rail Weatherstrip

Refer to Figure 21 for attaching points and methods of cementing.

The weatherstrip retainers are adjustable through use of elongated attaching holes. The weatherstrip can be moved in or out for the best possible fit and seal along the top edge of the vent frame, door and quarter glass.

The glass up-stop must be adjusted so a fully raised glass just curls the outer lip of weatherstrip against the inner lip.

When the up-stop, roof rail weatherstrip and glass are properly adjusted, the outer lip of weatherstrip will seal along the top edge of the glass and the inner lip of weatherstrip will seal along the upper inside edge of glass.

Outer Belt Weatherstrip

The door outer belt weatherstrips are retained in the door panel with spring type retainers.

Windcords

Refer to Figure 22 for windcord starting points and method of attachment.

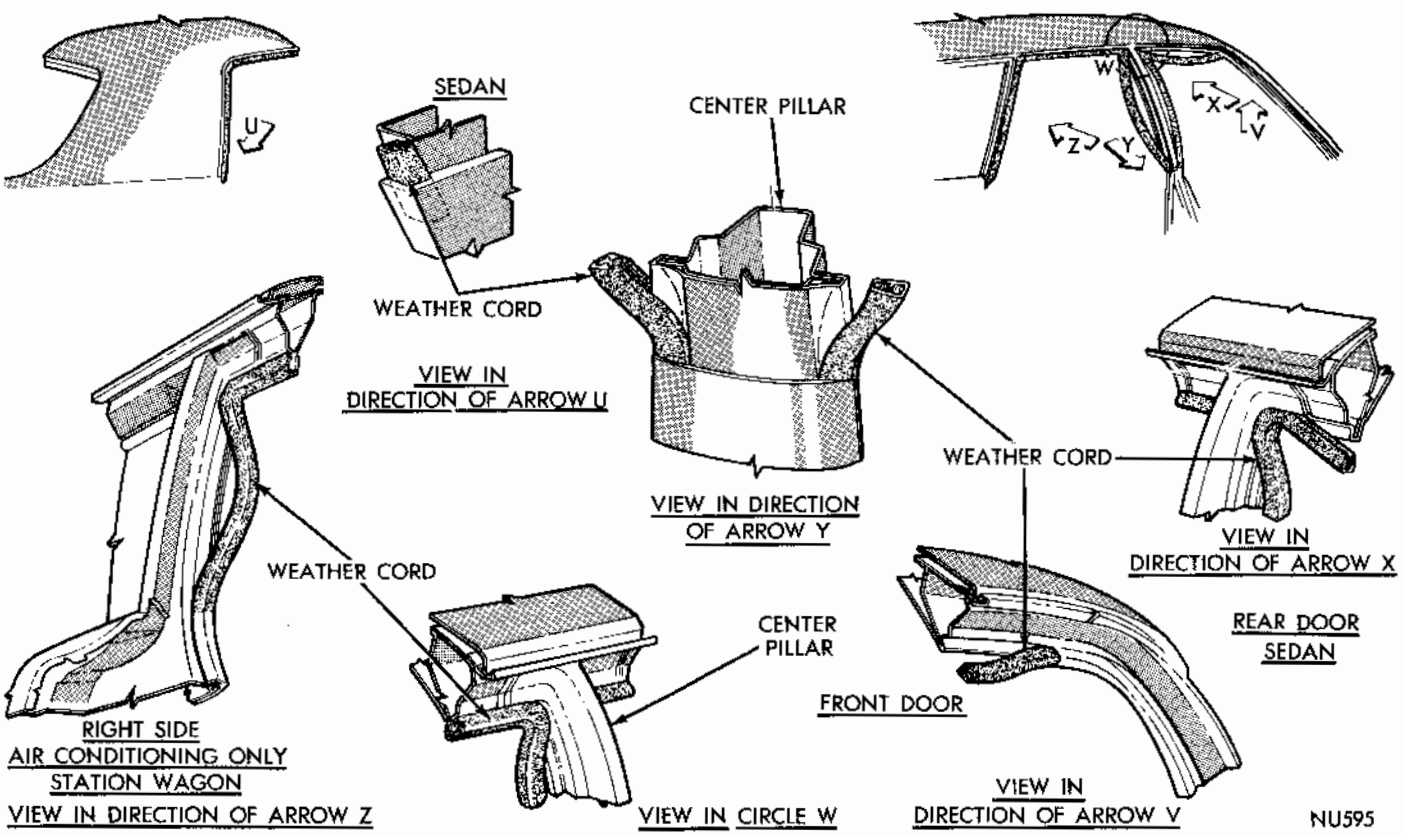

Fig. 22 - Door Windcord's

MyMopar.com

TAIL GATE

Station Wagon Models are equipped with a "two-way" tail gate that can be opened as a swingout type door or in the conventional tail gate manner. The sequence of adjusting the linkage should be followed, as outlined in this service manual, to ascertain correct locking and releasing operations.

ALIGNMENT (Fig. 23)

Lower window before making any adjustments.

Vertical Adjustment

(1) Hinge Pin Adjustment.

a. From underside of body on left side loosen pin lock nut.

b. At top of pin, just under hinge pivot, adjust pin to proper height then tighten lock nut. Proper adjustment is obtained when bushings on body and gate halves of upper hinge are just touching.

(2) Striker Adjustment.

a. Loosen plate screws and striker so plate can be moved up or down.

b Tighten plate and striker at desired position.

Both upper and lower strikers should be adjusted to carry equal weight of tail gate.

In and Out Adjustment

(1) Lower Hinge Support Plate.

a. Loosen three bolts from left underside of body.

b. Adjust tail gate to desired position and tighten bolts.

There isn't any in and out adjustment for upper hinge.

(2) Upper and Lower Striker Adjustment.

a. Follow procedure outline used in vertical adjustment.

Lateral Adjustment

(1) Upper Hinge Body Half

a. Remove bottom trim strip from left rear window.

b. Remove left rear floor trim and cover.

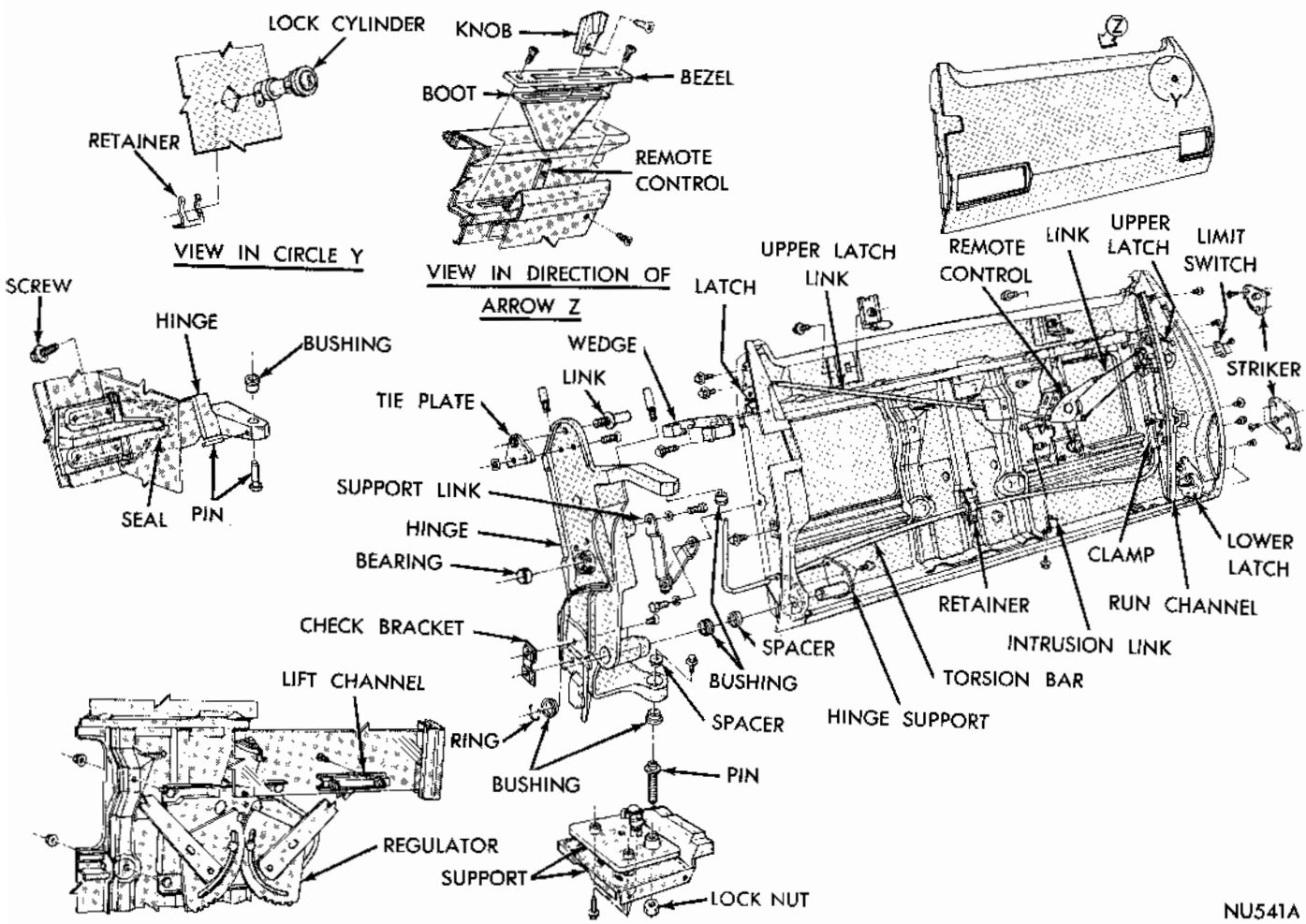

Fig. 23 - Tail Gate Assembly

MyMopar.com

c. Lower left rear quarter trim.

d. Reaching through opening in body pillar loosen four bolts on the upper hinge (body half).

e. Adjust upper hinge to desired positon.

f. Tighten bolts and replace cover, lower quarter trim and window trim.

(2) Lower Hinge Support Plate.

a. Use in and out adjustment procedure.

Door Sag Compensation

Care must be taken in making this adjustment to avoid the outer edges of tail gate rubbing against body.

This can be accomplished by moving upper hinge (body half) laterally closer to body pillar and by moving lower hinge support plate laterally towards the center of body. (See lateral adjustment procedure to accomplish this.)

REPLACEMENT

Removal

Remove trim panel and disconnect terminals at control switch. Disconnect wiper and washer electrical leads.

(1) Remove check arm and torsion bar guide from pillar guide plates.

(2) Support tail gate on jacks or stands.

(3) Loosen hinge pivot pin locking screws (Fig. 23).

(4) Use a pencil and outline hinge plate position on pillar post for future assembly.

(5) Remove hinge plate attaching bolts from pillar post.

(6) Slide hinge plate and torsion bar in through guide toward center of tail gate.

(7) Lower tail gate down and out of body opening.

Installation

(1) With torsion bar and hinge plates pushed in toward center of tail gate, engage hinge plates into lower opening of body.

(2) Attach hinge plate attaching bolts into pillar posts and locate hinge plates in relation to previous marked positions.

(3) Tighten attaching bolts firmly enough to hold position and inspect alignment.

(4) Close tail gate and center in opening.

(5) Attach torsion bar bracket to pillar post.

(6) Open tail gate and tighten locking screws on hinge pivot pin.

(7) Connect electrical leads and install trim panel.

(8) Operate tail gate window and inspect alignment.

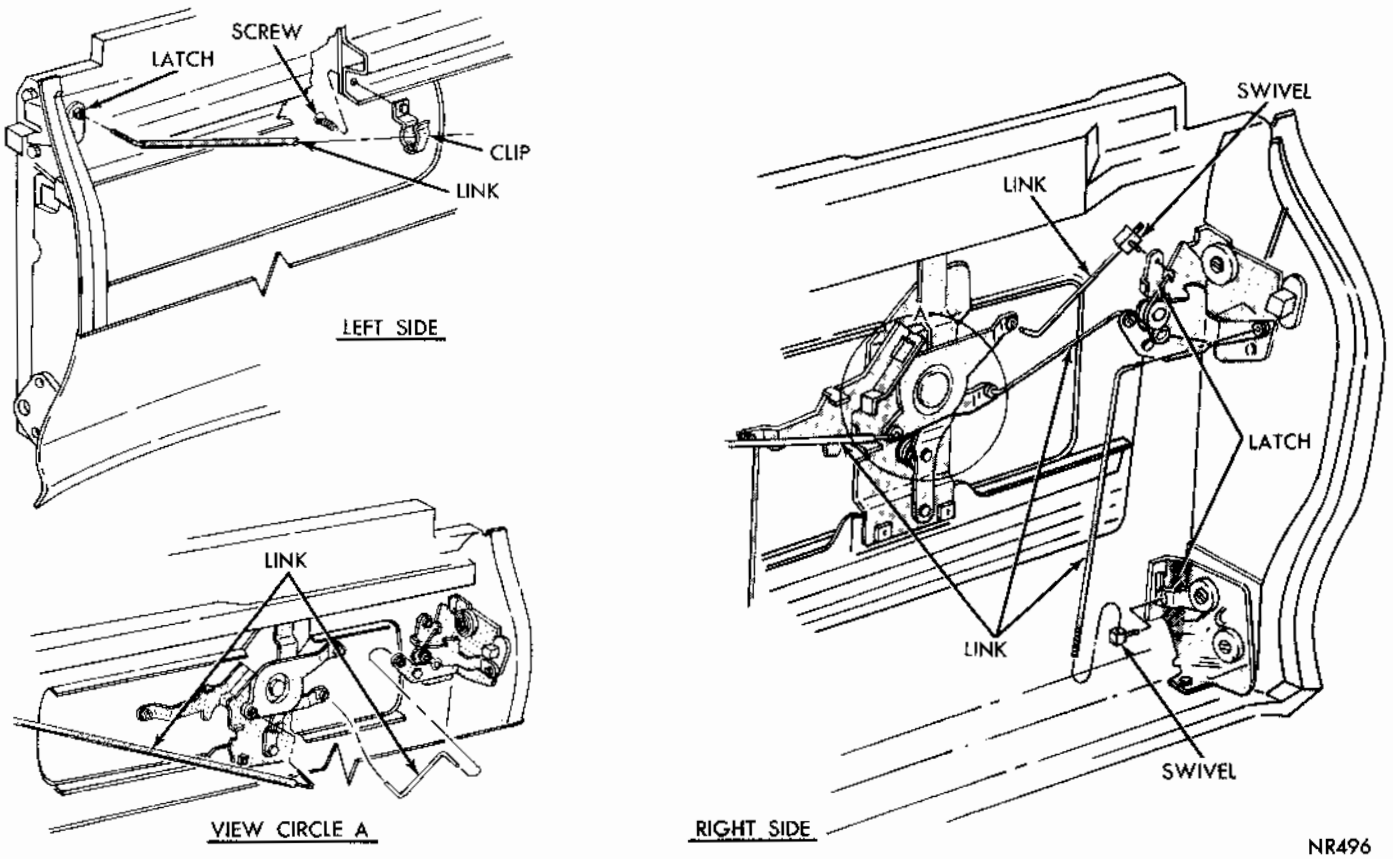

Fig. 24 - Lock Linkage Adjustments

MyMopar.com

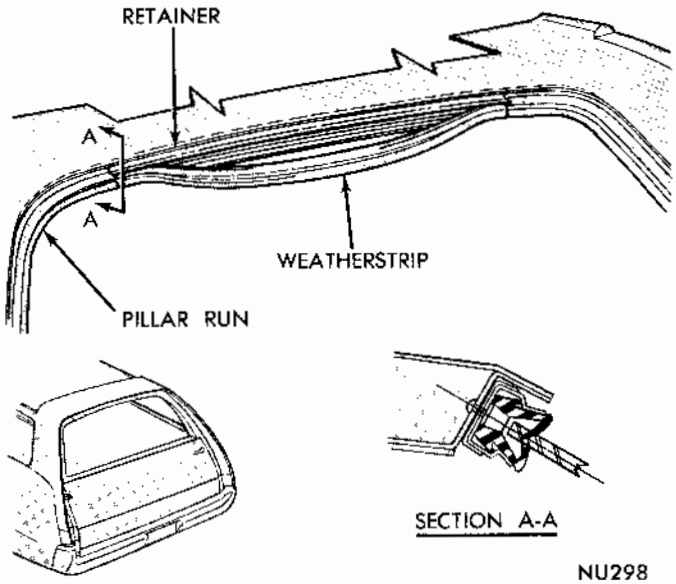

Fig. 25 - Rear Header Weatherstrip

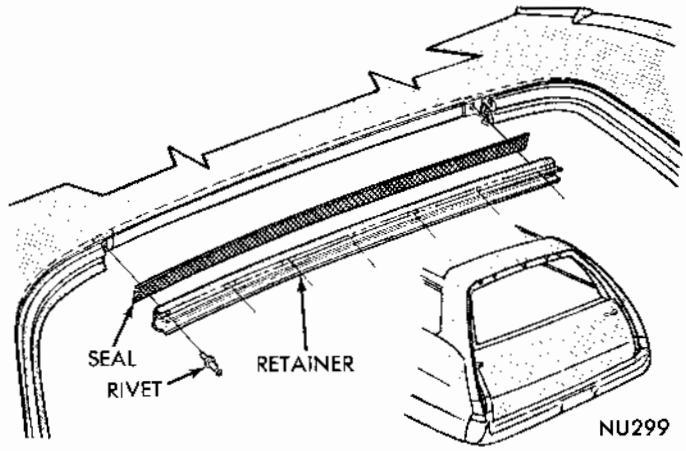

Fig. 26 - Rear Header Weatherstrip Retainer

LOCK

To replace the lock assembly (Fig. 23), remove trim panel glass and glass runs. The lock assembly is retained on tail gate by screws accessible at end of tail gate.

Lock Cylinder

The tail gate lock cylinder assembly is retained on the outer panel with a horseshoe type retainer (Fig. 23).

LOCK LINKAGE

Installation and Adjustment (Fig. 24)

The lower right to upper right latch link and upper right lock to release regulator mechanism arm link can only be adjusted to three total turns from nominal position for **all release** interlocking and latch engaging operations.

Rear Header Weatherstrip

The roof rear header weatherstrip is a press fit in the retainer (Fig. 25). Position the ends first to form a seal with the quarter pillar runs.

Rear Header Weatherstrip Retainer

The roof rear header weatherstrip retainer is at-

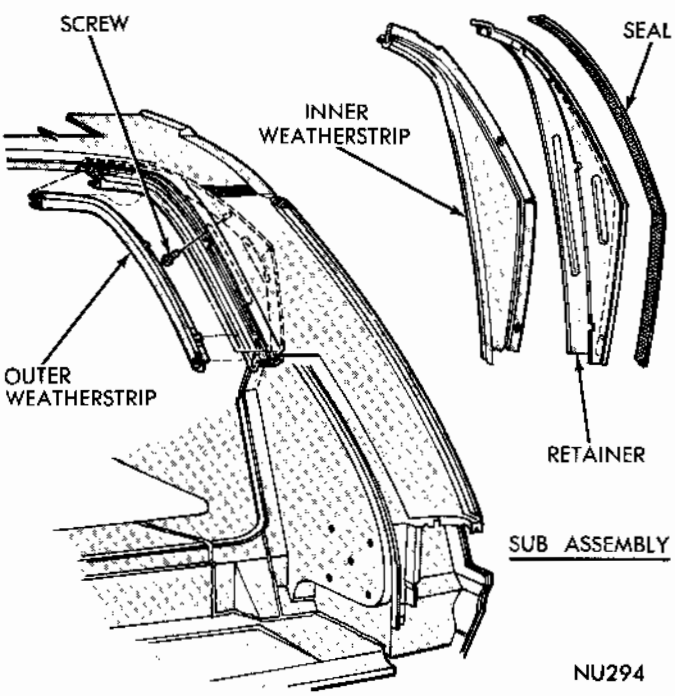

Fig. 27 - Pillar Weatherstrip-Retainer and Seal

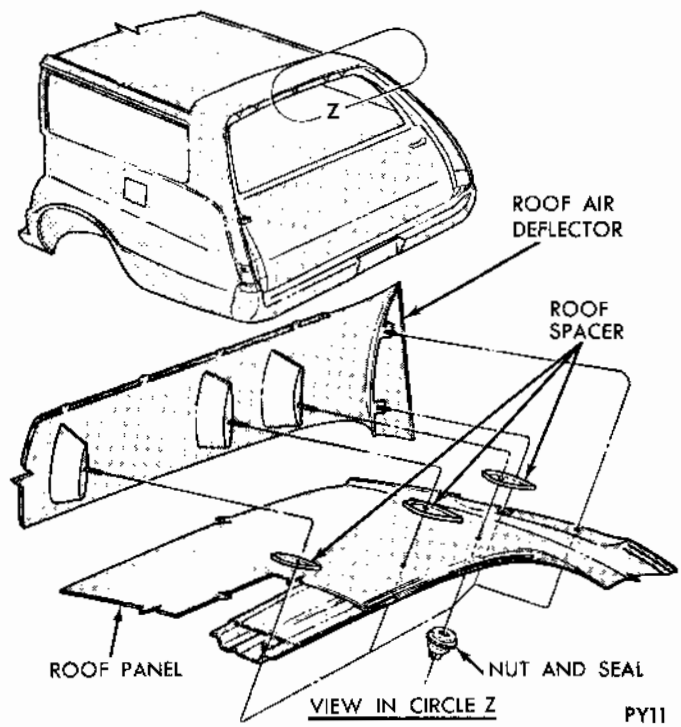

Fig. 28 - Roof Air Deflector

MyMopar.com

tached to the header with "pop" rivets (Fig. 26). The seal has adhesive applied to one side which attaches it to the retainer. Trim the ends of the seal flush with the retainer.

Pillar Weatherstrip—Retainer and Seal

The tail gate upper pillar, retainer, seal with weatherstrip is retainer on the pillar with screws (Fig. 27). The seal has adhesive applied to one side which attaches it to the retainer. The outer weatherstrip and clip assembly is held in position in the retainer by the weatherstrip clips. Index top edge of outer weatherstrip flush with top edge of inner weatherstrip. Secure weatherstrip by pressing weatherstrip clips into notches in retainer.

ROOF REAR AIR DEFLECTOR

The rear air deflector (Fig. 28) used on station wagon models is mounted on the roof by inserting the deflector studs through holes drilled in the panel and securing with sealing type nuts from the car interior. Tighten the nuts 75-115 inch-pounds

DECK LID

ALIGNMENT

The deck lid hinge (Fig. 29) to lid attaching holes are slightly oversize, allowing slight to and fro, and in and out adjustment.

REPLACEMENT

The deck lid is attached to each hinge by two screws. An assistant's aid is recommended when replacing lid to prevent it sliding rearward and damaging paint, also to aid in aligning of hinge screw holes when installing.

LOCK

REPLACEMENT

The deck lid lock (Fig. 30) is attached to the deck lid by two screws. Scribe location of lock mounting flanges to aid in installation. On vacuum actuated units, disconnect vacuum hose.

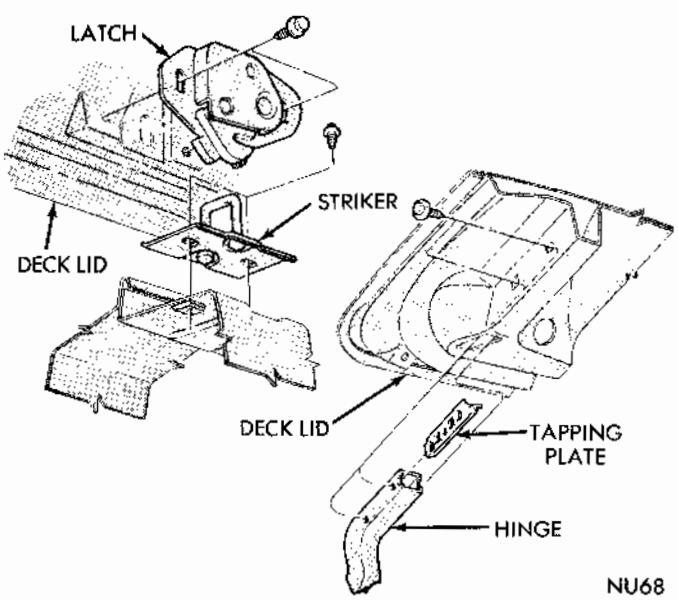

Fig. 29 - Deck Lid Hinge and Latch

Adjustment

Vertical adjustment of lock is made at the attaching screws and side adjustment is made at the striker attaching bolt.

Cylinder Replacement

The lock cylinder is retained by a spring steel "U" shaped clip (Fig. 30)

VACUUM ACTUATED DECK LID LOCKS

The vacuum actuated deck lid lock release system (Fig. 31) consists of a vacuum tank mounted over the right front wheel housing, a push button control switch and a vacuum actuated diaphragm assembly, connected to the lock. Vacuum is supplied to system from intake manifold. Rubber hoses are used to connect component units.

If failure of the system is accompanied with a rough engine idle, remove hose from manifold fitting tube and plug end of the tube. If engine idle improves noticeably, inspect hoses for possible leaks.

Should system fail to operate entirely, remove hose at the release diaphragm in deck lid and connect a vacuum gauge to hose. With engine running, actuate button in glove box while a helper observes gauge. If no reading can be obtained, inspect for a pinched hose. A reading of less than 16 inches will indicate a leak in the system.

HINGE

Removal

(1) Remove deck lid assembly and disengage torsion bar from hinge (Fig. 32) being removed.

(2) Remove hinge to hinge bracket spring nut and remove hinge.

Installation

(1) Position hinge on bracket pin and install a new spring nut.

(2) Install deck lid, connect torsion bar and inspect alignment.

MyMopar.com

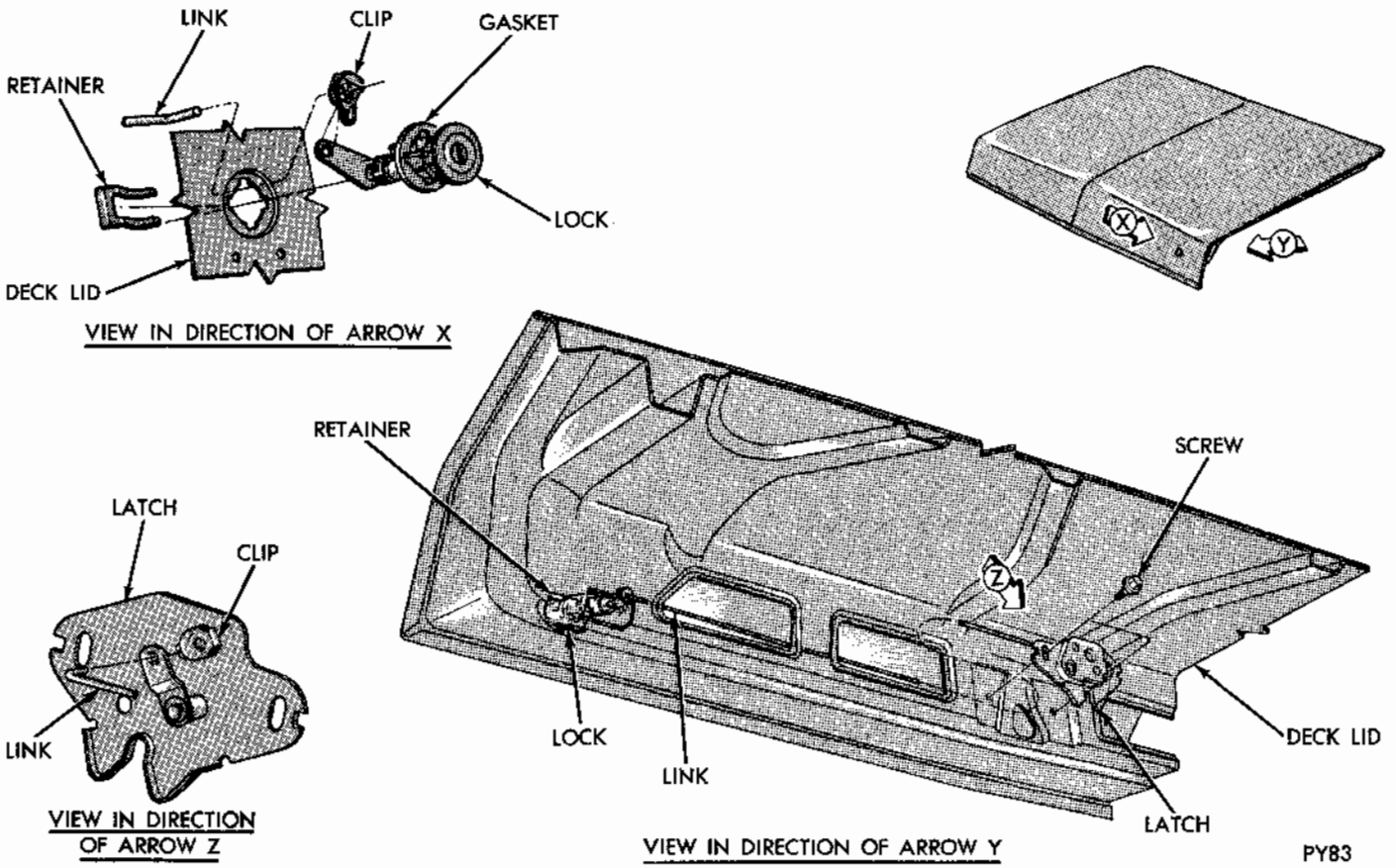

Fig. 30 - Deck Lid Lock and Cylinder

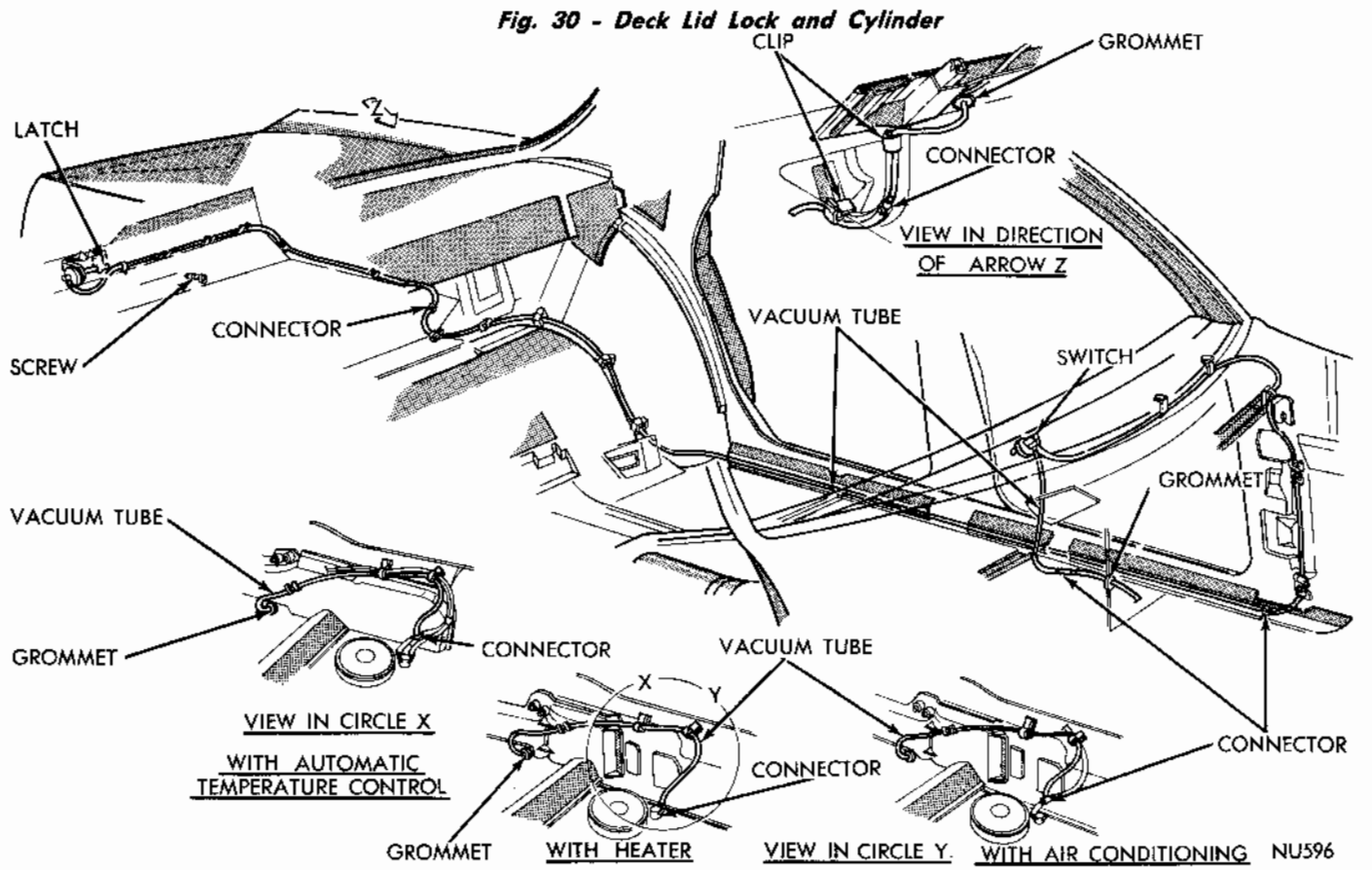

Fig. 31 - Vacuum Actuated Deck Lid Lock

MyMopar.com

TORSION BAR

Removal

Use care when removing torsion bar as it is under a load. Release load from torsion bar slowly and remove from support bracket.

(1) Remove torsion bar (Fig. 32) from adjustment slot.

(2) Push bar out of roller in hinge arm and remove from hinge support.

Installation

(1) Position torsion bar into hinge support and insert end into roller in hinge arm.

(2) Hook torsion bar into support bracket.

(3) Wind bar and insert end into center adjusting slot.

(4) Place lid in various open positions and test tension.

(5) Adjust bars until deck lid stays in open position.

WEATHERSTRIPS

Apply an even continuous coat of cement to entire weatherstrip contact surface of deck lid opening (Fig. 33). Install weatherstrip, make sure weatherstrip molded corners are correctly positioned.

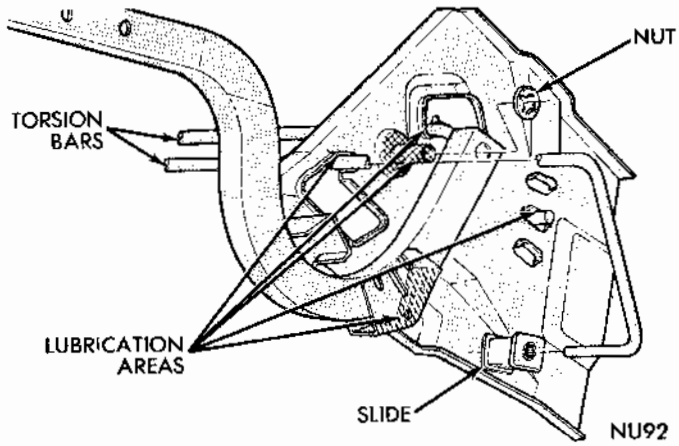

Fig. 32 - Deck Lid Torsion Bar

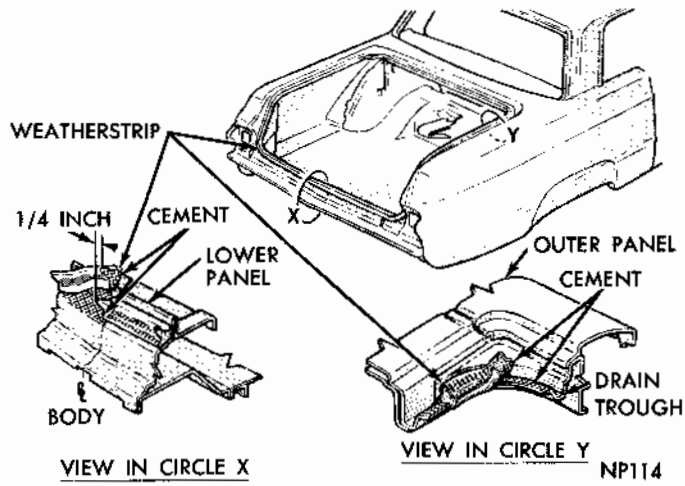

Fig. 33 - Deck Lid Weatherstrip

MyMopar.com

SHEET METAL-DOORS
CORONET-CHARGER

INDEX

	Page
Outside Air Vents	21
With Heater	21
Hood	22
Alignment	22
Replacement	23
Removal	23
Installation	24
Lock	24
Carburetor Outside Air	24
Fender's	24
Alignment	24
Replacement	29
Removal	29
Installation	29
Radiator Yoke Support	29
Replacement	29
Removal	29
Installation	30
Bumper's	30
Grille	30
Doors	30
Alignment	30
Up and Down	30
Fore and Aft	31
Door Latch Striker Adjustment	31
Lock Cylinder	34
Remote Control	33
Outside Handle	34
Door Trim Panel Installation	32
Door Trim Panel Replacement	32
Weatherstrips and Windcords	35
Door Weatherstrips	35
Roof Rail Weatherstrips	35
Tailgate	36
Vertical Adjustment	36
In and Out Adjustment	36
Lateral Adjustment	36
Door Sag	38
Torsion Bar	38
Lock Linkage Adjustments	39
Tailgate Weatherstrips	40
Roof Air Deflector	40
Deck Lid	40
Alignment	40
Replacement	40
Hinge Replacement	41
Removal	41
Installation	41
Torsion Bar Replacement	41
Removal	41
Installation	41
Deck Lid Lock Cylinder	41
Deck Lid Weatherstrip	41

SERVICE PROCEDURES

COWL PANELS

OUTSIDE AIR INLETS

Control Cable

On air conditioned equipped vehicles, only the left vent door is used.

Attachment

The control cables are attached to the instrument panel lower flange with screws (Fig. 1). The lower end of the cables are retained on a mounting bracket with a clip and screw (Fig. 2). The right cable "looped" end is positioned on the air door control crank arm (Fig. 2).

The left cable is held on the crank arm with a spring type retainer (Fig. 3).

Routing—with Heater

Route cables rearward of heater support brace, under heater control cables and defroster hoses to the instrument panel attaching points on right side of steering column (Fig. 3).

With Air Conditioning (Left door only)

Route cables behind steering column support bracket, through spot cooler duct hole in brake pedal bracket, under speedometer cable and around air conditioning outlet duct to instrument panel attachment holes on right side of steering column (Fig. 4).

Attachment

(1) At lower end of cable, remove screw and clip retaining cable on mounting bracket (Fig. 2).

(2) Push control knob in fully and rotate air door control crank arm to the fully closed position.

(3) Position clip over cable and on mounting bracket. Install screw, tighten securely and test cable operation.

OUTSIDE AIR DUCTS (Fig. 5)

Vehicles equipped with a heater include the right side duct in the heater housing. Vehicles without

MyMopar.com

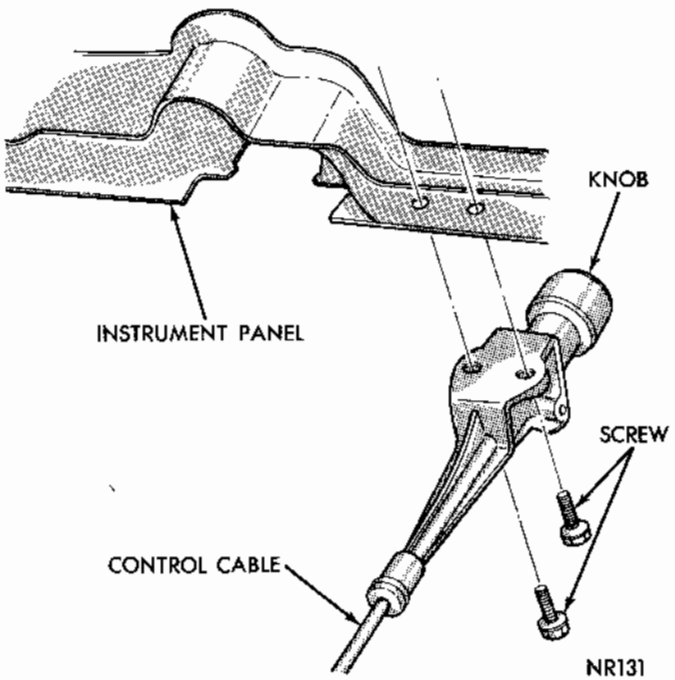

Fig. 1 - Control Cable Attachment

a heater have a separate duct assembly for the right side. The left side duct assembly is the same for all models.

Without Heater

The outside air duct assemblies are attached to the plenum opening. The right duct is retained by two hook type rods positioned over the plenum opening flange and held to brackets on the base of the duct with screws (Fig. 5).

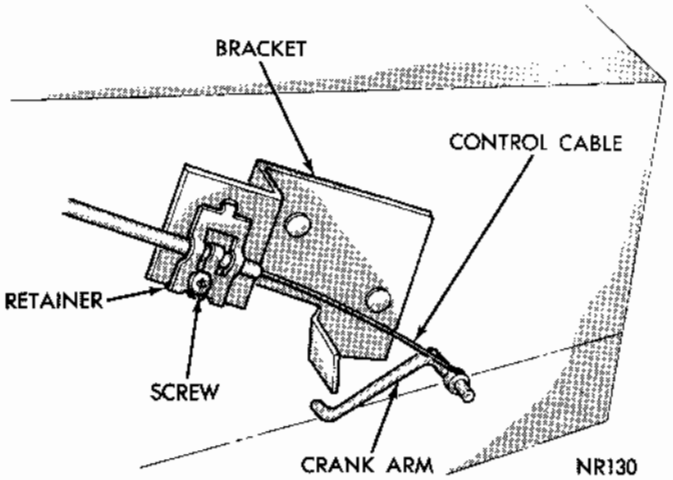

Fig. 2 - Control Cable Adjustment

The left duct assembly is attached directly to the plenum by positioning the duct over the plenum weld studs and securing with nuts.

With Heater

The right duct, part of the heater housing, is attached to the plenum with a single hook type rod positioned over the plenum flange and secured to the duct base with a screw (Fig. 5).

HOOD

ALIGNMENT

Prior to making any hood adjustment, inspect clearances and alignment of hood sides in relation to cowl, fenders and grille. The cowl adjustment must be made first.

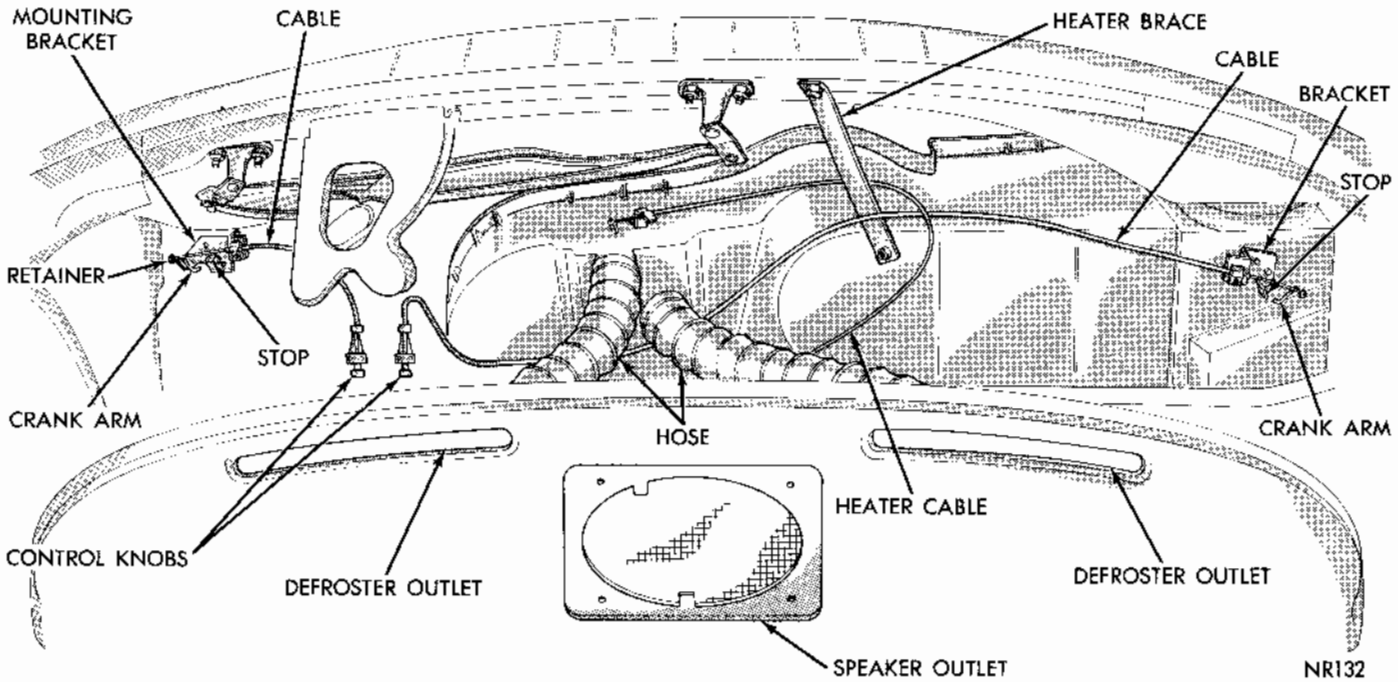

Fig. 3 - Control Cable Routing with Heater

MyMopar.com

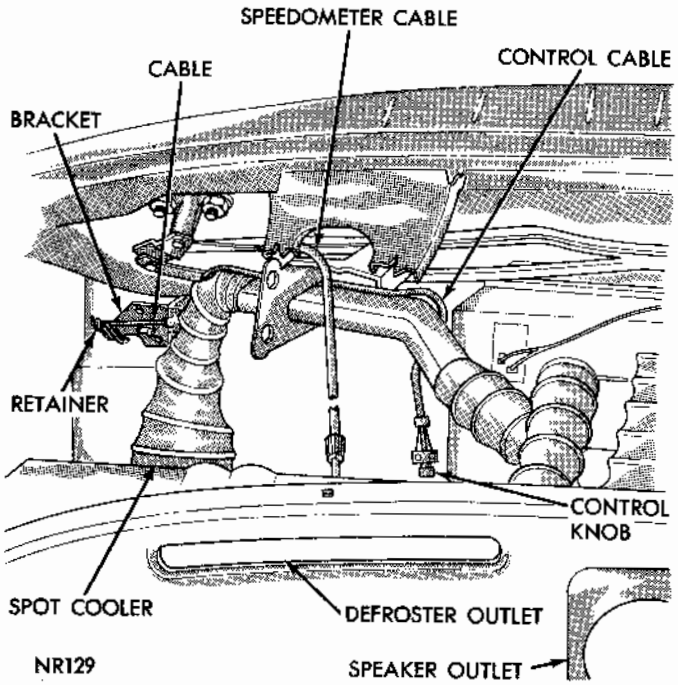

Fig. 4 - Control Cable Routing with Air Conditioning

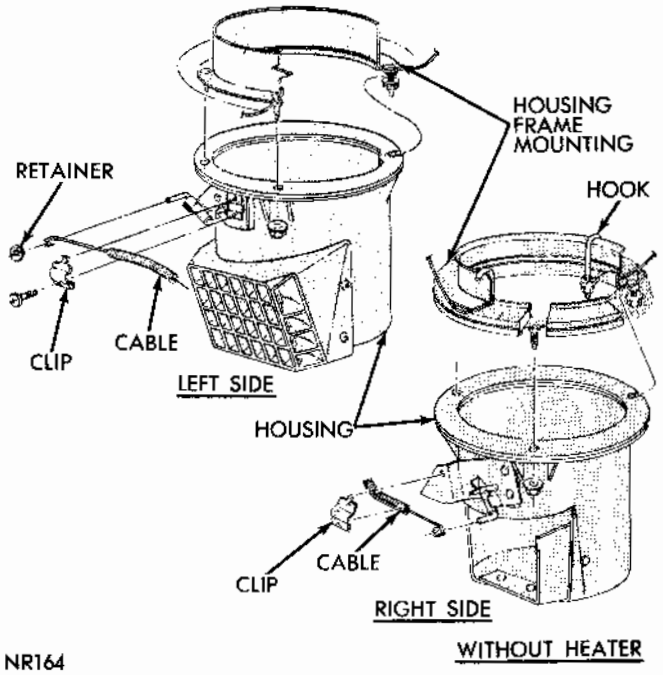

Fig. 5 - Outside Air Duct

REPLACEMENT

Removal

(1) Place a protective covering over cowl and fender area.

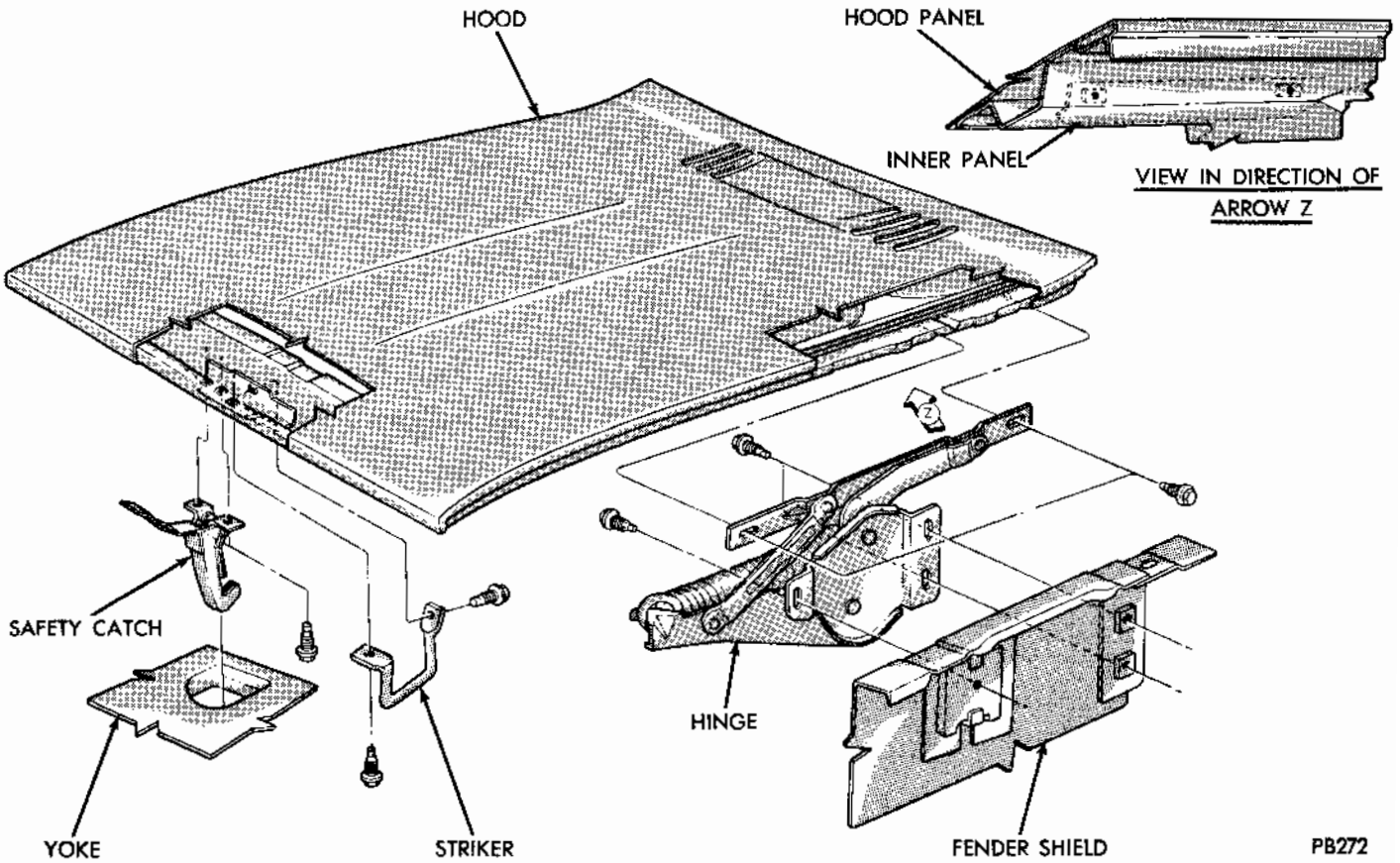

Fig. 6 - Hood Adjustment

MyMopar.com

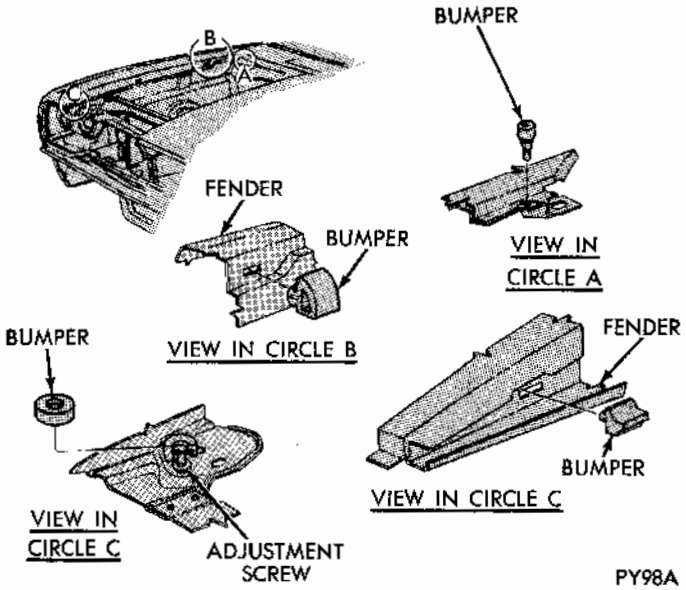

Fig. 7 - Hood Leveling Adjustment

(2) Mark outline of hinges on hood to aid in installation (Fig. 6).

(3) With an assistant, remove hinge-to-hood attaching bolts and remove hood assembly. Use extreme care not to permit hood to slide rearward and damage painted surfaces of the cowl and fender areas.

Installation

(1) With an assistant, position hood on hinges and install hinge to hood bolts. Do not tighten.

(2) Align scribe markings on hood with hinge and tighten screws lightly.

(3) Close hood and inspect hood alignment.

(4) Adjust the alignment (Figs. 6 and 7) as necessary and tighten the hood to hinge bolts 180 inch-pounds.

(5) Remove protective covering from cowl and fender area.

LOCK

To adjust the lock (Fig. 8) loosen the attaching screws and raise or lower until the correct adjustment has been obtained. After making any adjustment that requires a shifting of the hood, always inspect the hood striker and the lock plate assembly for alignment.

TORSION BAR REPLACEMENT

(1) Disengage the torsion bar roller from its seat on hood hinge by forcing the roller end of bar to the rear and raising hood fully.

(2) Disengage left hand torsion bar roller from hood hinge.

(3) Remove hood assembly.

(4) Remove torsion bars from center support and remove bars from end reinforcements.

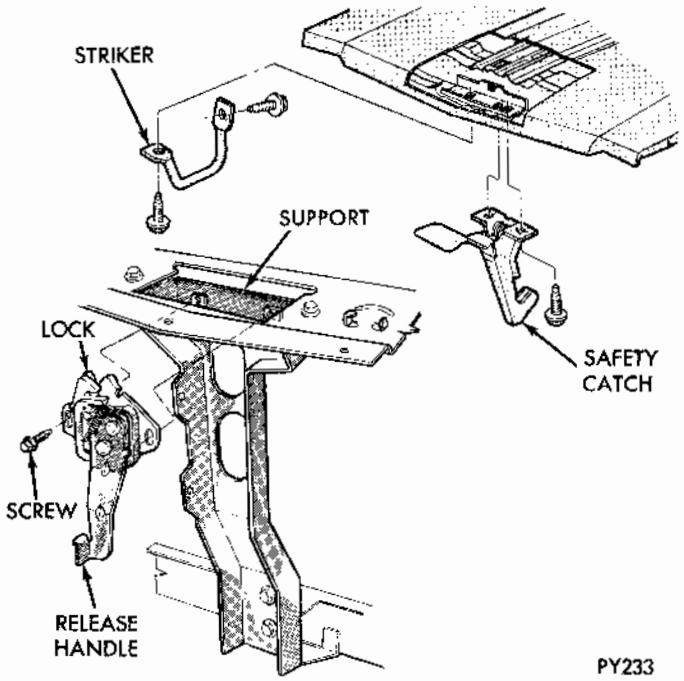

Fig. 8 - Hood Lock and Striker

(5) Lubricate torsion bar rollers and install on hinges.

(6) Install hood assembly and adjust alignment.

HINGE REPLACEMENT

The hood hinge (Fig. 6) is attached to the hood by two screws and to the fender splash shield by three screws. Prior to removing the hinge mounting screws, prop the hood into the wide open position. The prop should be positioned so the hood cannot move rearward.

CARBURETOR AIR SYSTEM

The carburetor air system (Fig. 9) is available on Super Bee, and Charger R/T is the "Air Grabber" - - a vacuum-operated air scoop in the hood ducted directly to the air cleaner. This system is standard with the "hemi" engine and optional on the high-performance 383 and 440 CID engines. The driver can open or close the air scoop when the engine is running. It closes automatically when the engine is shut off.

FENDERS

ALIGNMENT

The fender should be adjusted to provide for equal spacing at the cowl, door front edge and door panel top edge. Alignment should be made at bottom of floor sill panel, front of hood and door outer panel upper edge.

MyMopar.com

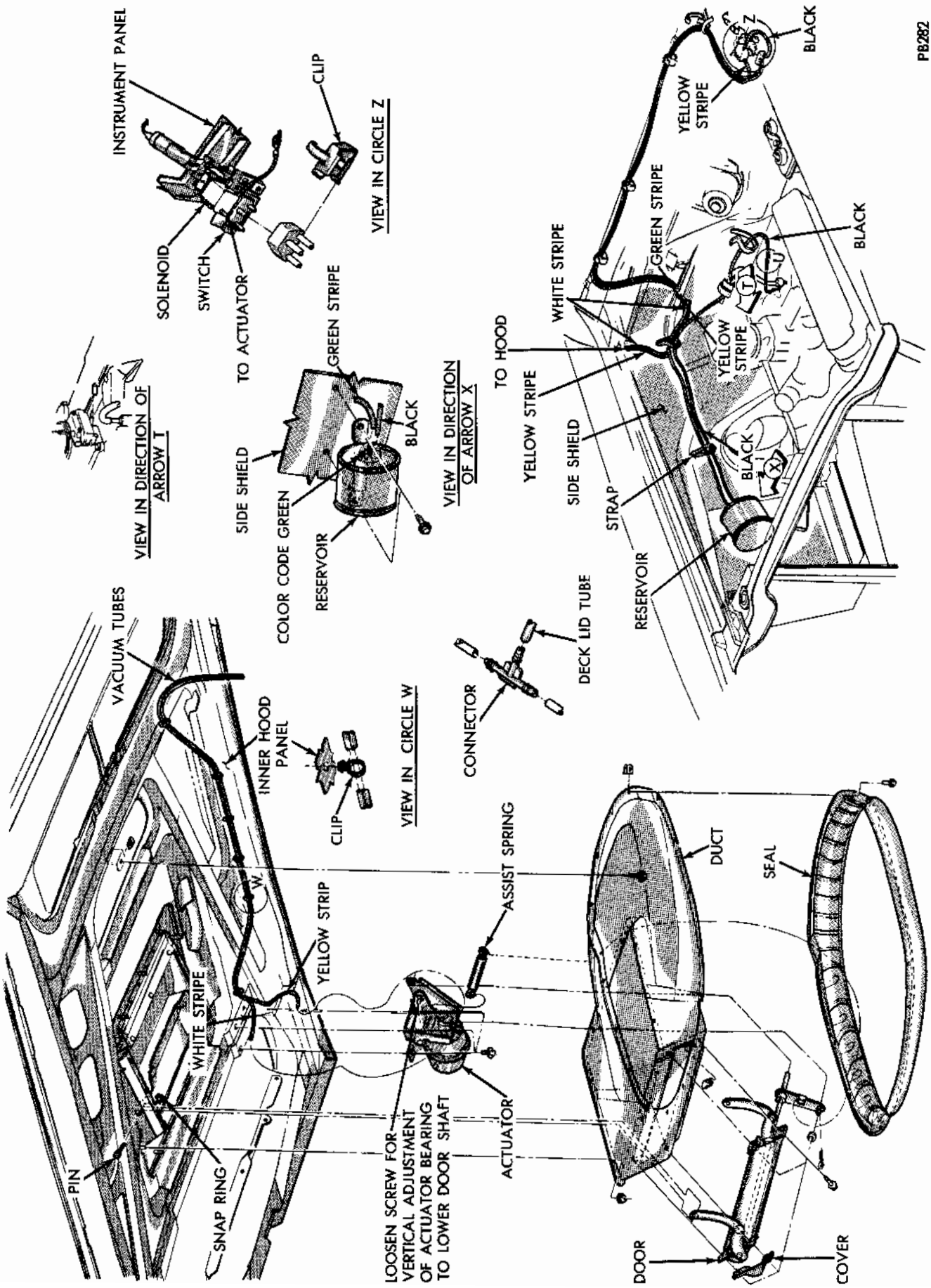

Fig. 9 - Carburetor Air System

MyMopar.com

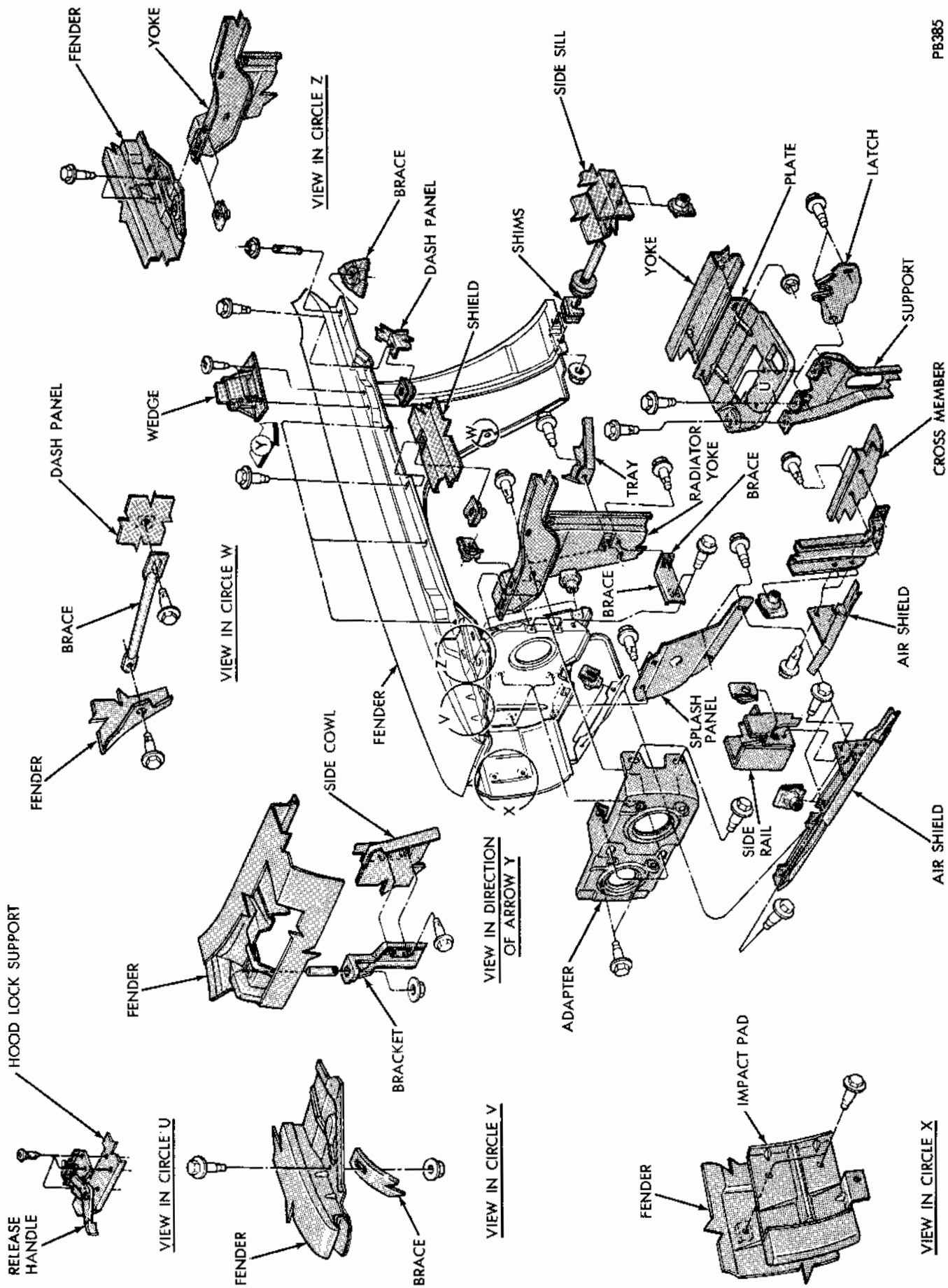

Fig. 10 - Sedan Fender Attachment

MyMopar.com

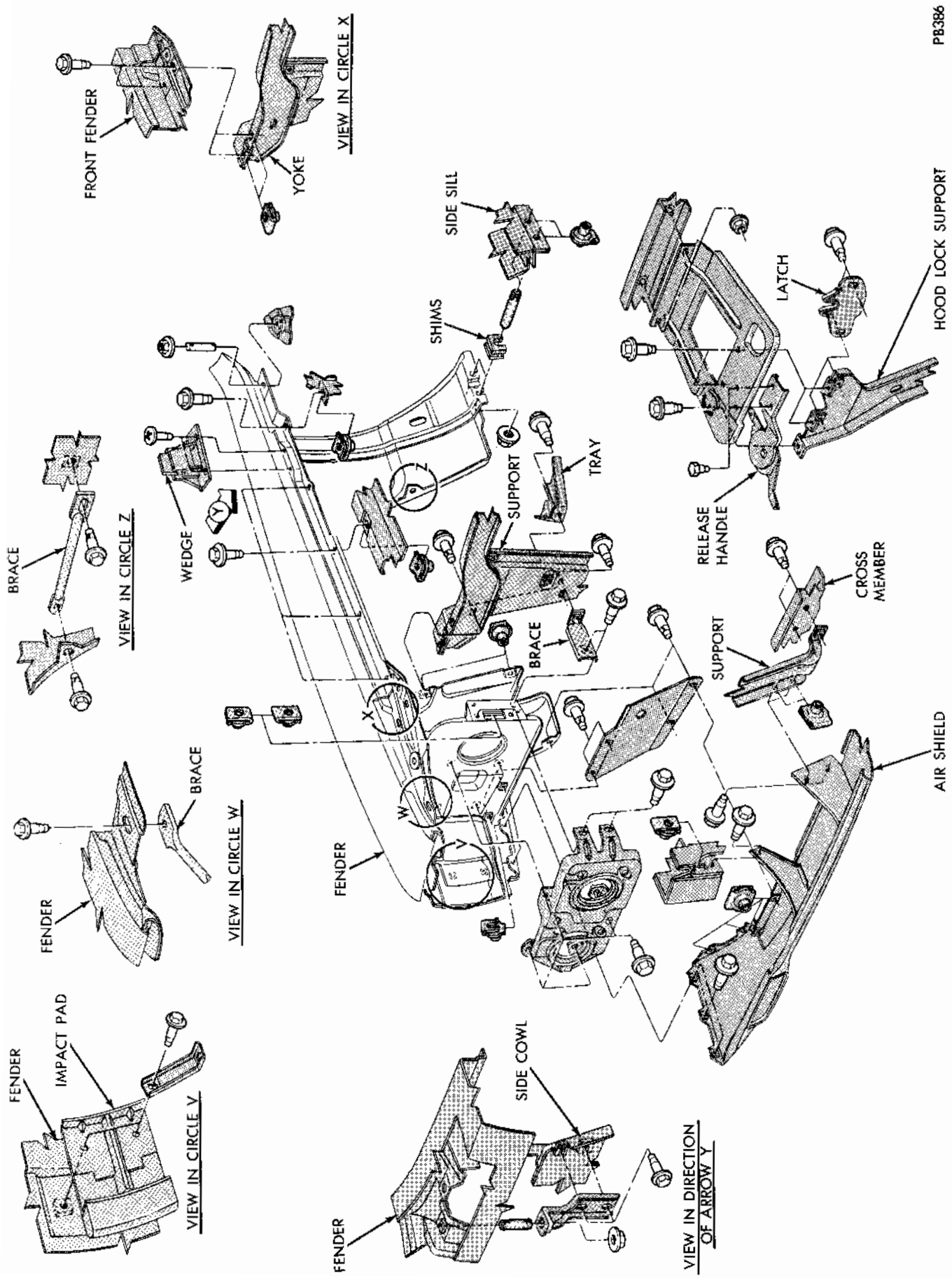

Fig. 11 - Hardtop Fender Attachment

MyMopar.com

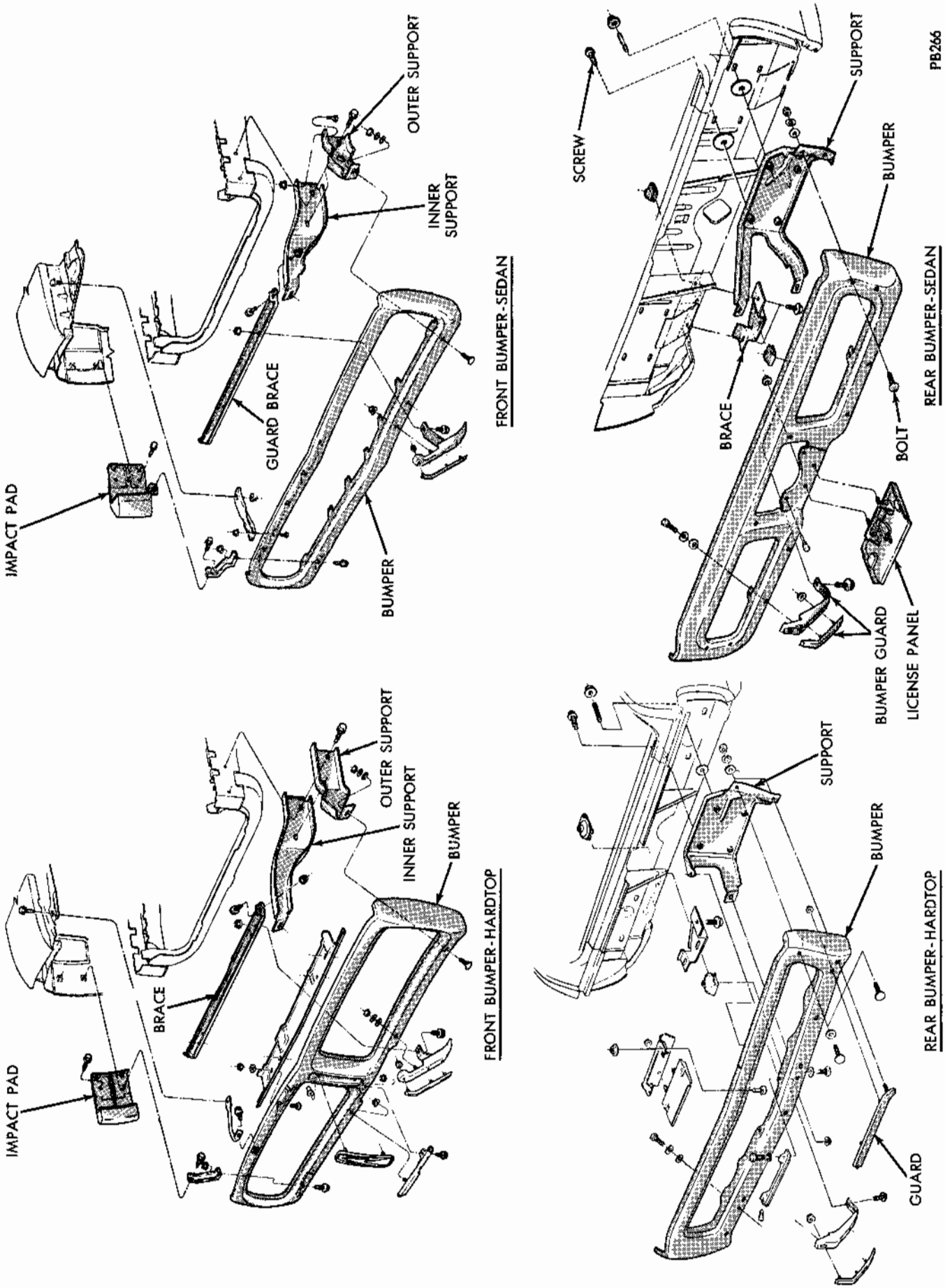

Fig. 12 - Bumper Attachment (Except Station Wagon)

MyMopar.com

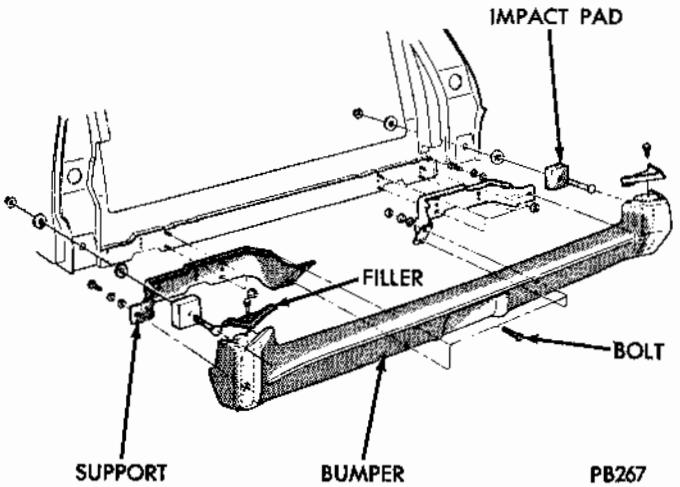

Fig. 13 - Rear Bumper Station Wagon Models

REPLACEMENT

Removal

(1) Disconnect battery ground strap.

(2) Tape leading edge of front door and cowl to fender area to avoid damaging paint.

(3) Remove front bumper assembly.

(4) Disconnect head lamp wires and remove nuts attaching grille extension to fender.

(5) Remove nuts and screws attaching fender to cowl, floor sill, wheelhouse or splash shields and radiator yoke (Figs. 10 and 11).

(6) Remove fender assembly and if necessary remove fender mouldings, ornamentation and head light assemblies.

Installation

(1) Install head lamps, mouldings and ornamentation if removed.

(2) Carefully position fender on studs at cowl side area and align fender with mounting holes in radiator yoke. Install all mounting screws and retainer nuts.

(3) With fender correctly positioned, tighten all screws and nuts securely making certain fender is aligned at cowl and hood areas.

(4) Connect head lamp wires and install grille to fender nuts. Connect the battery ground strap.

RADIATOR YOKE SUPPORT

REPLACEMENT

Removal

(1) Drain radiator and remove hoses from radiator.

(2) Remove radiator attaching screws and radiator.

(3) Remove hood lock striker bar, horn and

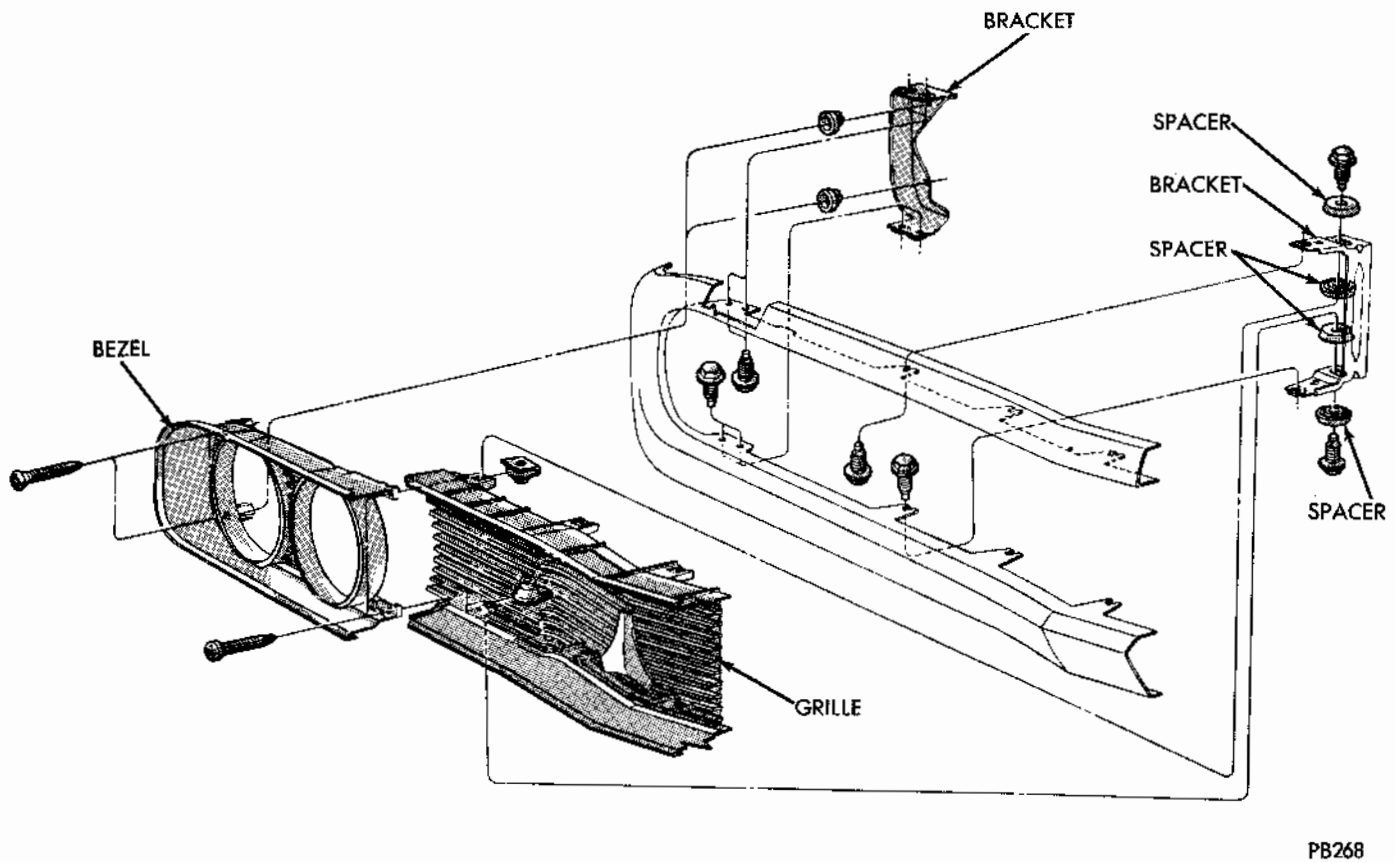

Fig. 14 - Grille Attachment Sedans.

MyMopar.com

headlamp wiring from yoke support.

(4) From under the fenders remove the wheelhouse to yoke support attaching screws.

(5) Remove support to frame attaching screws and remove radiator yoke support from engine compartment.

Installation

(1) Position yoke support into the engine compartment. Install the frame to yoke support screws finger tight.

(2) From under the fenders, install splash shield to yoke support screws finger tight only.

(3) When all attaching screws have been installed, tighten progressively.

(4) Attach the horn and lamp wires to the yoke support with the plastic straps.

(5) Install radiator, hoses, fill cooling system and inspect for leaks.

AIR SHIELD AND CROSS BAR

Refer to (Figs. 10 and 11) for air shield and cross bar attaching points.

BUMPERS

ATTACHMENT

Refer to (Fig. 12 and 13) for bumper attaching points.

GRILLE

ALIGNMENT AND REPLACEMENT

Refer to (Figs. 14, 15 and 16) for grille attaching points. The grille must be held against the front face of the fenders at the outer edges to avoid stressing or fracturing the grille. Care must be taken to protect the textured grille from high temperature during repairs.

DOORS

The service procedures for internal door components do not include obvious operations, such as removing door or quarter panel trim panels, testing operation of windows or inspecting glass fit after adjustments or replacement have been performed.

ALIGNMENT

Up and Down

Adjustment of the door can be made at either the pillar or door hinge halfs (Fig. 17).

In and Out

Adjustment is made at the door hinge half. **Adjust**

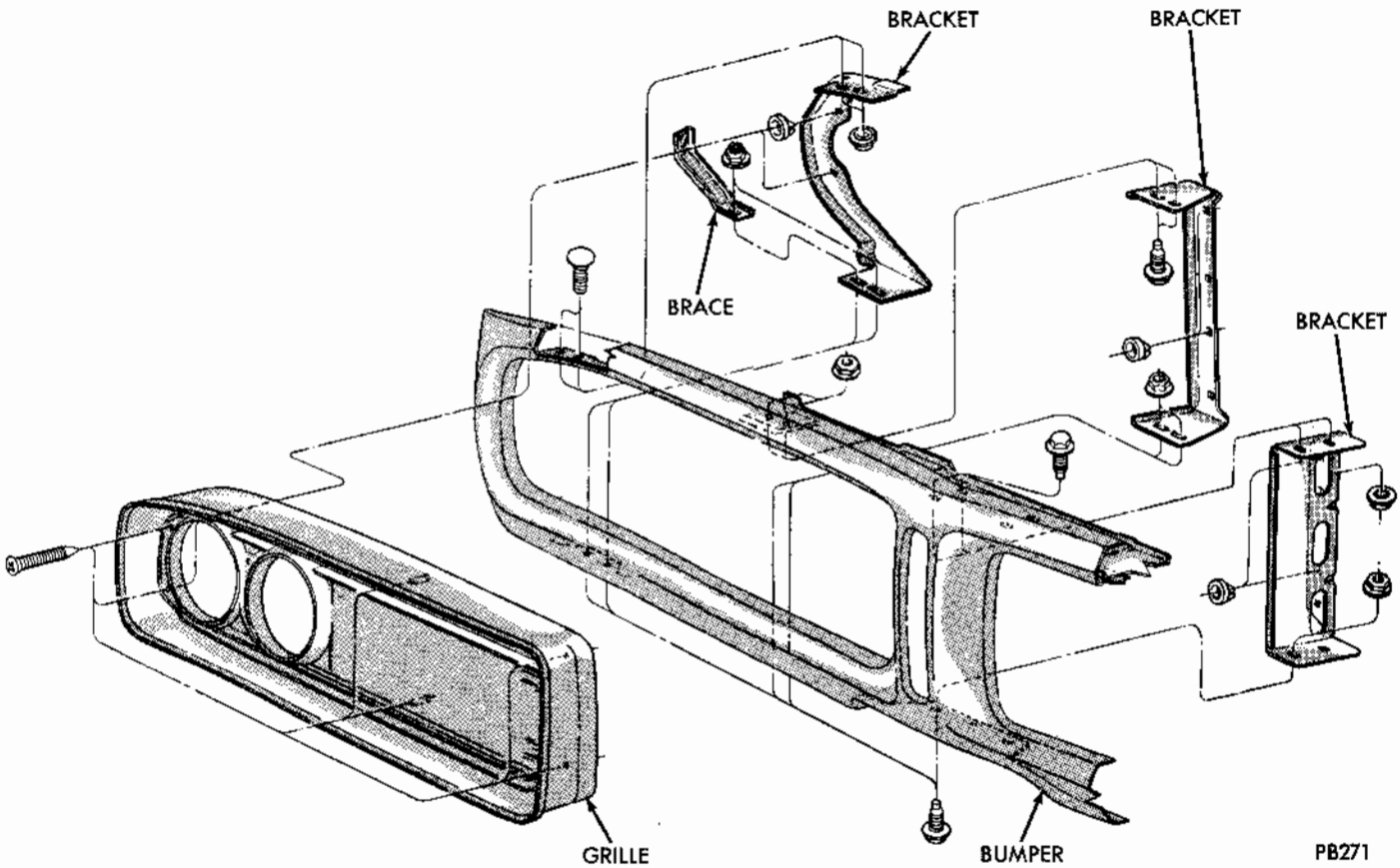

Fig. 15 - Grille Attachment-Charger 500.

MyMopar.com

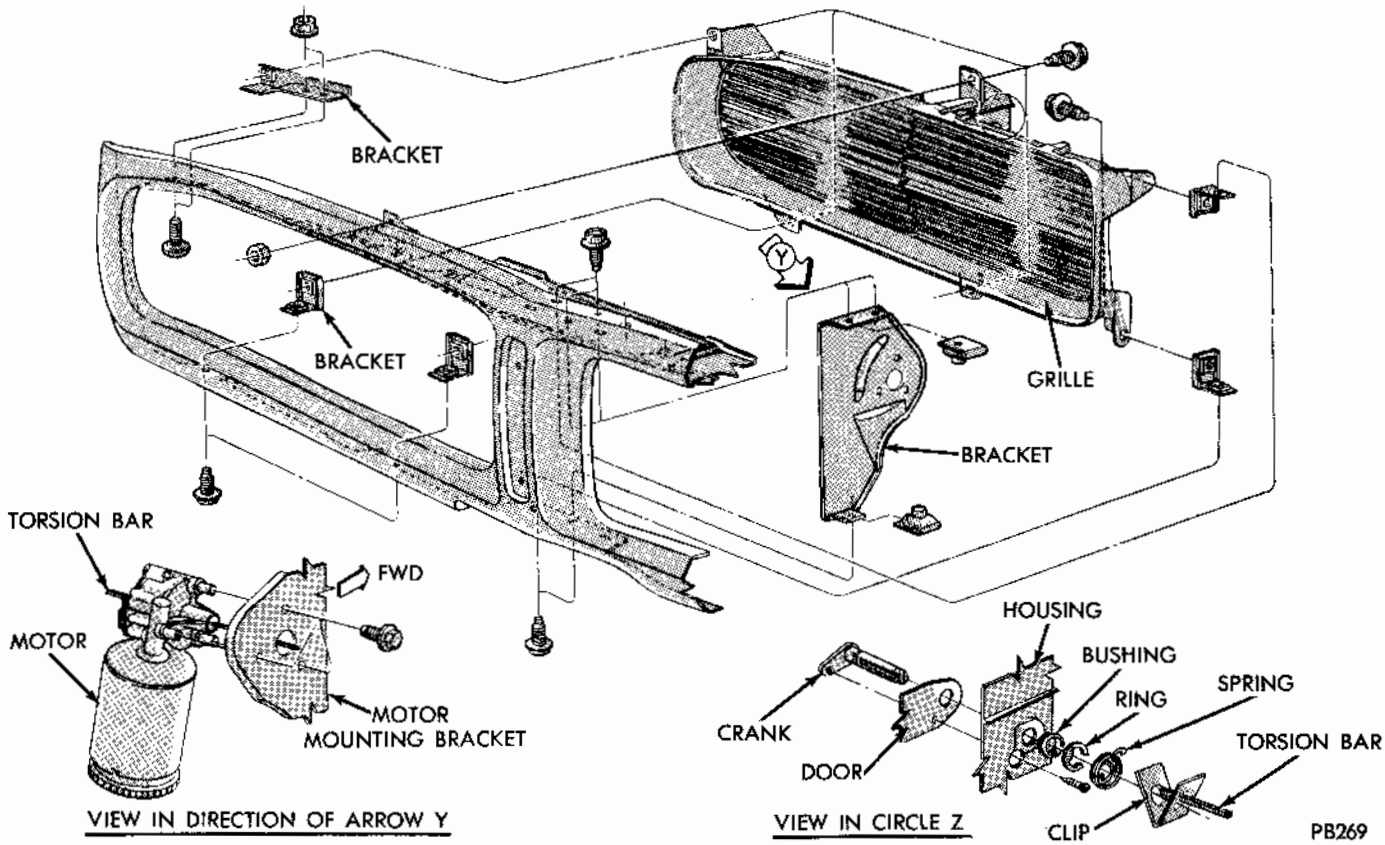

Fig. 16 - Grille Attachment-Charger

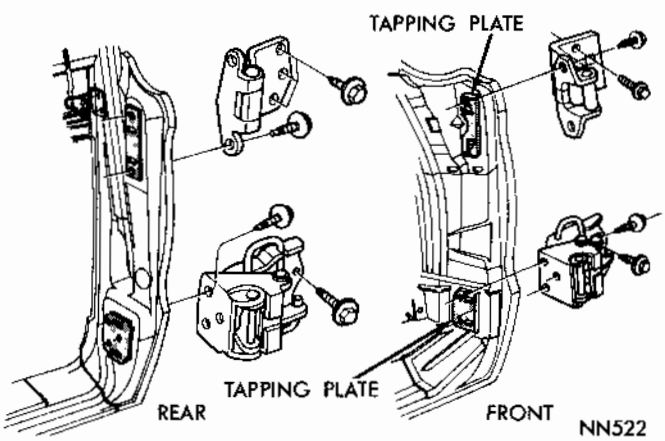

Fig. 17 - Door Hinges

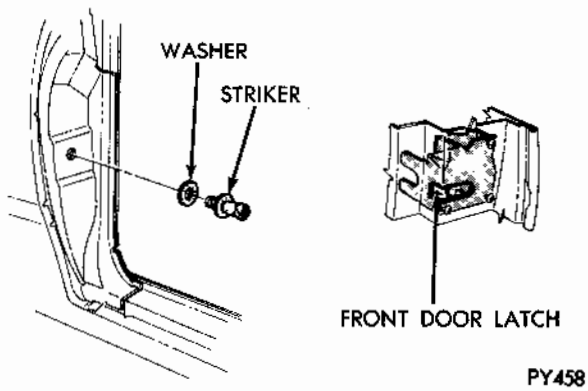

Fig. 18 - Door Striker

only one hinge at a time. Raising outer end of door moves upper part of door forward, when in closed position. Lowering lower part of door moves lower part forward, when in closed position.

Fore and Aft

Adjustment is made at the pillar hinge half. **Adjust only one hinge at a time.** Raising outer end of door, moves upper part of door into door opening. Lowering outer end of door, moves lower part of door into door opening.

STRIKER

The door strikers (Fig. 18) are attached to the pillars. Oversize holes permit up and down and in and out movement. Fore and aft adjustment is made by adding or removing shims between the striker and post. The striker bolt should be adjusted to lift the door slightly.

DOOR REPLACEMENT

Front Door (All Models)

MyMopar.com

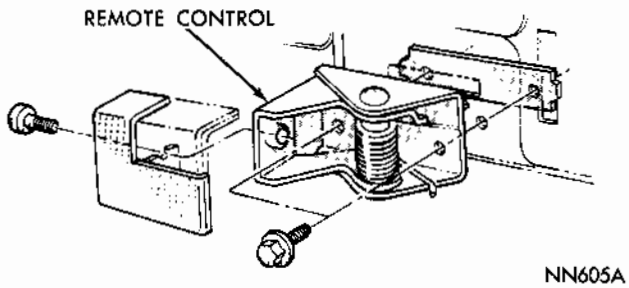

Fig. 19 - Remote Control Handle

Removal

On vehicles with electric windows, disconnect the wires from window regulator motor and remove from door assembly.

(1) With door in wide open position, place a jack, with a block of wood or pad on lifting plate of jack, as near hinge as possible. (This will hold weight of door as hinge bolts are loosened.)

(2) Remove door interior trim and hardware.

(3) Scribe a line around upper and lower hinge plates on door panel.

(4) Remove hinge attaching screws from door and remove door for further disassembly if necessary.

Installation

(1) With door inner hardware installed, place door in position in door opening, supported by a padded jack.

On electric window lifts, install wiring in doors and attach to motor and control switch.

(2) Locate door hinge plates on door panel and install hinge attaching screws finger tight only.

(3) Adjust jack to align hinge plate scribe marks and tighten attaching screws.

(4) Complete door aligning procedure, and install door interior trim and hardware.

REAR DOOR (All Models)

Removal

On vehicles with electric window lifts disconnect wires from motor and control switch and remove from door prior to door removal.

(1) Open rear door and place a padded jack under door near the hinges.

(2) Remove door interior trim and hardware.

(3) Scribe aligning marks around hinge plates on door frame.

(4) Remove hinge attaching screws from door and remove door from body.

Installation

(1) With rear door inner hardware installed, support door on a padded jack and position door on hinges.

(2) Install attaching bolts finger tight.

(3) Align hinges with scribe marks.

(4) Tighten attaching screws and test door for alignment.

(5) Install door interior trim and hardware.

On vehicles with electric window lift, insert wiring into the door and attach wiring to motor and control switch prior to installation of trim panel.

HINGE REPLACEMENT

The door hinges (Fig. 17) are attached to the doors by screws accessible from outside. The front door hinges are each attached to the "A" post by three screws.

The rear door upper hinges (on hardtop and station wagon models), are attached to the "B" post by three screws accessible from outside. On sedan models, the screws are accessible through an access hole in the "B" post.

INSIDE HANDLES

Window Regulator Handle

The window regulator handles are retained on the shaft with an allen set screw. The handles should be positioned on the shaft approximately in a horizontal position with the knobs facing rearward.

Remote Control Handle

The remote control handle (Fig. 19) is attached to the control unit with a screw at the rear inner end.

ARM RESTS

The arm rests are retained by two metal screws inserted at the bottom of the arm rest base. The pad and base can be separated and if necessary, the pad may be recovered.

TRIM PANELS

Door Trim Panel Replacement

(1) Remove inside handles and arm rests.

(2) Remove screws attaching trim panel to door inner panel.

(3) Insert a wide blade screw driver between trim panel and door frame next to retaining clips and snap retaining clips out of door panel. Remove trim panel.

(4) Before installing door trim panel, inspect condition of watershield.

MyMopar.com

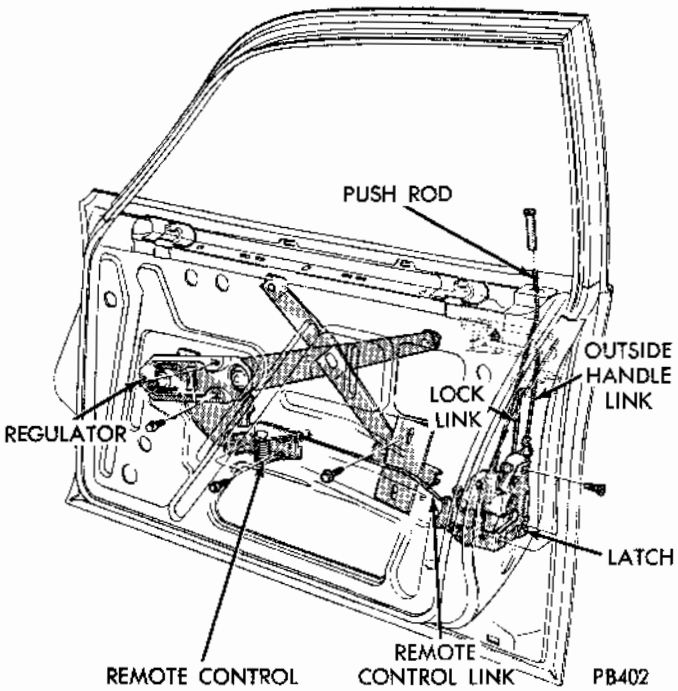

Fig. 20 - Front Door Remote Control

(5) Be certain the escutcheon spring is placed on the regulator shafts.

(6) Align trim panel retaining clips with holes of door frame and bump into place with heel of hand.

(7) Install trim panel to door screws.

(8) Install escutcheon washer, handles and arm rest.

LOCK ASSEMBLY

Remote Control (Manual)

Removal

(1) Raise door glass.

(2) Remove screws attaching remote control base to door panel (Figs. 19 and 20).

(3) Remove link from remote control lever.

(4) Remove control through large opening in door.

Installation

(1) When installing the remote control assembly, coat parts with lubriplate.

(2) Install assembly through door opening and connect link to the control lever.

(3) Install attaching screw and test operation of control.

LOCK REPLACEMENT

Removal

(1) Disconnect handle to lock link (Figs. 20 and 21) from lock by pulling link outward at lock.

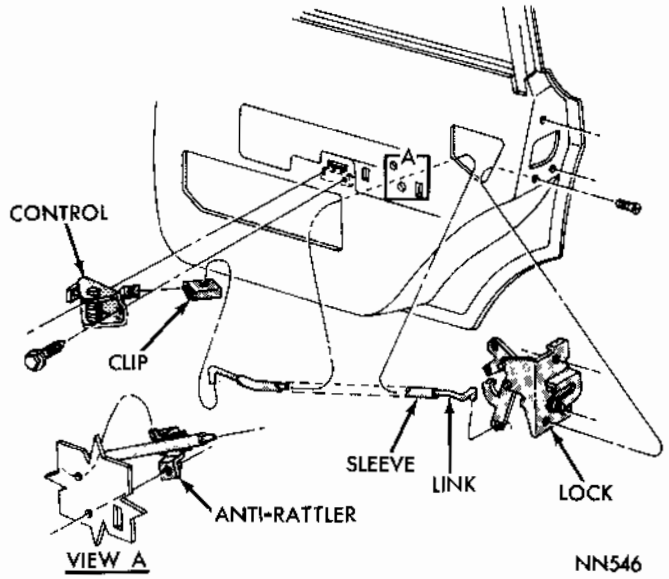

Fig. 21 - Rear Door Remote Control

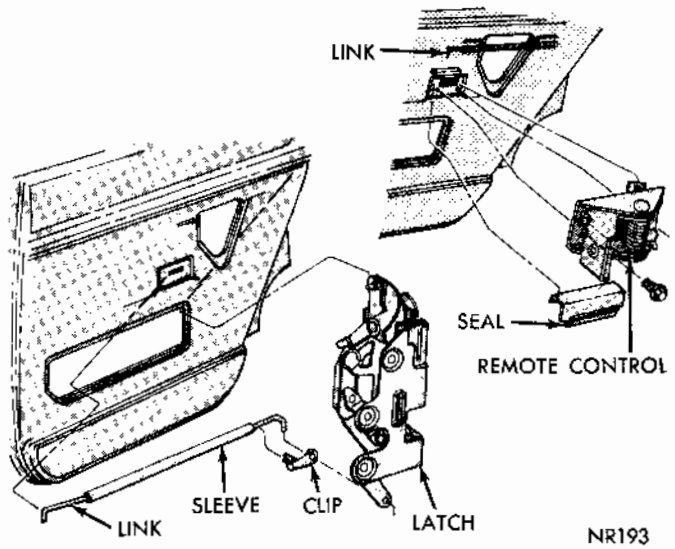

Fig. 22 - Rear Door Remote Control and Latch

(2) Disconnect locking lever rod (front door only) from lock assembly (Fig. 20).

(3) Disconnect lock control rod from lock assembly (Fig. 20).

(4) Remove screws attaching lock assembly to door.

(5) Rotate lock assembly and disconnect remote control link when removing lock.

(6) Lubricate all moving points of lock assembly.

Installation

(1) Position lock assembly in door and connect remote control link to lock lever.

(2) Install lock retaining screws.

(3) Connect handle to lock link.

(4) Connect locking lever rod (front door only)

MyMopar.com

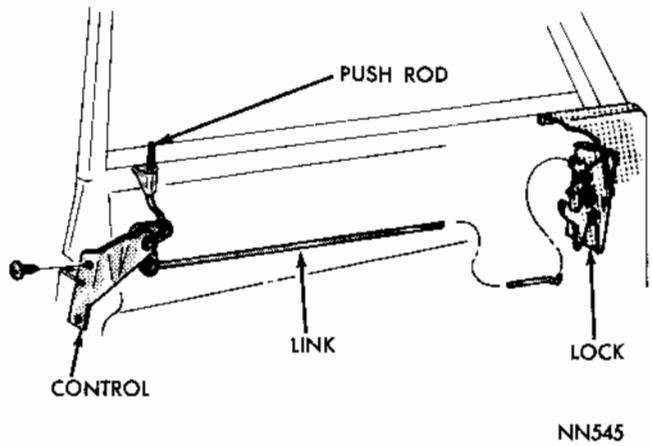

Fig. 23 - Rear Door Locking Control

to lock assembly.

(5) Connect locking lever rod and remote control link to lock.

LOCK CYLINDER

Removal

(1) With window in the up position, disconnect cylinder link (Figs. 22 and 23) from clip on lock lever **(4 door only)** and from cylinder.

(2) **On 2 door models** disconnect lock link from clip on lock lever, remove link control bracket mounting screws and remove cylinder link from cylinder.

(3) Remove retainer from cylinder body and cylinder from door.

Installation

(1) Position cylinder in door and install retainer on cylinder body.

(2) Connect the cylinder link to cylinder arm and to clip on lock lever **(4 door models).**

(3) On **2 door models** connect cylinder link to cylinder, position link bracket on door face and install attaching screws. Connect lock link to lock.

OUTSIDE HANDLE—FRONT DOOR

Removal

(1) With door glass in up position, remove door handle attaching nuts from mounting studs (Fig. 24) and link from handle to lock.

(2) Lift handle up and remove from door.

Installation

(1) Install handle into door opening. Engage link from handle to lock.

(2) Attach retaining nuts and test operation of the handle.

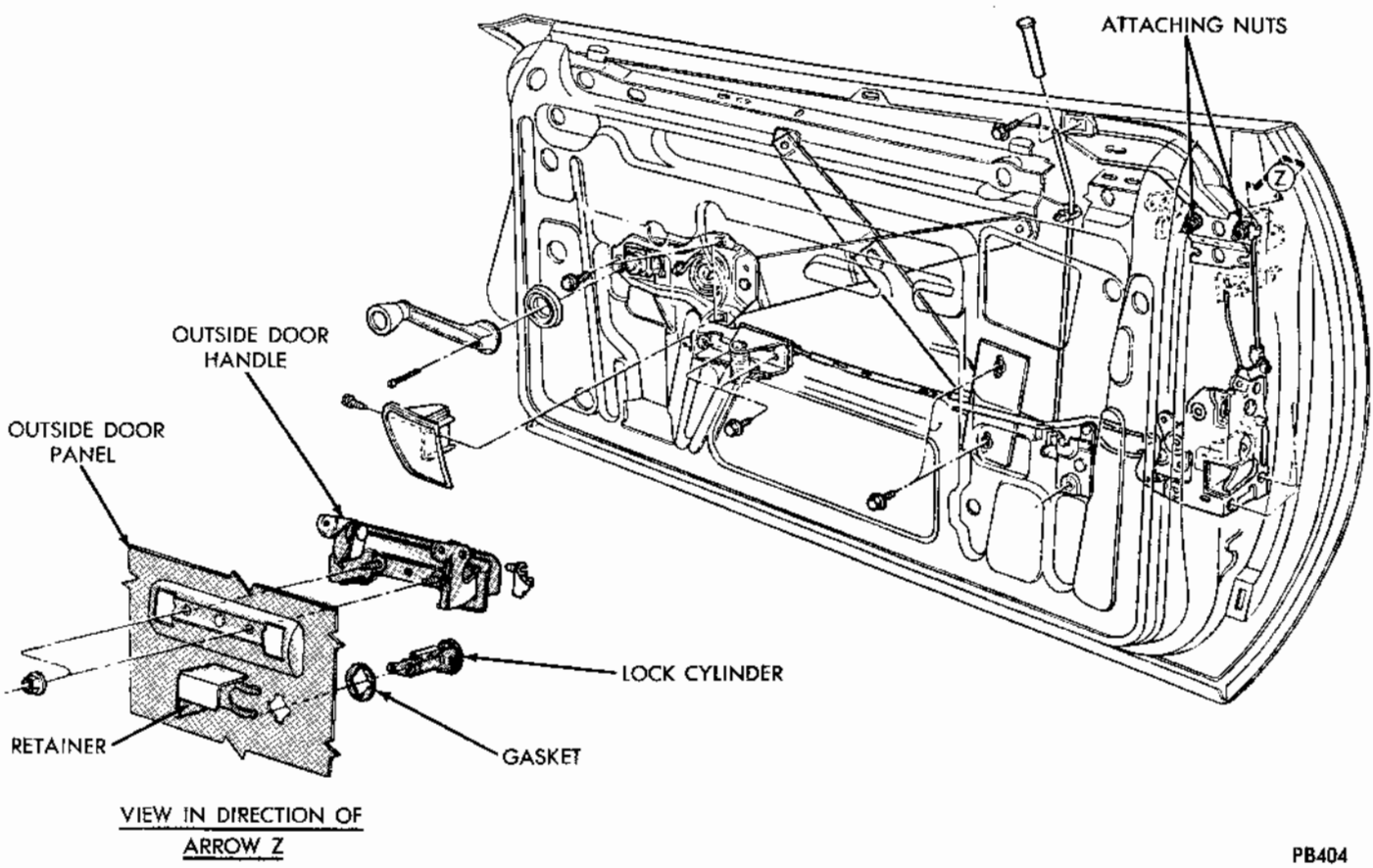

Fig. 24 - Front Door Handle

MyMopar.com

REAR DOOR

Removal

(1) With door open and glass in up position remove retainer from link at handle connector.

(2) Lift outside handle and remove link from handle connector.

(3) Remove nuts attaching handle to door and remove handle.

Installation

(1) Position handle in door and install mounting nuts.

(2) Lift handle and position link over connector on handle.

(3) Install retainer over link and connector.

WEATHERSTRIPS AND WINDCORDS

Door Weatherstrips

Make sure all old weatherstrip particles and cement are removed before installing new weatherstrip.

Sedan and Station Wagon Models

(1) Apply lower half of weatherstrip, starting at hinge face at belt line, working fasteners into holes in shut face of doors.

(2) Apply a 1/8 inch bead of cement to weatherstrip seating area on door upper and lower areas.

(3) Install upper half of weatherstrip on door, indexing at the upper corners.

(4) Work weatherstrip from index points to a point midway between them. **Avoid puckering or stretching of weatherstrip.**

Hardtop—Models

(1) Apply a coat of cement to weatherstrip contact area on door inner and outer panels at belt line and to contact surface of weatherstrip.

(2) Position pillar seal on weatherstrip, making sure lip of weatherstrip dove tails into groove of seal and install screws.

(3) Install weatherstrip on door, indexing at top of door at belt line with two fasteners.

Roof Rail Weatherstrip

Refer to Figure 25 for the attaching points and methods of cementing.

The weatherstrip retainers are adjustable through the use of elongated attaching holes. The weatherstrip can be moved in or out for the best possible fit and seal along the top edge of the frame, door glass and quarter glass.

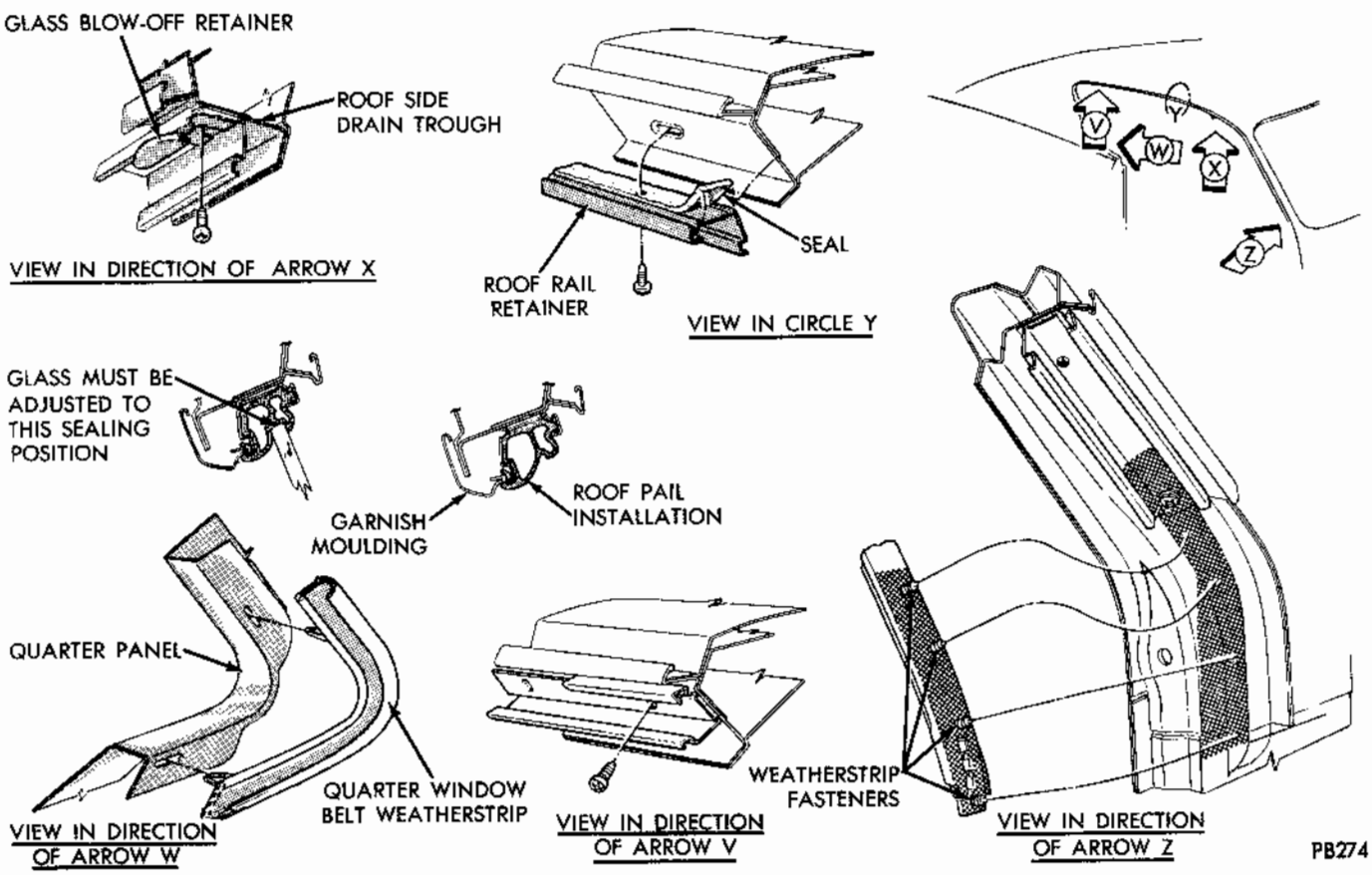

Fig. 25 - Roof Rail Weatherstrip

MyMopar.com

The glass up-stop must be adjusted so the fully raised glass just curls the outer lip of weatherstrip against the inner lip.

When the up-stop, roof rail weatherstrip and glass are properly adjusted, the outer lip of weatherstrip will seal along the top edge of the glass and the inner lip of weatherstrip will seal along the upper inside edge of glass.

Windcords

Refer to Figure 26 for the starting points and method of attachment for the windcords.

TAILGATE

Station Wagon Models are equipped with a "two way" tailgate that can be opened as a swing-out type door with the glass in the raised or lowered position. The tailgate can be opened in the conventional tailgate manner.

The sequence of adjusting the linkage should be followed as outlined in this manual, to ascertain correct locking and releasing operations.

Vertical Adjustment

1. Hinge pin adjustment, (Fig. 27).

A. On the lower left side loosen the pin lock nut.

B. Adjust the pin to proper height. Proper adjustment is obtained when the bushings on the body and gate halves of upper hinge are just touching after the adjustment has been made, tighten lock nut.

2. Striker adjustment.

A. Loosen the plate and striker so that the plate screws and striker plate can be moved up or down.

B. Tighten plate and striker at desired position. BOTH THE UPPER AND LOWER STRIKERS SHOULD BE ADJUSTED TO CARRY EQUAL WEIGHT OF THE TAILGATE.

In and Out Adjustment

1. Loosen the three lower hinge attaching nuts and adjust the tailgate to the desired position by removing or installing the necessary shims and then tighten bolts. The slotted holes in the lower hinge also provides side to side adjustment.

2. Upper and lower striker adjustment use same procedure as vertical adjustment.

Lateral Adjustment

1. Lateral adjustment can be made at the upper hinge by removing or installing shims as necessary.

2. Elongated slots in the lower hinge provide lateral adjustment of the tailgate.

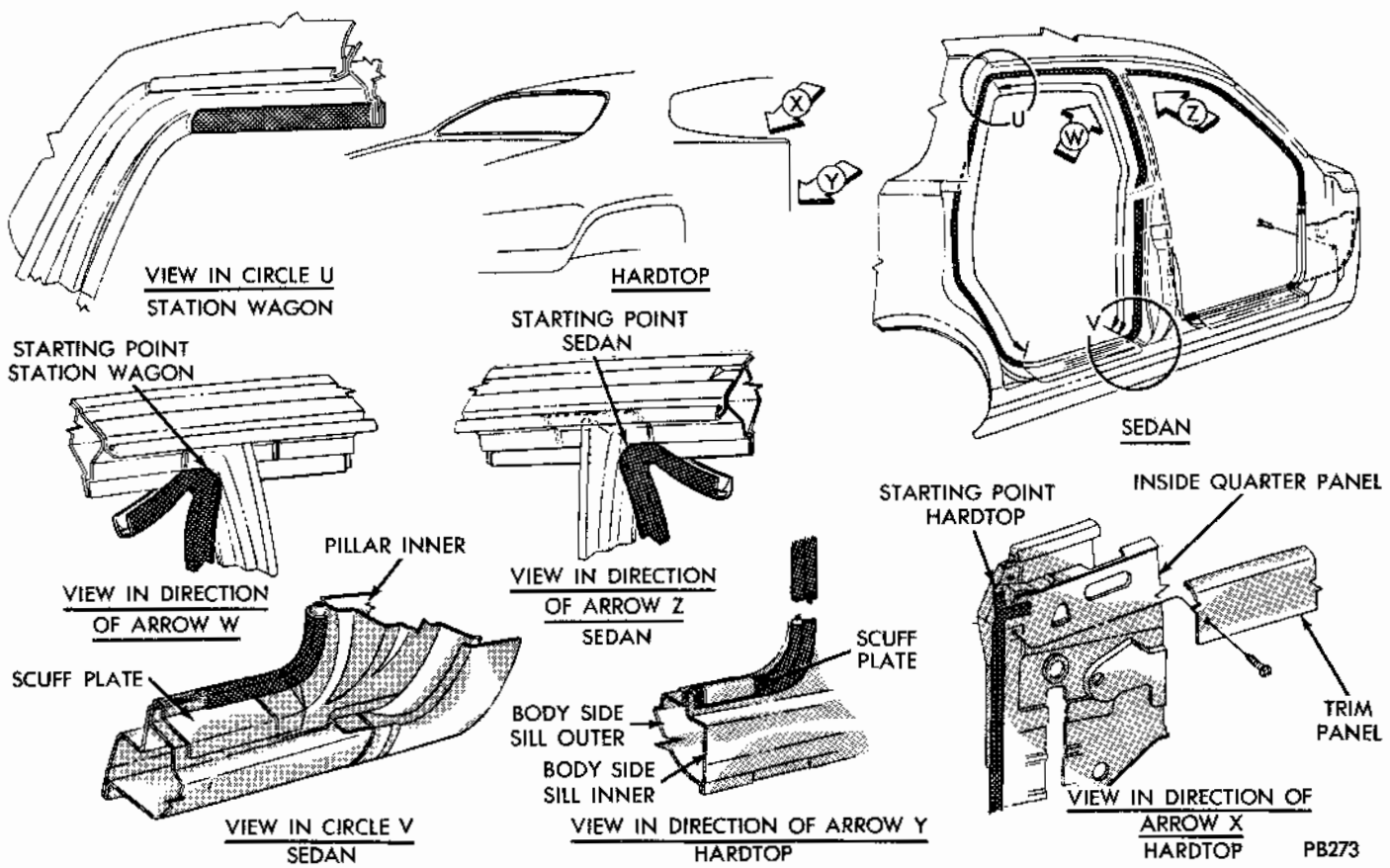

Fig. 26 - Windcord Attachment

MyMopar.com

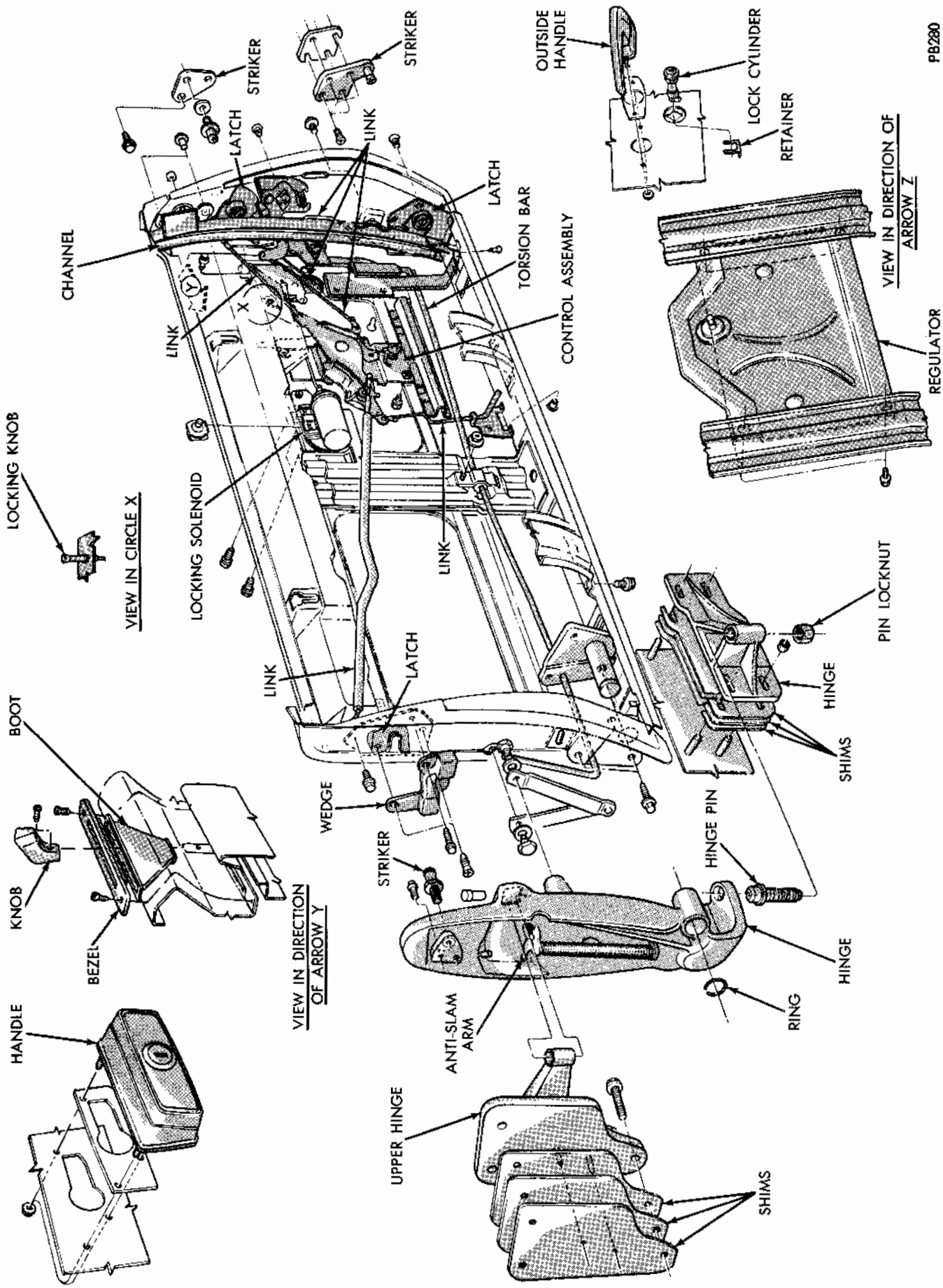

Fig. 27 - Tailgate Application

MyMopar.com

Door Sag

This adjustment can be made by moving the upper (body half) laterally closer to the body pillar and by moving the lower hinge toward the center of the car.

CARE must be taken in making this adjustment to avoid the outer edges of the tailgate rubbing against the body.

TORSION BAR

Removal

Remove trim panel and disconnect terminals at control switch. Disconnect electrical leads.

(1) Remove check arm and torsion bar guide from pillar guide plates.

(2) Support tailgate on jacks or stands.

(3) Loosen hinge pivot pin locking screws (Fig. 27).

(4) Use a pencil and outline hinge plate position on pillar post for future assembly.

(5) Remove hinge plate attaching bolts from pillar post.

(6) Slide hinge plate and torsion bar in through guide toward center of tailgate.

(7) Lower tailgate down and out of body opening.

Installation

(1) With torsion bar and hinge plates pushed in toward center of tailgate, engage hinge plates into lower opening of body.

(2) Attach hinge plate attaching bolts into pillar posts and locate hinge plates in relation to previous marked positions.

(3) Tighten attaching bolts firmly enough to hold position and inspect alignment.

(4) Close tailgate and center in opening.

(5) Attach torsion bar bracket to pillar post.

(6) Open tailgate and tighten locking screws on hinge pivot pin.

(7) Connect electrical leads and install trim panel.

(8) Operate tailgate window and inspect alignment.

TRIM PANEL

The tailgate trim panel is attached with metal screws. Clean all foreign material from the seating area of the trim panel before installing.

LOCK AND CYLINDER

To replace the lock assembly (Fig. 27) remove trim panel glass and glass runs. The lock assembly is retained on tailgate by screws accessible at end of tailgate. The lock cylinder assembly is retained on the outer panel with a horseshoe type retainer.

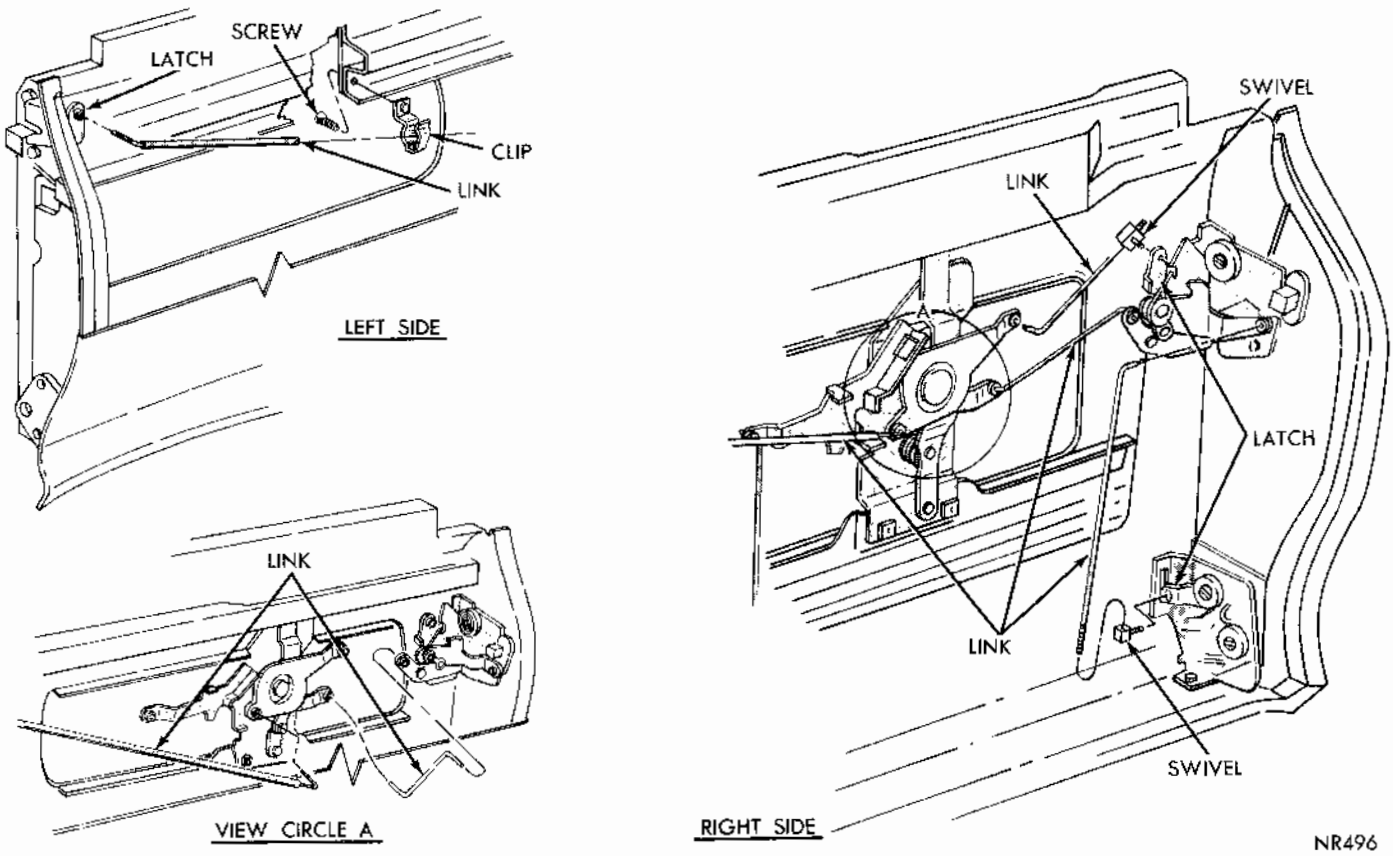

Fig. 28 - Lock Linkage Adjustments

MyMopar.com

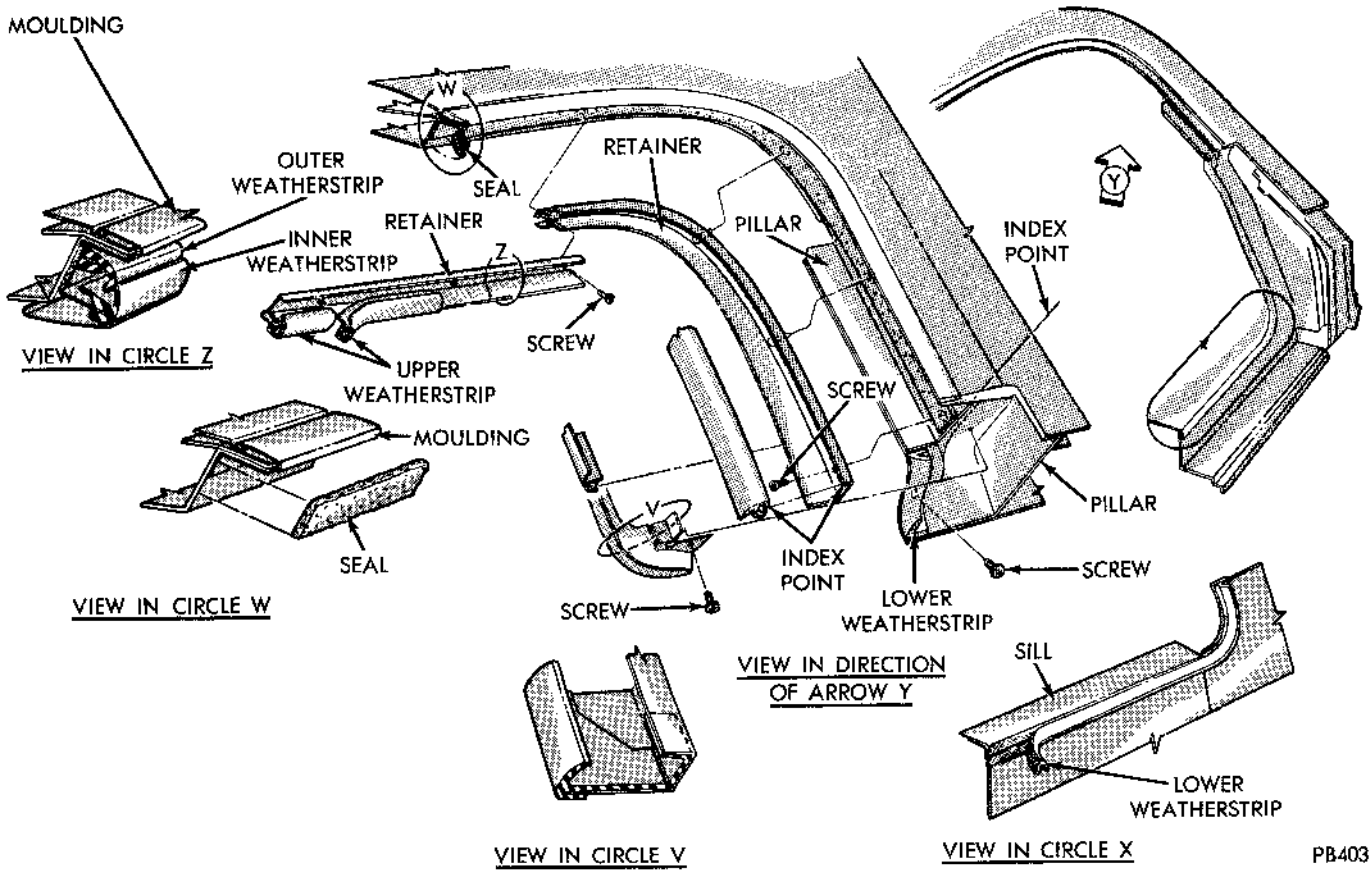

Fig. 29 - Tailgate Weatherstrip

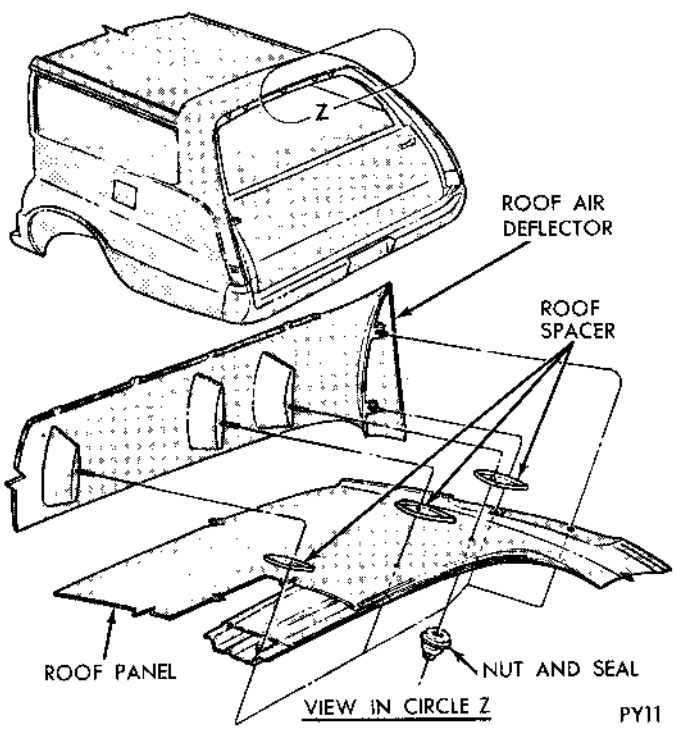

Fig. 30 - Roof Rear Air Deflector

LOCK LINKAGE

Installation and Adjustment (Fig. 28)

The lower right to upper right latch link and upper right lock to release regulator mechanism arm link can only be adjusted to three total turns from nominal position for all release, interlocking and latch engaging operations.

(1) Inspect locks to make certain they are in the fully latched position.

(2) Install link to lower right latch detent clip, raise upper right lock actuator until it contacts upper latch lock detent.

(3) Adjust threaded portion of link until aligned with clip hole of actuator and insert link into clip.

(4) Connect link to upper right lock remote control lever and to release regulator mechanism actuator.

(5) Install link from release regulator arm to the glass restraining bracket.

(6) Install link into release regulator mechanism and upper left latch remote lever clip.

(7) Install link into lock remote lever.

(8) Take up all play in latch remote lever and release regulator mechanism arm and adjust link threaded end to this point.

MyMopar.com

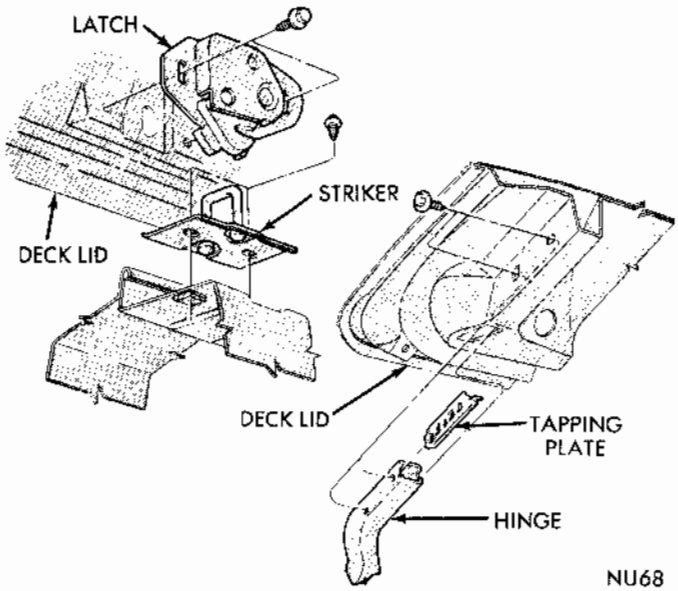

Fig. 31 - Deck Lid Hinge and Latch

(9) Install link into upper right lock remote lever and test operation of tailgate and door assembly.

TAILGATE WEATHERSTRIPS

The Roof Header Seal (Fig. 29), is cemented to the header and tailgate pillars.

The Roof Rail Retainer is attached to the Header and Pillars by screws.

The Tailgate Glass opening has both inner and outer weatherstrips. The inner consists of two weatherstrips that are a compression fit at the top center of opening.

The Outer Tailgate opening weatherstrip is one piece and indexes with the lower tailgate opening weatherstrip which is a two piece weatherstrip.

ROOF REAR AIR DEFLECTOR

The rear air deflector (Fig. 30) used on station wagon models is mounted on the roof by inserting the deflector studs through holes drilled in the panel and securing with sealing type nuts from the car interior. Tighten the nuts 75-115 inch-pounds.

DECK LID

ALIGNMENT

The deck lid hinge (Fig. 31) to lid attaching holes are slightly oversize, allowing slight to and fro, and, in and out adjustment.

REPLACEMENT

The deck lid is attached to each hinge by two screws. An assistant's aid is recommended when

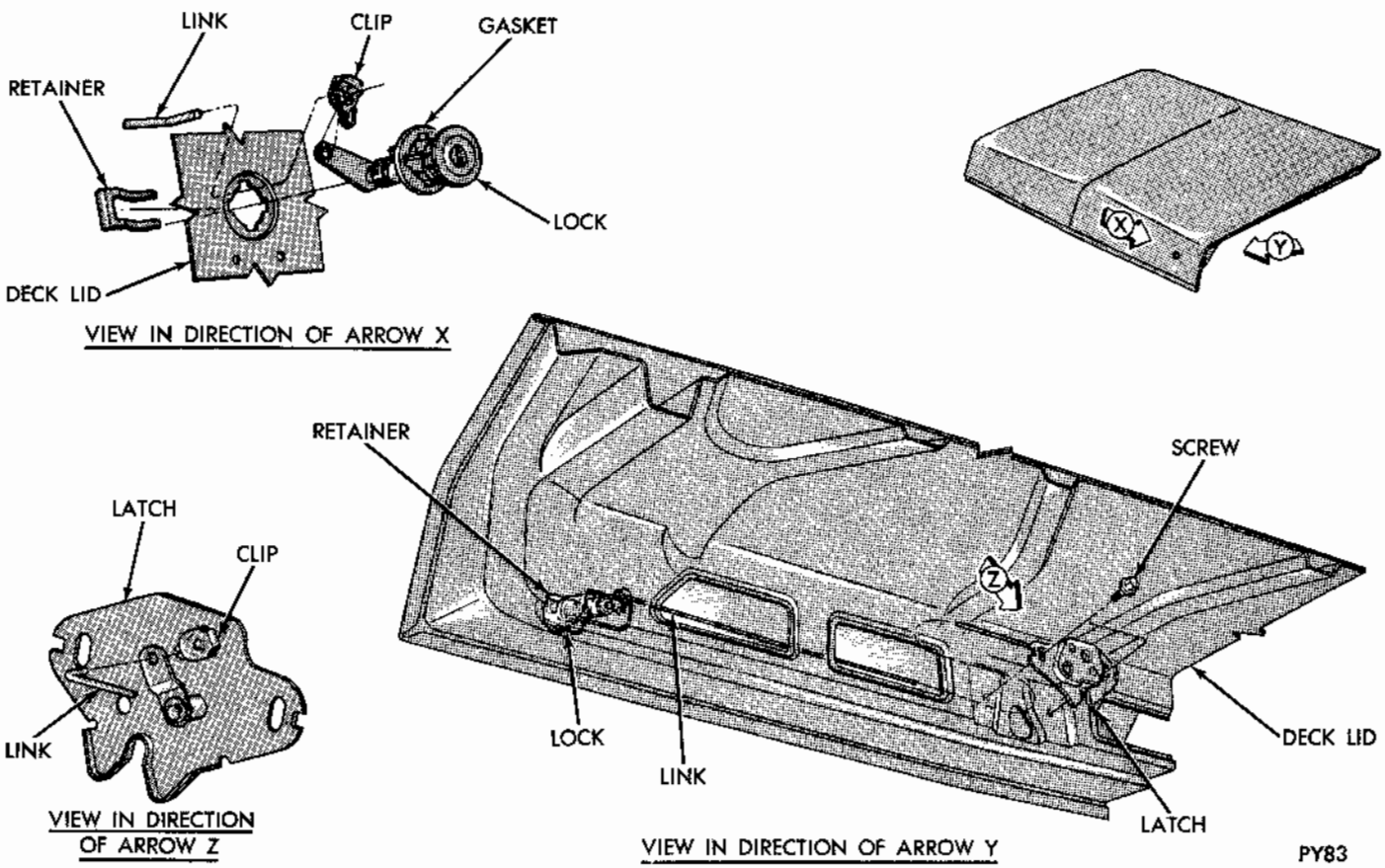

Fig. 32 - Deck Lid Lock and Cylinder

MyMopar.com

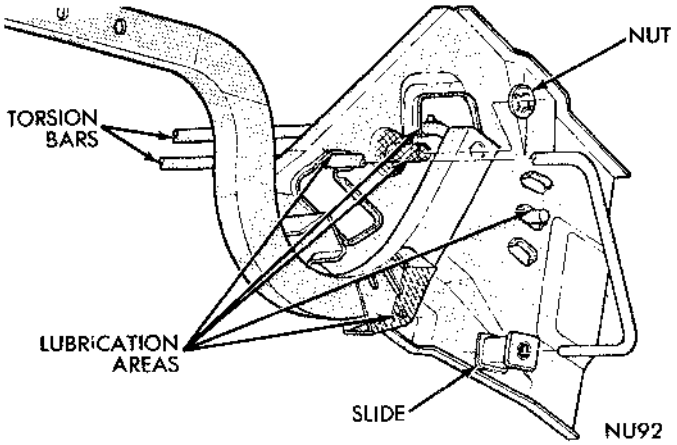

Fig. 33 - Deck Lid Torsion Bar

replacing lid to prevent it sliding rearward and damaging paint, also to aid in aligning of hinge screw holes when installing.

LOCK

REPLACEMENT

The deck lid lock (Fig. 32) is attached to the deck lid by two screws. Scribe location of lock mounting flanges to aid in installation.

Adjustment

Vertical adjustment of lock is made at the attaching screws and side adjustment is made at the striker attaching bolt.

Cylinder Replacement

The lock cylinder is retained by a spring steel "U" shaped clip (Fig. 32).

HINGE

Removal

(1) Remove deck lid assembly and disengage torsion bar from hinge (Fig. 33) being removed.

(2) Remove hinge to hinge bracket spring nut and remove hinge.

Installation

(1) Position hinge on bracket pin and install a new spring nut.

(2) Install deck lid, connect torsion bar and inspect alignment.

TORSION BAR

Removal

Use care when removing torsion bar as it is under a load. Release load from torsion bar slowly and remove from support bracket.

(1) Remove torsion bar (Fig. 33) from adjustment slot.

(2) Push bar out of roller in hinge arm and remove from hinge support.

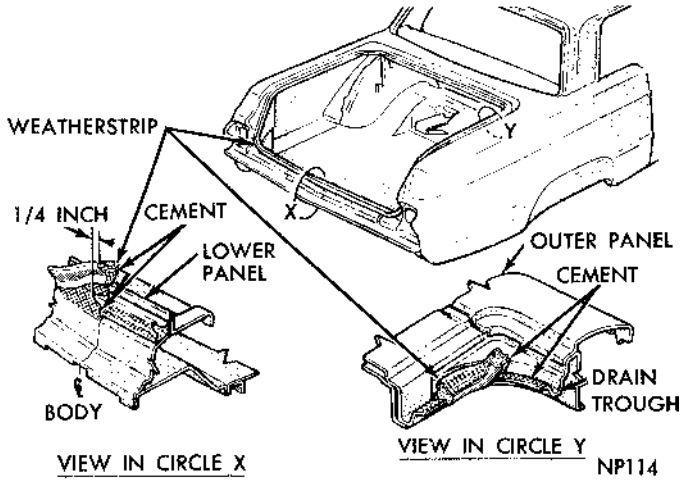

Fig. 34 - Deck Lid Weatherstrip

Installation

(1) Position torsion bar into hinge support and insert end into roller in hinge arm.

(2) Hook torsion bar into support bracket.

(3) Wind bar and insert end into center adjusting slot.

(4) Place lid in various open positions and test tension.

(5) Adjust bars until deck lid stays in open position.

WEATHERSTRIPS

Apply an even continuous coat of cement to entire weatherstrip contact surface of deck lid opening (Fig. 34). Install weatherstrip, make sure weatherstrip molded corners are correctly positioned.

VACUUM ACTUATED DECK LID LOCKS

The vacuum actuated deck lid lock release system (Fig. 35) consists of a vacuum tank mounted over the right front wheel housing, a push button control switch the glove box and a vacuum actuated diaphragm assembly connected to the lock. Vacuum is supplied to system from intake manifold. Rubber hoses are used to connect component units.

If failure of the system is accompanied with a rough engine idle, remove hose from manifold fitting tube and plug end of the tube. If engine idle improves noticeably, inspect hoses for possible leaks.

Should system fail to operate entirely, remove hose at the release diaphragm in deck lid and connect a vacuum gauge to hose. With engine running, actuate button in glove box while a helper

MyMopar.com

observes gauge. If no reading can be obtained, inspect for a pinched hose. A reading of less than 16 inches will indicate a leak in the system.

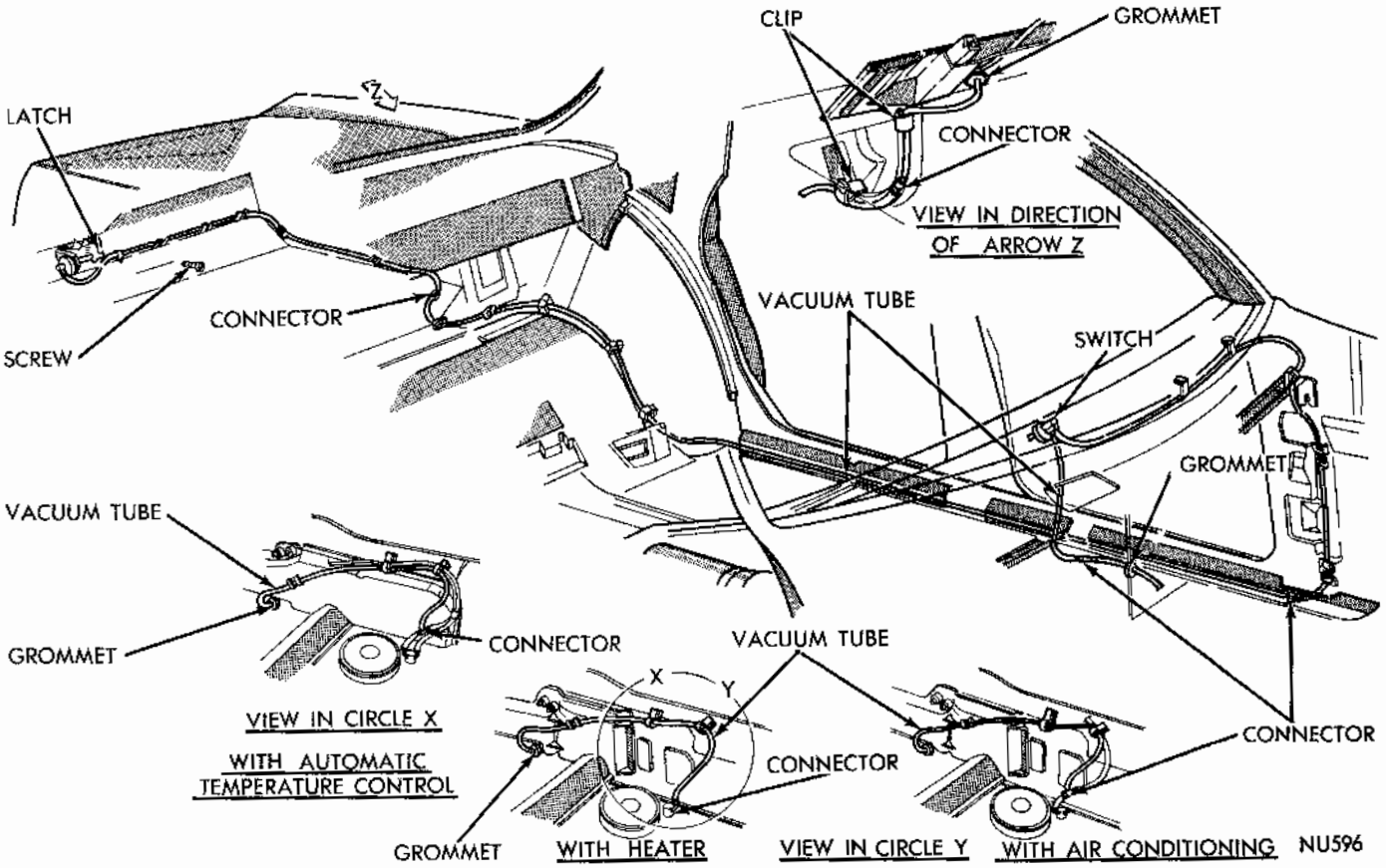

Fig. 35 - Vacuum Actuated Deck Lid Lock

SHEET METAL-DOORS

CHALLENGER

INDEX

	Page
Outside Air Vents	43
With Heater	43
Shelf Trim Panel	43
Scuff Plate	43
Cowl Seal to Cowl Panel	44
Cowl Side Trim Panel	44
Hood	45
Alignment	45
Replacement	45
Removal	45
Installation	45
Lock	45
Fender's	46
Alignment	46
Replacement	46
Removal	46
Installation	46
Radiator Yoke Support	47
Replacement	47
Removal	47
Installation	47
Bumper's	47
Front and Rear	47
Grille	47
Grille Panel Air Shield	47
Doors	49

MyMopar.com

Alignment 49
Up and Down 49
Fore and Aft 49
Door Latch Striker Adjustment 50
Door and Latch Adjustment 50
Latch Link 50
Door Lock Cylinder Linkage 50
Lock Cylinder 50
Remote Control 51
Outside Handle 51
Front Door Latch Locking Control 51
Door Trim Panel Installation 51
Quarter Panel Airshield 53
Installation 53
Quarter Panel Trim 53
Folding Top Pocket Panel Assembly 53
Pocket Panel Installation 53
Ash Receiver to Panel 54
Stone Deflector 54
Deck Lid 54
Alignment 54
Hinge Replacement 55
Removal 55
Installation 55
Torsion Bar Replacement 55
Deck Lid Lock Cylinder 55
Deck Lid Weatherstrip 55

OUTSIDE AIR VENTS (Fig. 1)

With Heater

The left side vent is attached to the cowl assembly and the right side vent is part of the heater unit (Fig. 1). Vents are not available with air conditioning.

Shelf Trim Panel (Fig. 2)

(1) Place shelf trim panel face side down on bench.

(2) Remove gated section of silencer for rear window defogger or rear speaker or both.

(3) Insert fastener into retainer on shelf trim panel.

(4) Position and align shelf trim panel to metal shelf panel and snap in place.

Scuff Plate (Fig. 3)

(1) Assemble spring nut to quarter trim panel.

(2) Position scuff plate to body side sill and secure with screws.

Dash Liner Installation (Fig. 4)

(1) Remove gated section for models with manual transmission and gated hole for windshield washer foot pump.

(2) Position liner assembly to dash panel and secure with fastener.

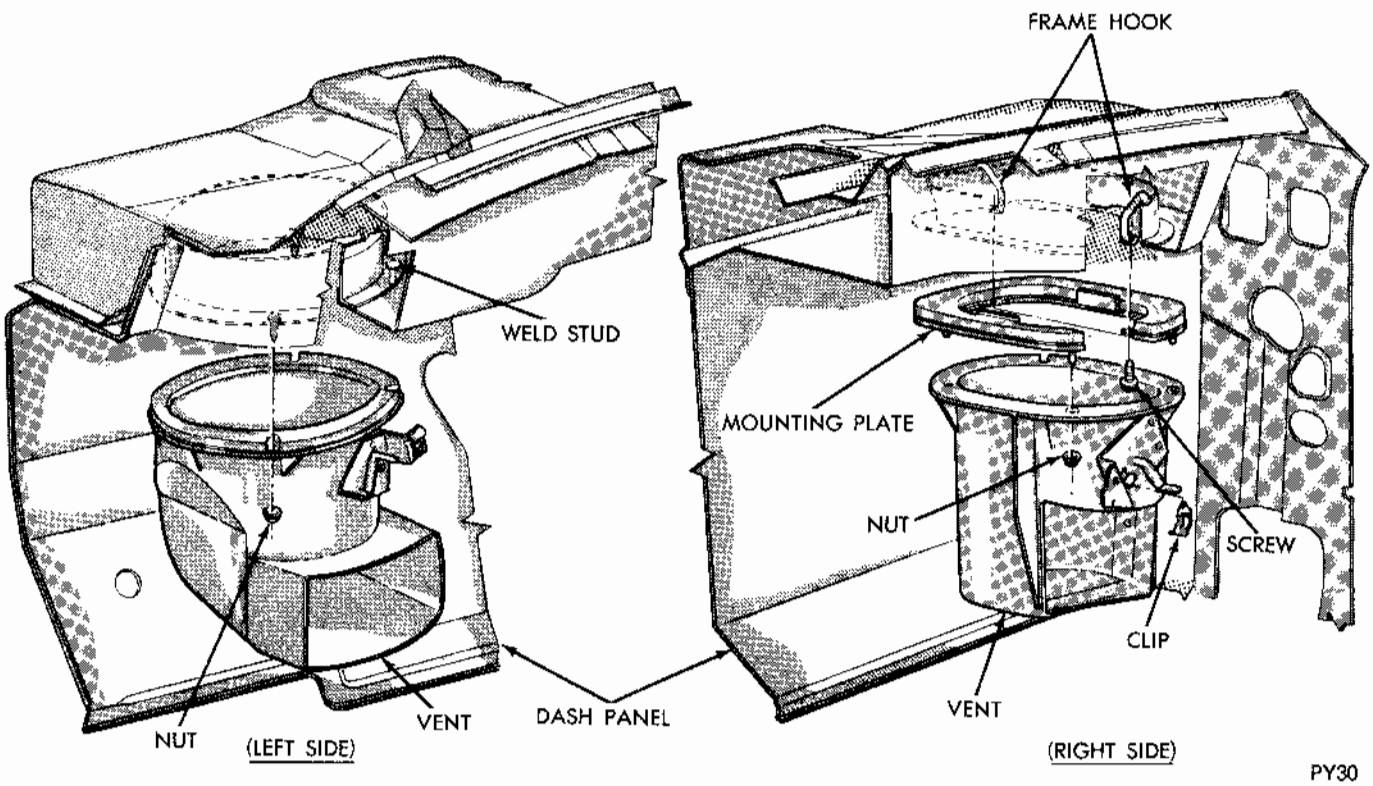

Fig. 1 - Outside Air Ventilation

MyMopar.com

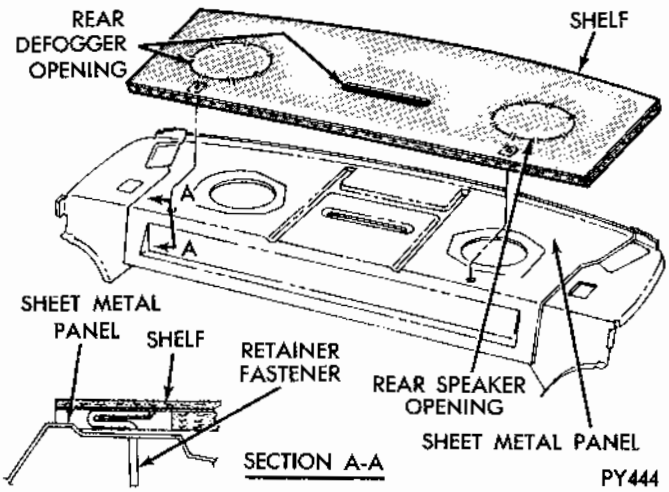

Fig. 2 - Shelf Trim Panel

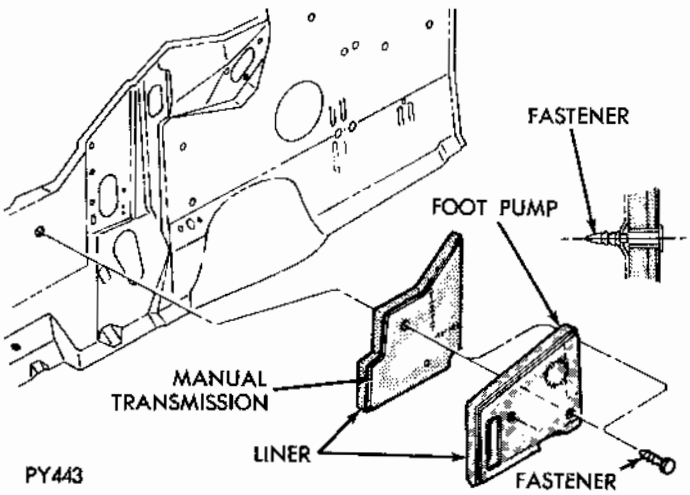

Fig. 4 - Dash Liner Installation

Cowl Seal to Cowl Panel (Fig. 5)

Position seal assembly to hood panel and fasteners, align fasteners to holes in cowl top panel and secure by inserting fasteners into holes.

Cowl Side—Trim Panel (Fig. 6)

(1) Assemble spring nut to cowl trim panel.

(2) Apply cement to felt side of silencer, and cowl side trim rear.

(3) Position cemented surface of silencer to panel, cowl side trim assembly. Press down firmly to obtain proper adhesion.

(4) Place assembly to cowl side inner panel. Align holes and secure with screw.

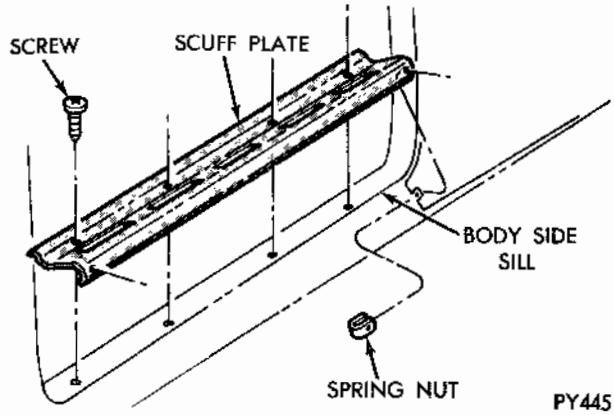

Fig. 3 - Scuff Plate

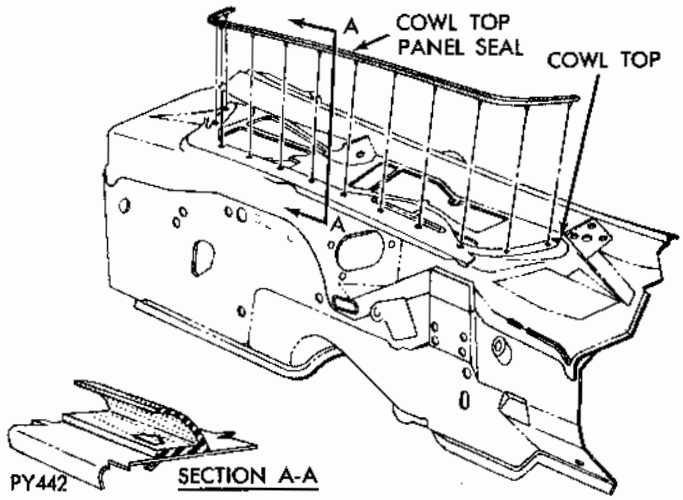

Fig. 5 - Cowl Seal To Cowl Panel

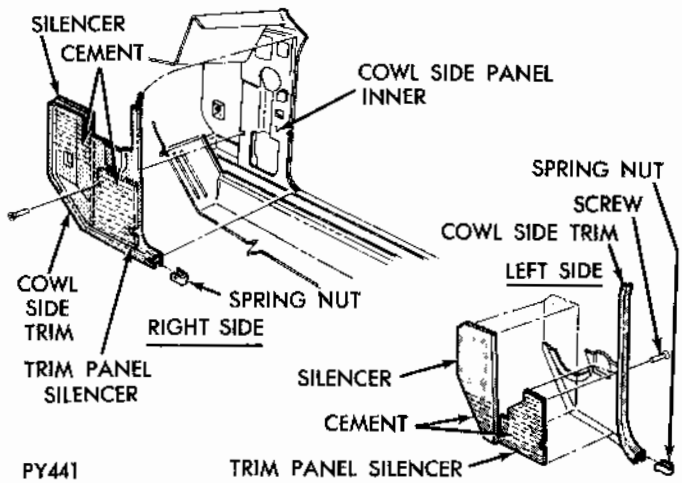

Fig. 6 - Cowl Seal Trim Panel

MyMopar.com

HOOD

ALIGNMENT

Prior to making any hood adjustment inspect clearances and alignment of hood sides in relation to cowl, fenders and grille. The cowl adjustment must be made first.

REPLACEMENT

Removal

(1) Place a protective covering over cowl and fender area.

(2) Mark outline of hinges on hood to aid in installation.

(3) With an assistant, remove hinge-to-hood bolts (Fig. 7) and remove hood assembly. **Use care not to permit hood to slide rearward and damage painted surfaces of the cowl and fender areas.**

Installation

(1) With an assistant, position hood on hinges and install bolts. Do not tighten.

(2) Align scribe markings on hood with hinge and tighten screws to hold in position.

(3) Close hood and inspect alignment.

(4) Adjust alignment (Figs. 7 and 8), tighten bolts and remove protective coverings.

LOCK AND HOOD BUMPERS (Fig. 8)

To adjust lock (Fig. 8) loosen attaching screws and raise or lower until correct adjustment has

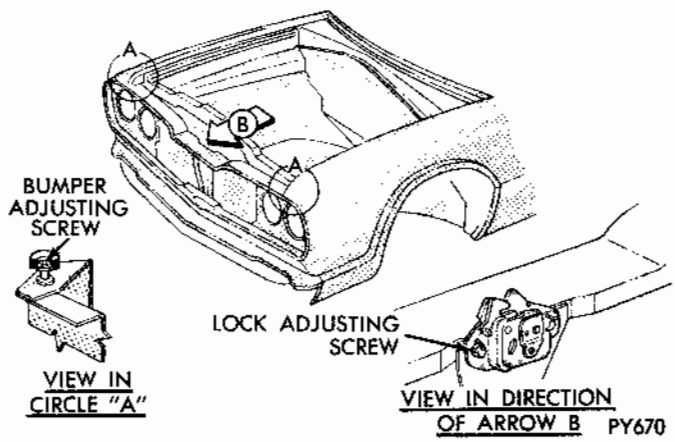

Fig. 8 - Hood Lock and Bumper's

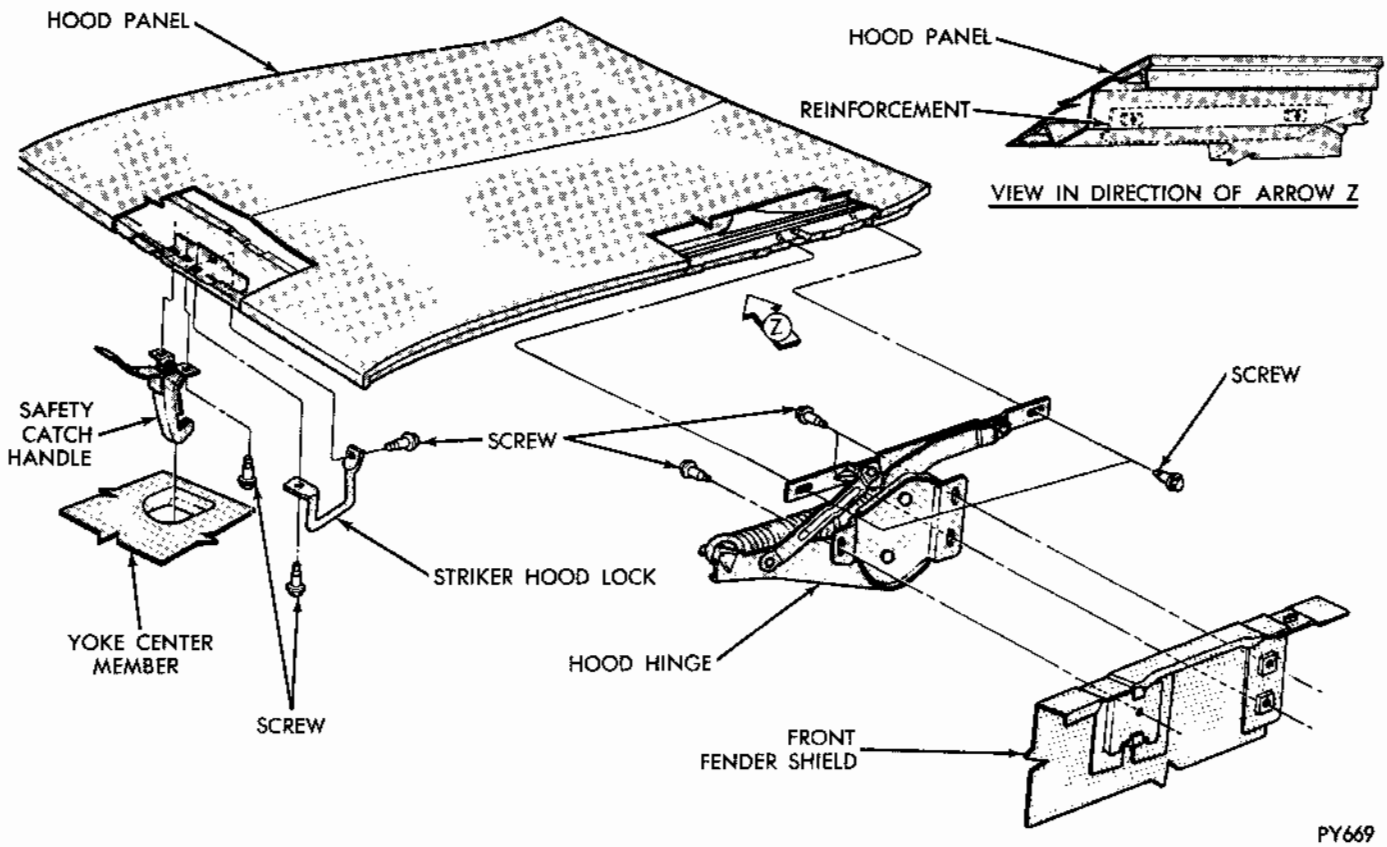

Fig. 7 - Hood Panel-Hinge and Latch Striker

MyMopar.com

been obtained. After making any adjustment that requires shifting of hood, always inspect hood striker and lock plate alignment. Adjust hood bumpers by raising them up or down as required.

FENDERS

ALIGNMENT

The fender should be adjusted to provide for equal spacing at the cowl, door front edge and door panel top edge. Alignment should be made at bottom of floor sill panel, front of hood and door outer panel upper edge.

REPLACEMENT

Removal

(1) Disconnect battery ground strap.

(2) Tape leading edge of front door and cowl to fender area to avoid damaging paint.

(3) Remove front bumper assembly.

(4) Disconnect head lamp wires and remove grille extension to fender nuts.

(5) Remove fender to cowl, floor sill, wheelhouse and radiator yoke nuts and screws (Fig. 9).

(6) Remove fender assembly and if necessary, mouldings, ornamentation and headlamp assemblies.

Installation

(1) Install head lamps, mouldings and ornamentation. Carefully position fender on studs at cowl side area and align fender with mounting holes in radiator yoke. Install all retainer screws and nuts.

(3) With fender correctly positioned, tighten screws and nuts securely.

(4) Connect head lamp wires and install grille to fender nuts. Connect battery ground strap.

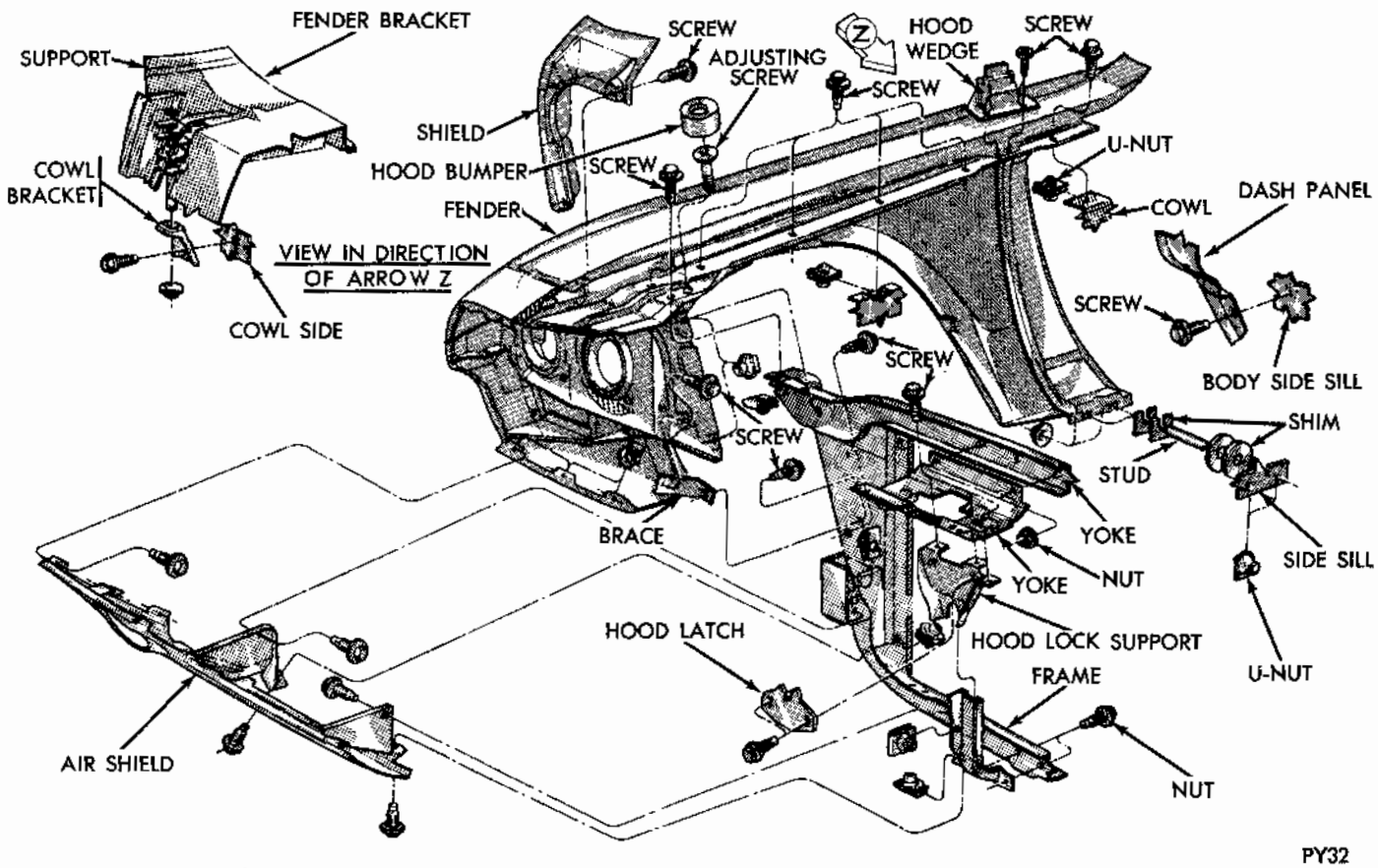

Fig. 9 - Fender Attachment

MyMopar.com

RADIATOR YOKE SUPPORT

REPLACEMENT

Removal

(1) Drain and remove radiator.
(2) Remove hood lock striker, horn and head lamp wiring from yoke support.
(3) From under fenders remove splash shield to yoke support screws.
(4) Remove support to frame screws and support.

Installation

(1) Position yoke support on frame and install screws finger tight.
(2) From under fenders, install splash shield to yoke support screws finger tight only.
(3) When all screws have been installed, tighten progressively.
(4) Attach horn and light wires to yoke support with plastic straps.
(5) Install radiator and hoses, fill cooling system and inspect for leaks

AIR SHEILD AND CROSS BAR

Refer to Figure 10 for air shield and cross bar attaching points.

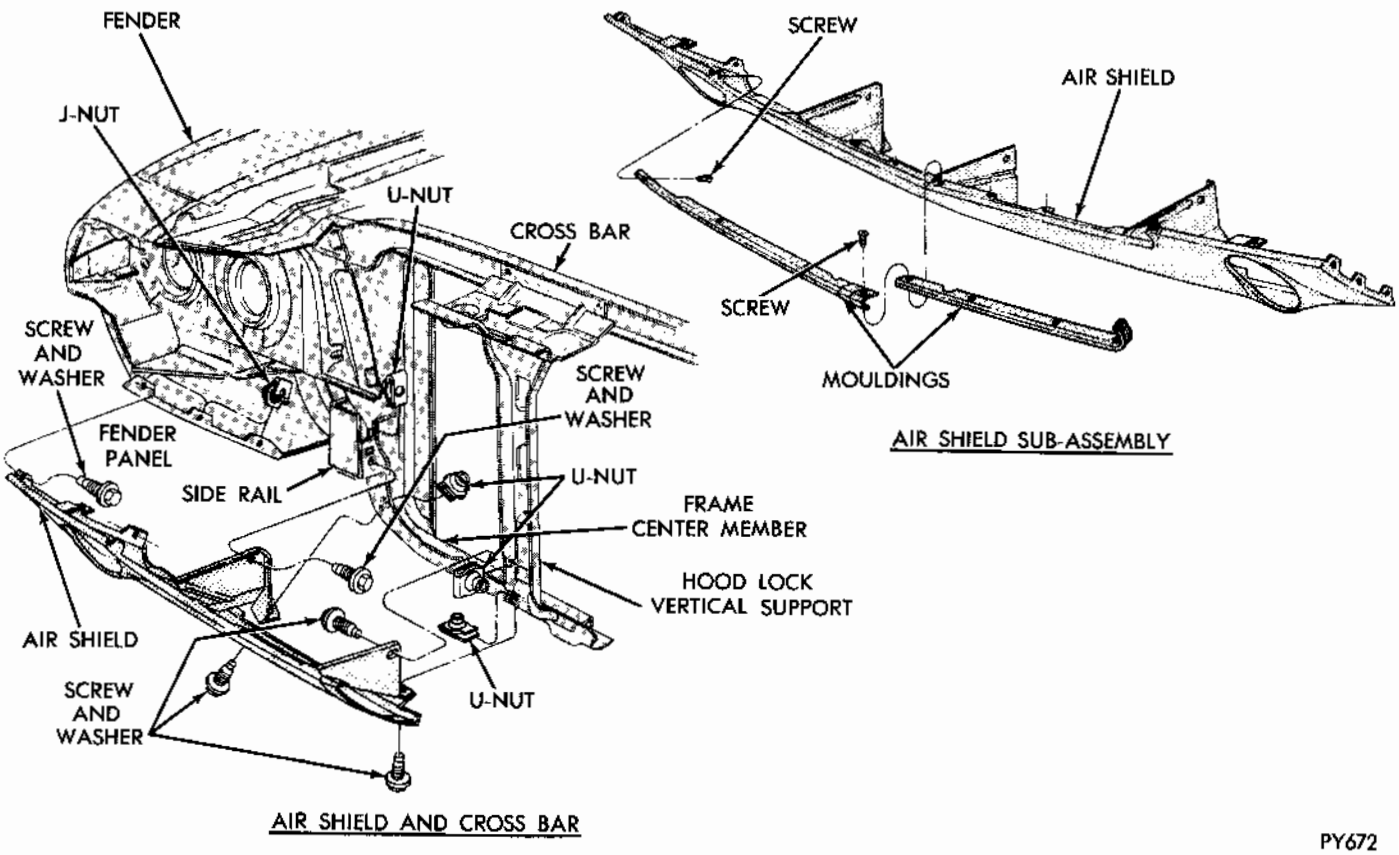

Fig. 10 - Air Shield and Crossbar

BUMPERS

FRONT AND REAR BUMPER

Refer to Figures 11 and 12 for front and rear bumper attaching points.

GRILLE

Refer to (Fig. 13) for installation of grille assembly to car. Care should be taken to protect textured grilles from high temperature during repairs.

MyMopar.com

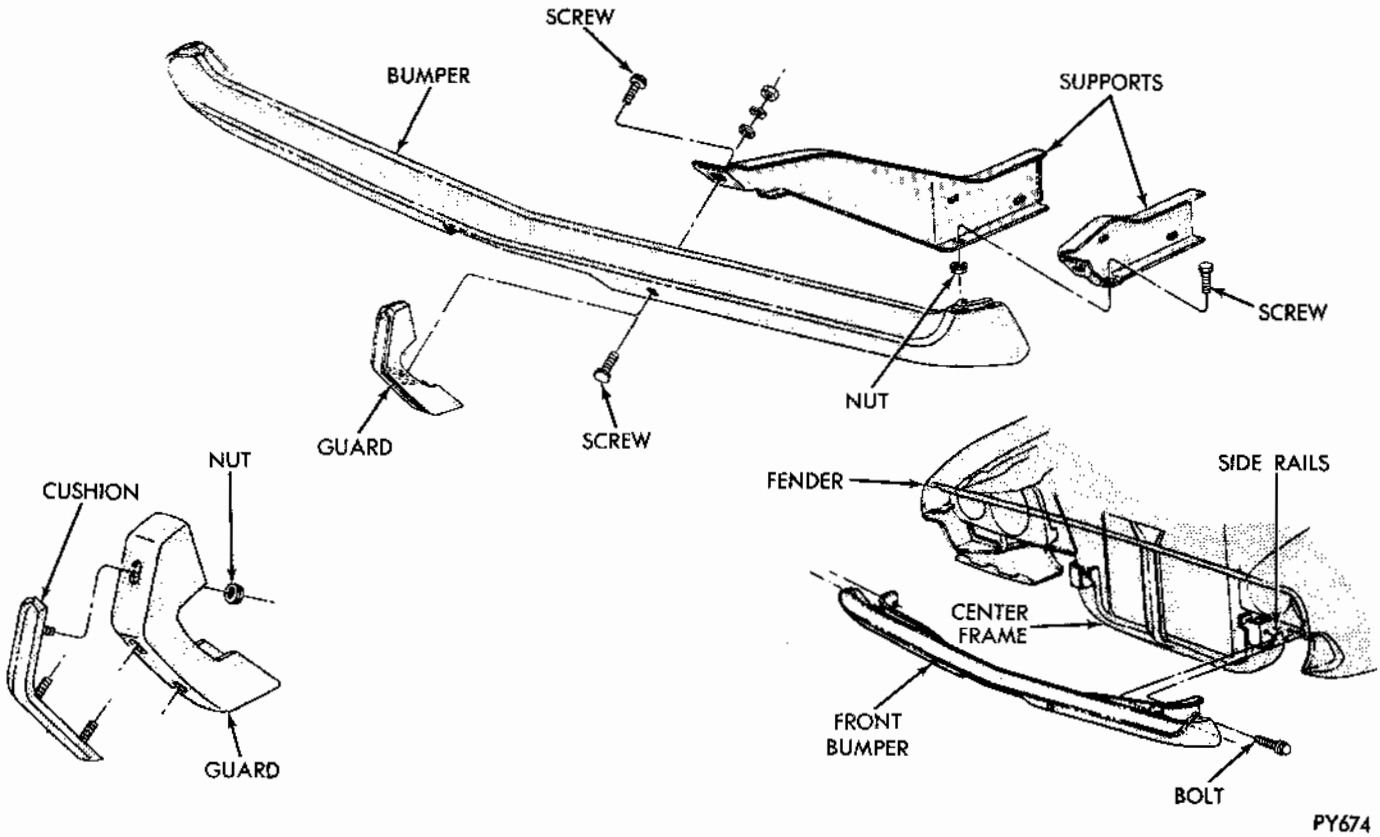

Fig. 11 - Front Bumper Application

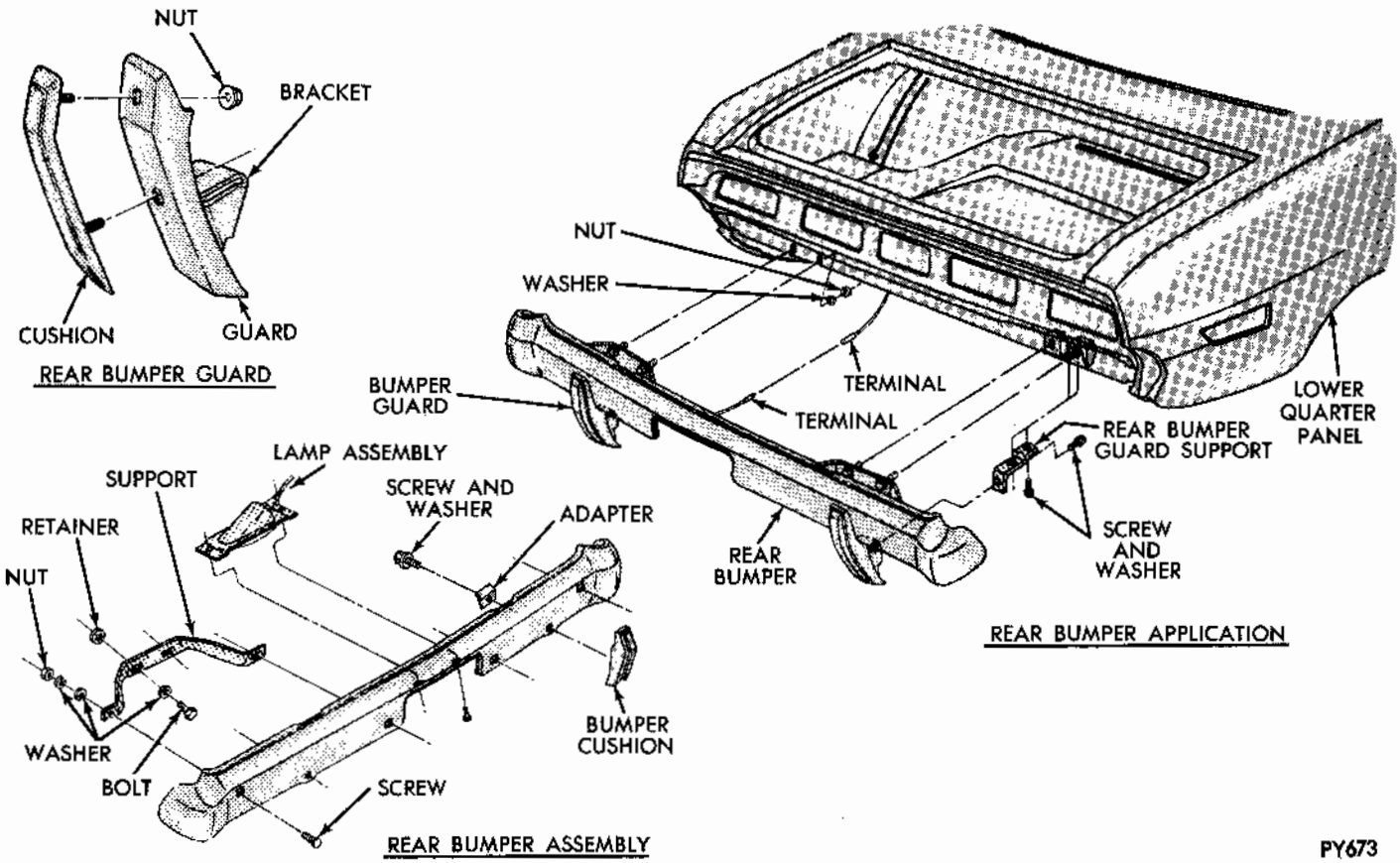

Fig. 12 - Rear Bumper Application

MyMopar.com

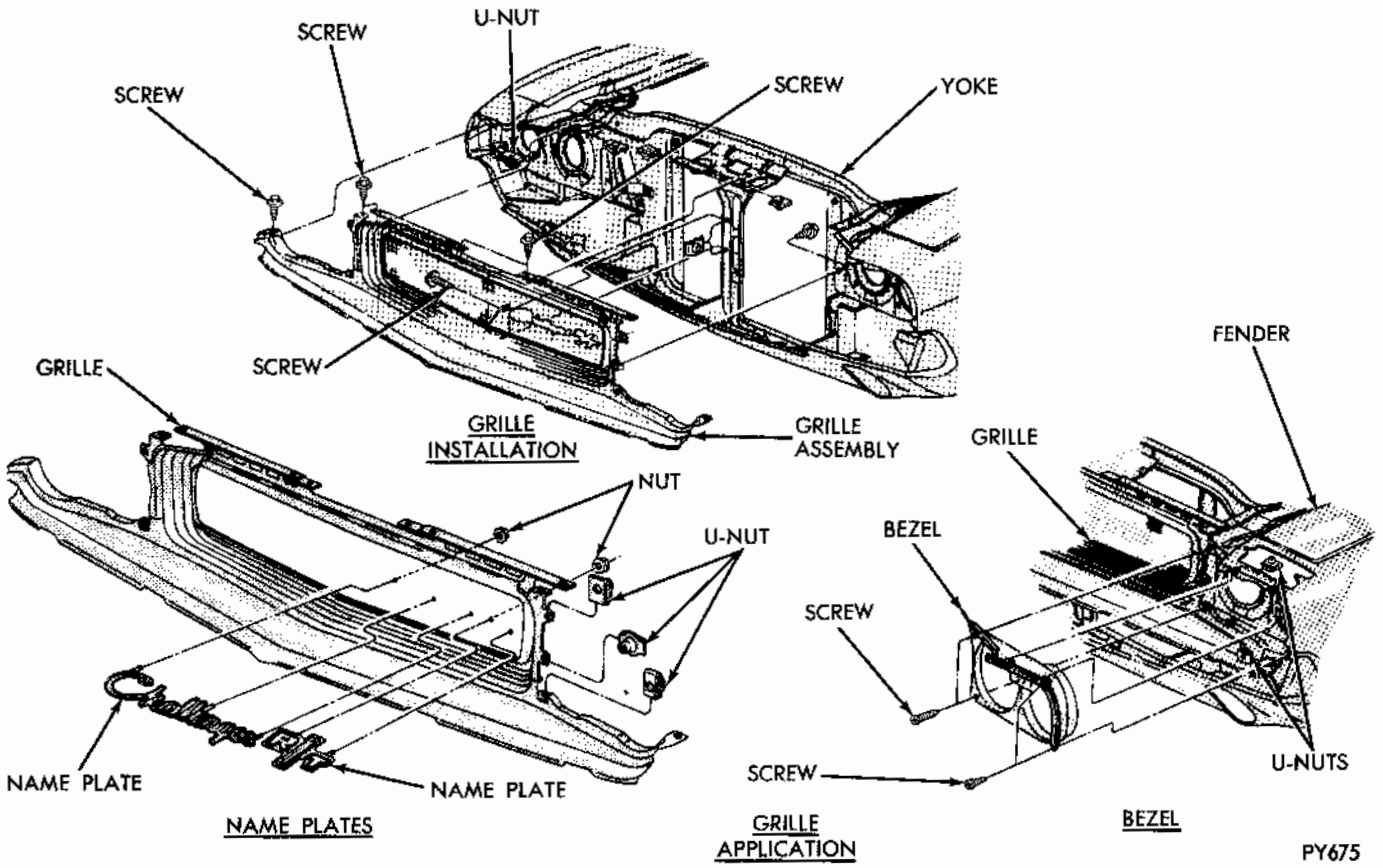

Fig. 13 - Grille Application

DOORS

The service procedures for internal door components do not include obvious operations, such as removing door or quarter panel trim panels, texting operation of window or inspecting glass fit after adjustments or replacement have been performed.

ALIGNMENT

Up and Down

Adjustment of the door can be made at either the pillar or door hinge halfs (Fig. 14).

Fore and Aft

Adjustment is made at the door hinge half. **Adjust only one hinge at a time.** Raising outer

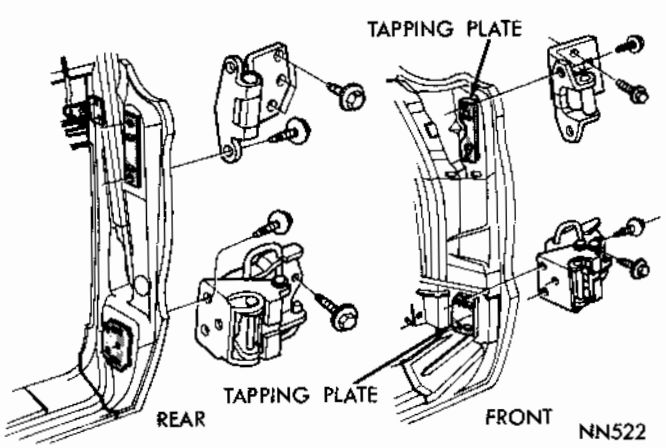

Fig. 14 - Door Hinges

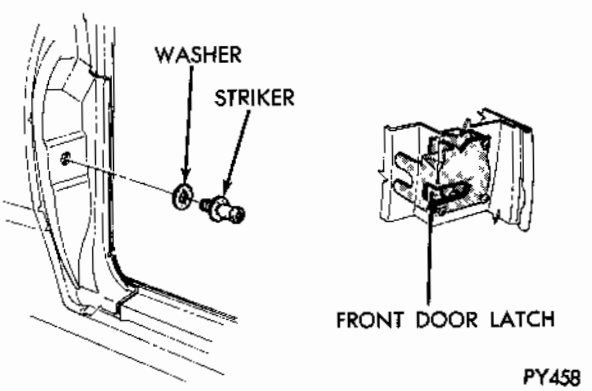

Fig. 15 - Door Latch Striker Adjustment

MyMopar.com

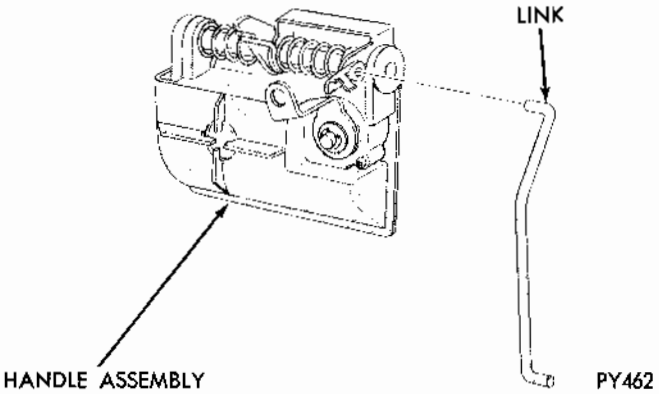

Fig. 16 - Latch Link

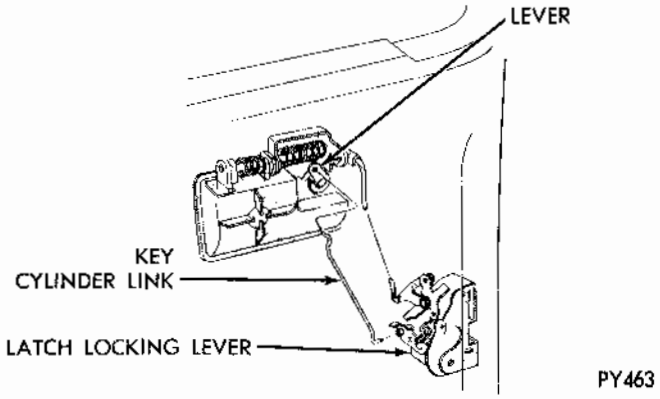

Fig. 17 - Door Lock Cylinder Linkage

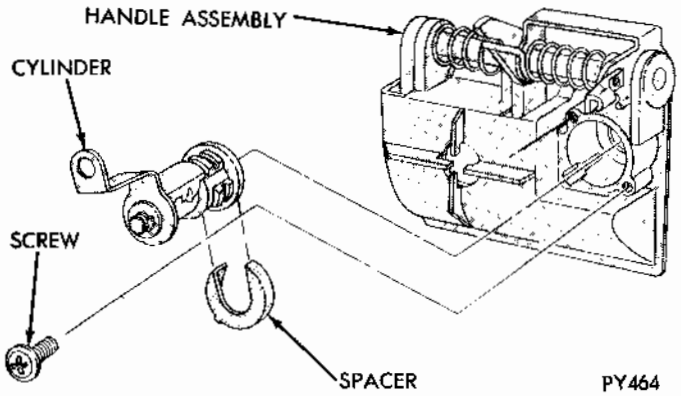

Fig. 18 - Lock Cylinder-Door Lock

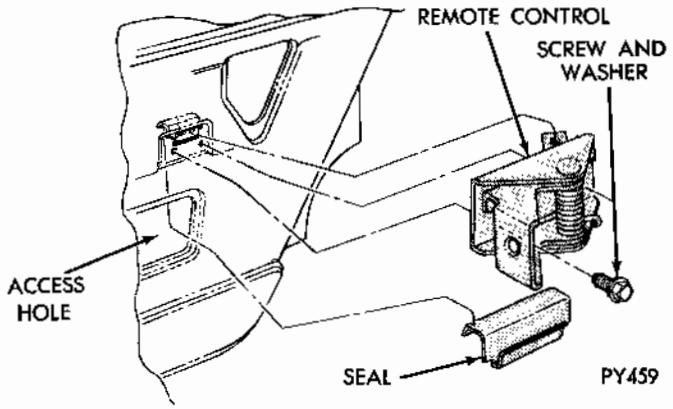

Fig. 19 - Remote Control

end of door moves upper part of door forward, when in closed position. Lowering the lower part of door moves lower part forward in closed position.

DOOR LATCH STRIKER ADJUSTMENT (Fig. 15)

(1) Open door and install fixture into latch opening located on panel door inside and secure.

(2) Close door, then open door and determine if washer is necessary for spacing.

(3) Install striker to door, install latch, then partially close door until striker lines up with latch.

DOOR AND LATCH ADJUSTMENTS

(1) Check all doors for contour and spacing, and all door lock strikers for proper relation to locks. Fit and readjust as follows:

(2) Open doors.

(3) Loosen door latch striker (Fig. 15).

(4) Loosen the necessary hinge bolts to suit each door as follows: (Fig. 14).

(a) For front door upper and lower hinge (body half) (forward most bolt).

(b) For front door upper and lower hinge (body half) (rear most bolt).

(c) For front door upper and lower hinge (door half) (2) upper and (3) lower bolts.

(5) Readjust and fit doors to door openings for alignment of contour lines and belt surfaces.

(6) Secure previously loosened hinge bolts (Fig. 14).

(7) Readjust door latch striker.

(8) Tighten and retorque striker to 40 to 60 foot-pounds (Fig. 15).

(9) Close doors.

LATCH LINK (Fig; 16)

Assemble link, front door latch (Fig. 16) to lever of handle assembly, (close clip).

DOOR LOCK CYLINDER LINKAGE (Fig. 17)

(1) Connect link front door latch key cylinder to lever portion of key cylinder.

(2) Insert lower end of link (Item $1) into latch locking lever retainer.

LOCK CYLINDER—DOOR LOCK (Fig. 18)

(1) Place handle assembly (front door outside) face down.

(2) Position cylinder assembly to handle assembly.

(3) Position spacer to cylinder and handle assembly.

(4) Secure cylinder with screws.

MyMopar.com

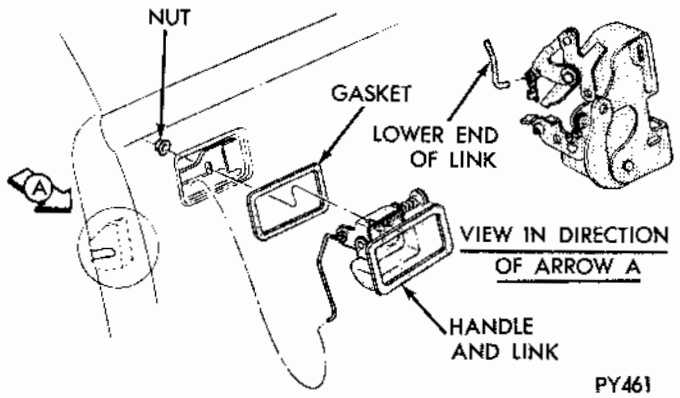

Fig. 20 - Outside Handle-Latch Link

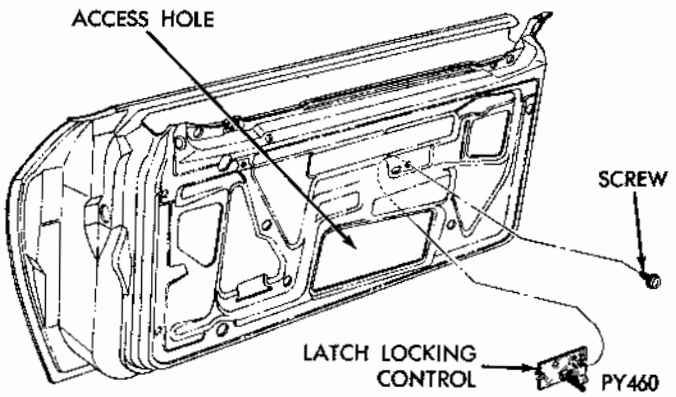

Fig. 21 - Front Door Latch Locking Control

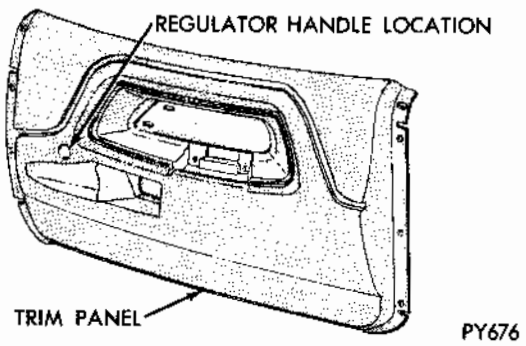

Fig. 22 - Door Trim Panel

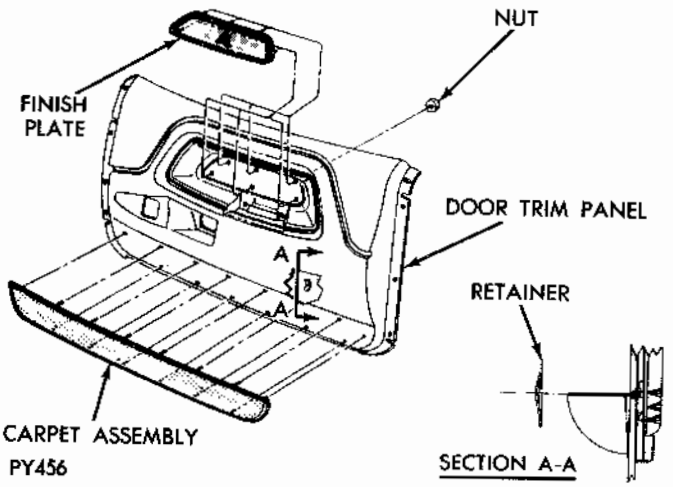

Fig. 23 - Carpet and Finish Plate To Door

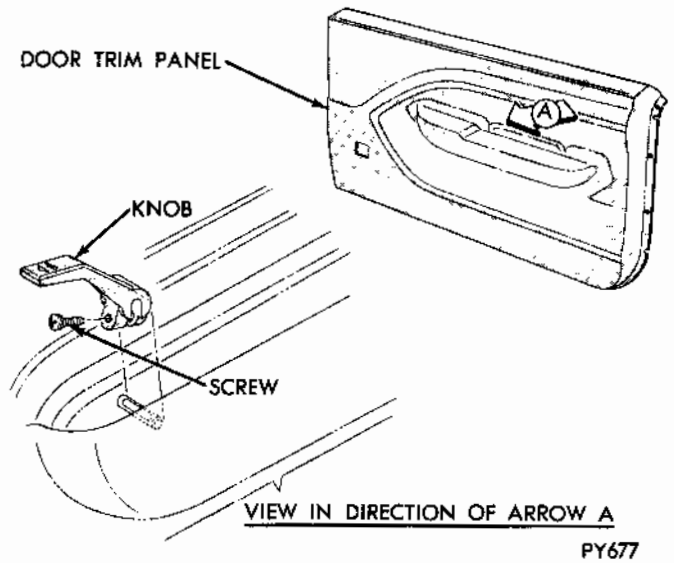

Fig. 24 - Door Locking Control Knob

REMOTE CONTROL (Fig. 19)

(1) Assemble seal—thru door panel access hole and position to remote control lever, press to secure.

(2) Position control assembly to attaching holes in door.

(3) Secure with screw and washer.

OUTSIDE HANDLE—LATCH LINK (Fig. 20)

(1) Assemble gasket to handle and link assembly.

(2) Position handle and gasket assembly to door outside panel.

(3) Secure with nut and washer.

(4) Insert lower end of link (part of handle assembly) into latch lever release and close clip.

FRONT DOOR LATCH LOCKING CONTROL (Fig. 21)

(1) Position front door latch to front door inside panel—thru access hole.

(2) Secure with screw and washer.

DOOR TRIM PANEL INSTALLATION (Fig. 20)

(1) Position and hook door trim panel to inner panel, align bottom of trim panel to fastener holes, tap in place.

(2) Secure each end with screws.

(3) Secure at arm rest with screws.

CARPET AND FINISH PLATE TO DOOR (Fig. 23)

(1) Place door trim panel on bench.

MyMopar.com

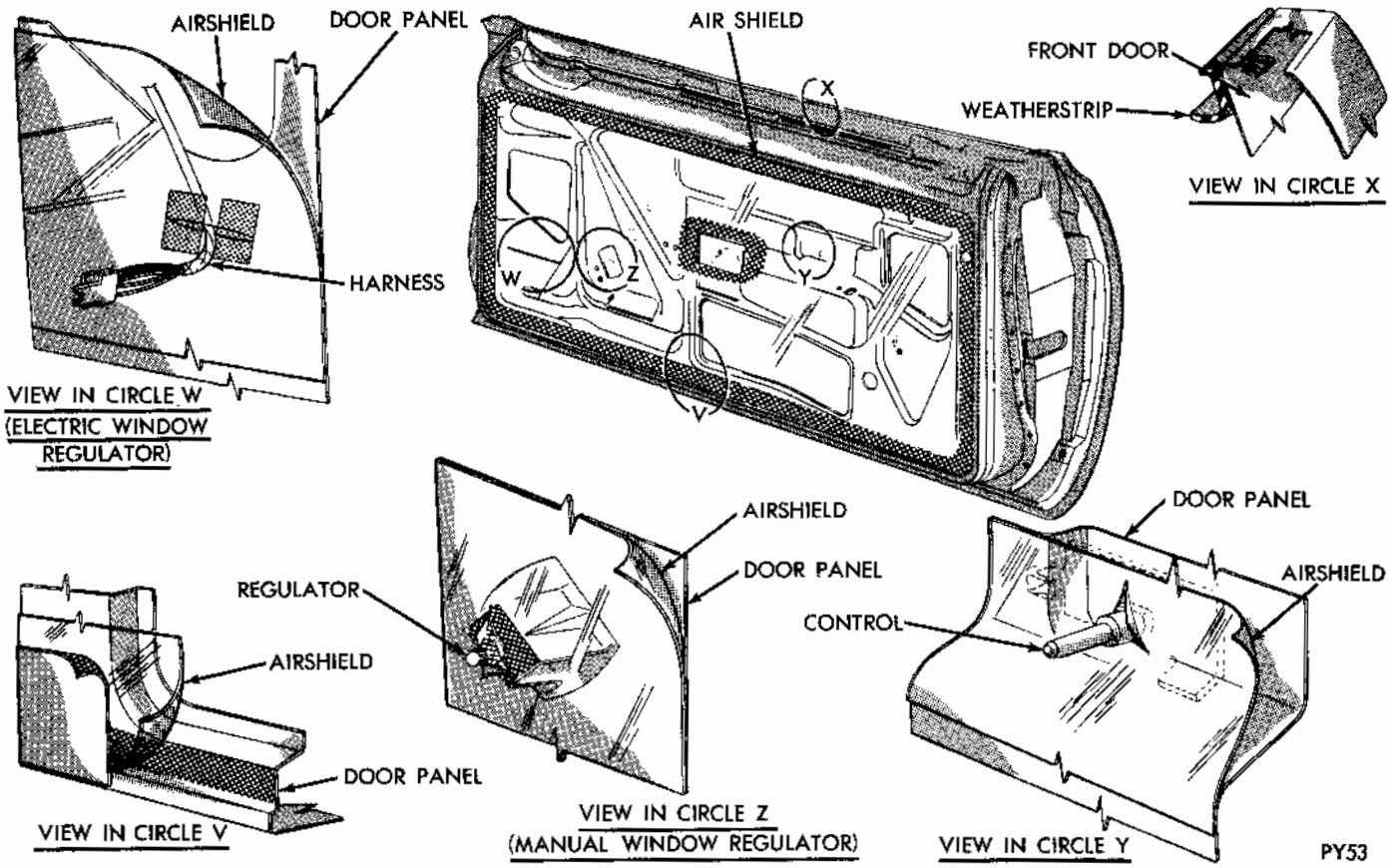

Fig. 25 - Door Air Shield

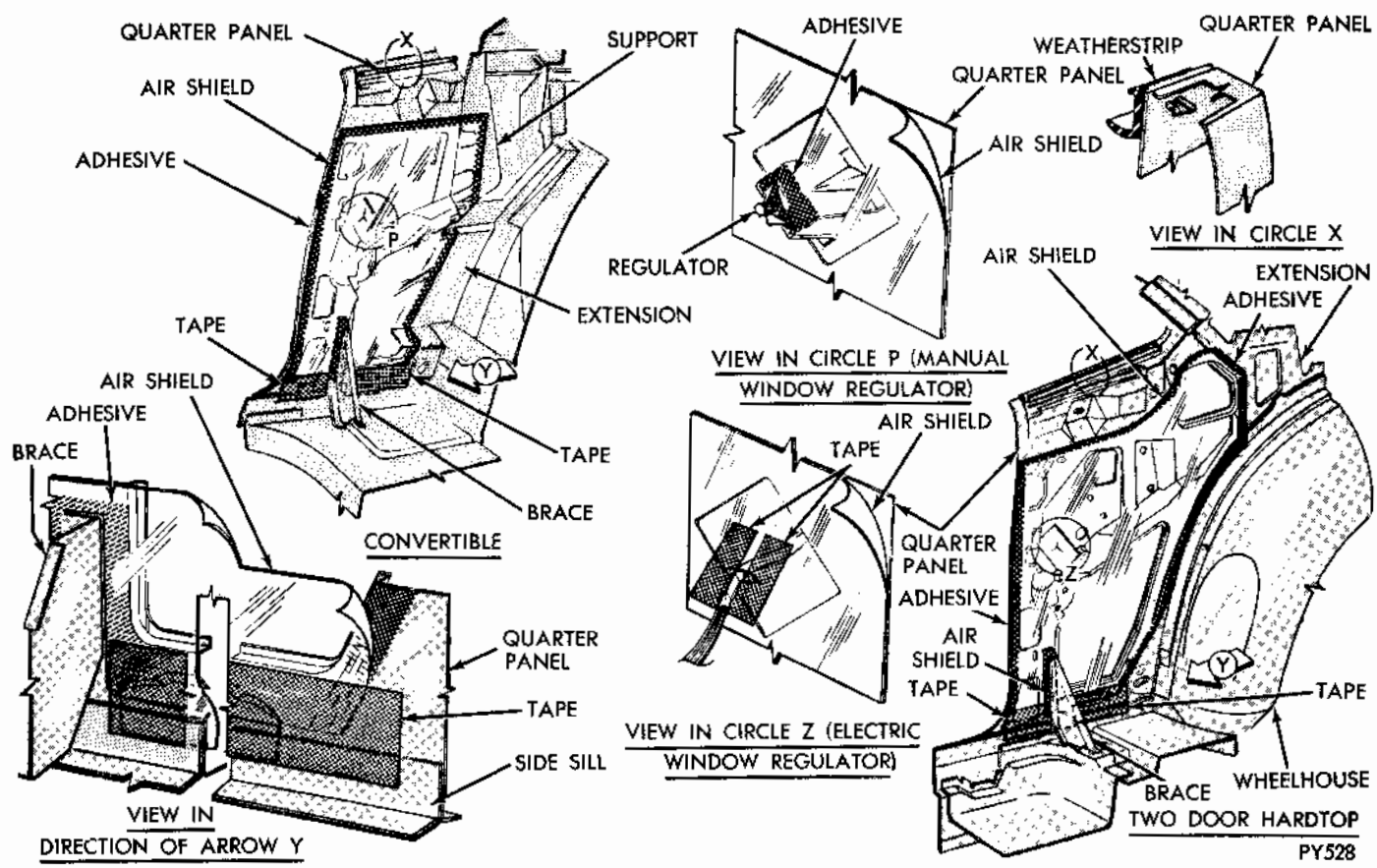

Fig. 26 - Quarter Panel Airshield

MyMopar.com

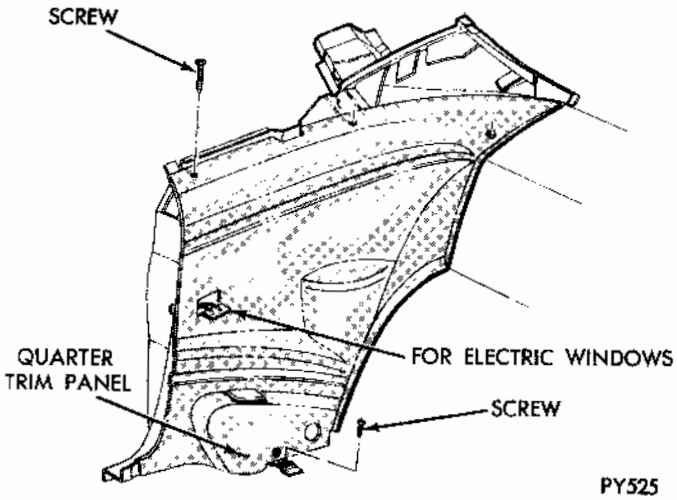

Fig. 27 - Quarter Trim Panel-Hardtop

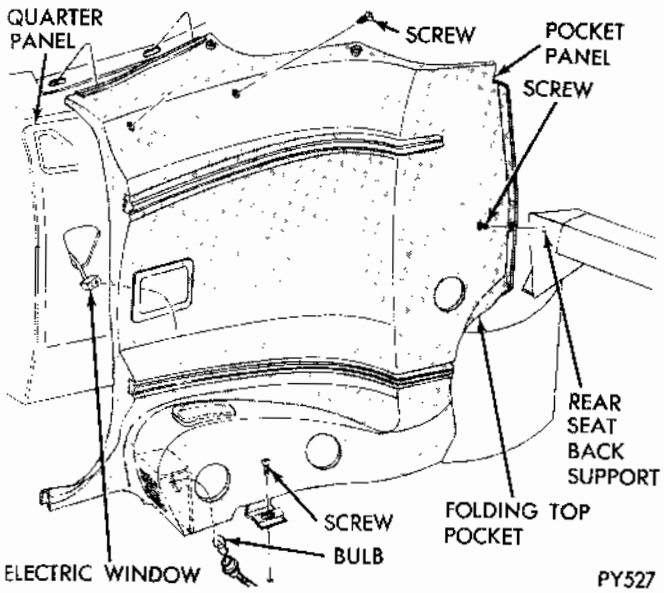

Fig. 29 - Pocket Panel Installation

(2) Loosely assemble carpet and base assembly to door trim panel.

(3) Secure base with nuts.

(4) Secure carpet assembly with retainers and bend over tabs.

DOOR LOCKING KNOB (Fig. 24)

Position knob to control assembly shaft and with knob in a unlocked position secure with screw and washer to front door latch locking control.

AIR SHIELD (Fig. 25)

Refer to (Fig. 25) for door air shield application.

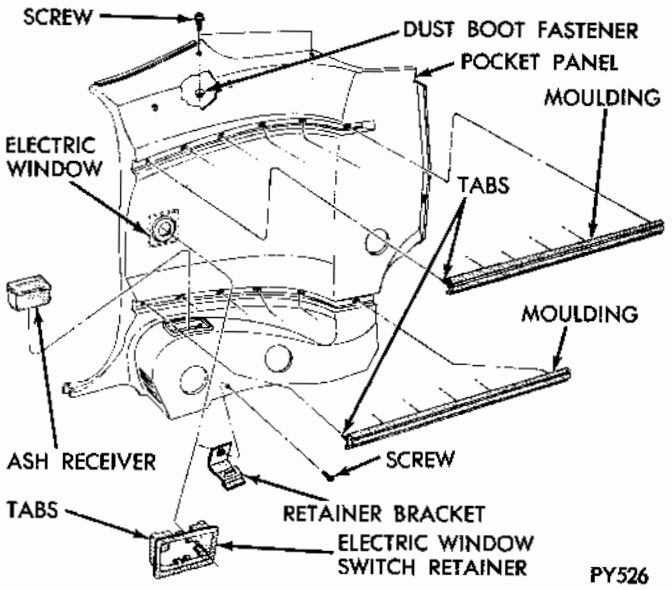

Fig. 28 - Pocket Panel Assembly-Convertible

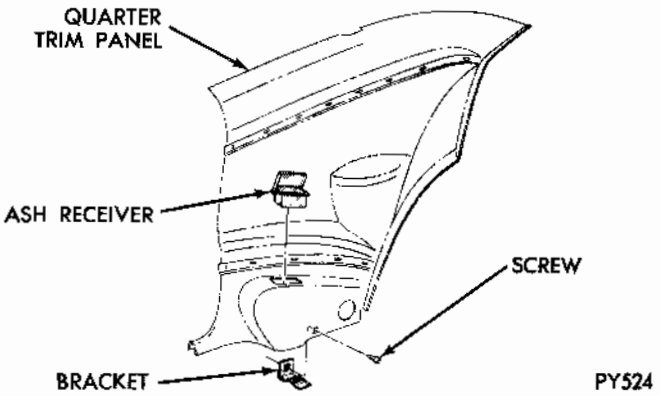

Fig. 30 - Ash Receiver To Panel

WEATHERSTRIPS AND WINDCORDS

Door Weatherstrips

Make sure all weatherstrip particles and cement are removed before installing new weatherstrip or windcords.

QUARTER PANEL AIRSHIELD (Fig. 26)

Installation

(1) Apply sealer adhesive to airshield.

(2) Install weatherstrip assembly to holes in quarter panel with clips.

(3) Apply weatherproof tape to weatherstrip, quarter panel, and side sill.

(4) Apply adhesive around window regulator in weatherstrip and immediately apply air shield.

QUARTER PANEL TRIM

QUARTER TRIM PANEL INSTALLATION (Fig. 27)

(1) Position quarter trim panel, align holes to quarter inner panel.

(2) Secure top with screws.

(3) Secure bottom to floor pan with screw.

For jobs with electric window lift, thread wire thru trim panel before positioning to inner panel.

FOLDING TOP POCKET PANEL ASSEMBLY (Fig. 28)

(1) Punch out opening for elctric window lift

MyMopar.com

switch retainer if applicable.

(2) Position panel assembly on bench.

(3) Position fastener stud dust boot into holes in pocket panel and secure with nut.

(4) Assemble moulding upper and lower to pocket panel.

(5) Bend tabs.

(6) Position and install retainer assembly—electric window lift switch and bend tabs.

(7) Assemble bracket to floor.

(8) Secure with screw and washer.

(9) Insert ash receiver into bezel and snap secure.

POCKET PANEL INSTALLATION (Fig. 29)

(1) Insert bulb into socket on existing wire assembly and turn to secure.

(2) Install panel into body and snap bulb and socket into rib of pocket panel.

(3) Route electric window lift wiring thru hole in pocket panel.

(4) Position and align pocket panel to quarter inside panel with front edge over lock pillar weld flange and secure to quarter inside panel with screw.

(5) Secure pocket panel to floor pan with screw.

(6) Assemble screw rear seat to panel.

ASH RECEIVER TO PANEL (Fig. 30)

(1) Place quarter trim panel on bench.

(2) Position bracket to trim panel, secure with screw.

(3) Position ash receiver to quarter trim panel and press in place.

STONE DEFLECTOR (Fig. 31)

(1) Assemble rear stone deflector J-nuts.

(2) Assemble the rear stone deflector with screw and washer and with nut and washer.

(3) Then tighten the nut and washer.

(4) Assemble reinforcement stone deflector to rear cross member, with screw and washer to rear cross member reinforcement.

(5) Tighten screw.

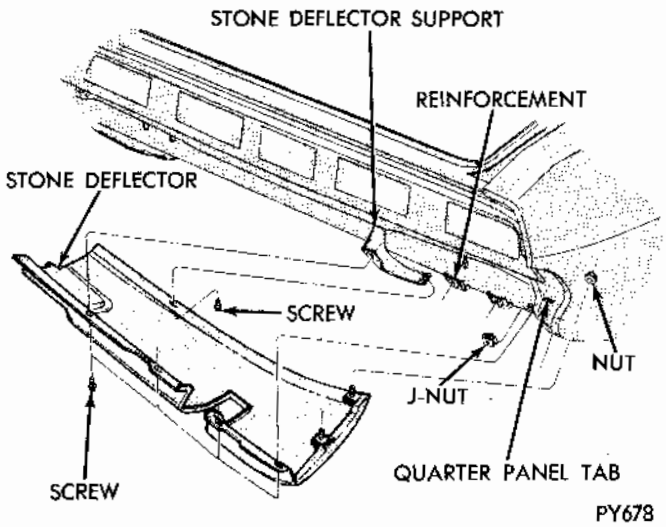

Fig. 31 - Stone Deflector Installation

DECK LID

Replacement

The deck lid is attached by two screws on each side. An assistant's aid is recommended when replacing, to prevent it sliding rearward and damaging the paint and also to aid in aligning of the hinge screw holes when installing.

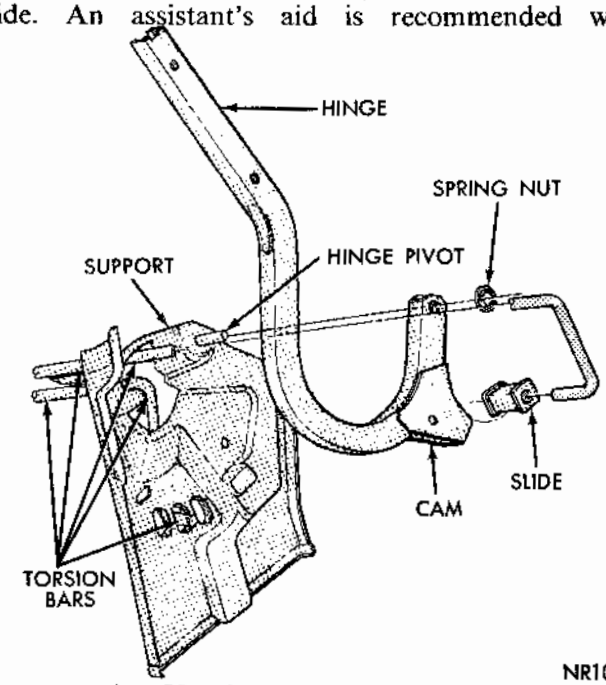

Fig. 32 - Deck Lid Hinge and Torsion Bar

Alignment

The deck lid hinges (Fig. 32) permit only slight adjustment at the hinge attaching points. The hinge brackets are welded in place and are not adjustable.

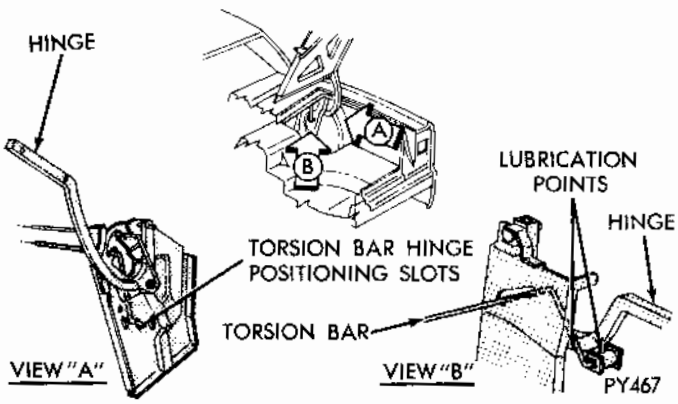

Fig. 33 - Deck Lid Torsion Bar Adjustment

MyMopar.com

Hinge Replacement

Removal

(1) Remove the deck lid.

(2) **Use care when disengaging a torsion bar as it is under a load.** Disengage torsion bar roller from hinge being removed.

(3) Remove spring nut retaining hinge to hinge bracket (Fig. 32) and remove hinge.

Installation

(1) Use a new spring nut and install hinge.

(2) Install deck lid and connect torsion bars.

(3) Test deck lid adjustment.

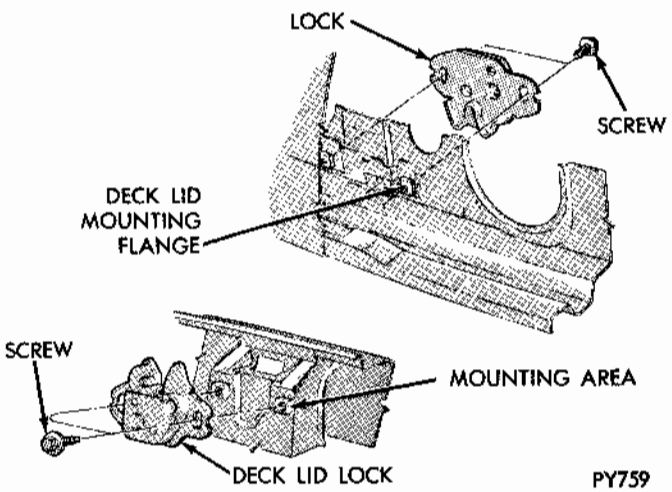

Fig. 34 - Deck Lid Lock Replacement

TORSION BAR REPLACEMENT

Removal

(1) Remove torsion bar (under spring load) from adjustable slot (Fig. 33).

(2) Unwind torsion bar and remove from support bracket.

(3) Push torsion bar out of roller in hinge arm and remove from hinge support.

Installation

(1) Insert bar into hinge support and position end of bar into hinge arm roller.

(2) Hook torsion bar into support bracket, and position end of bar into first adjusting slot.

(3) Move deck lid to various open positions and test tension of torsion bars.

(4) Adjust bars progressively until lid stays in open position.

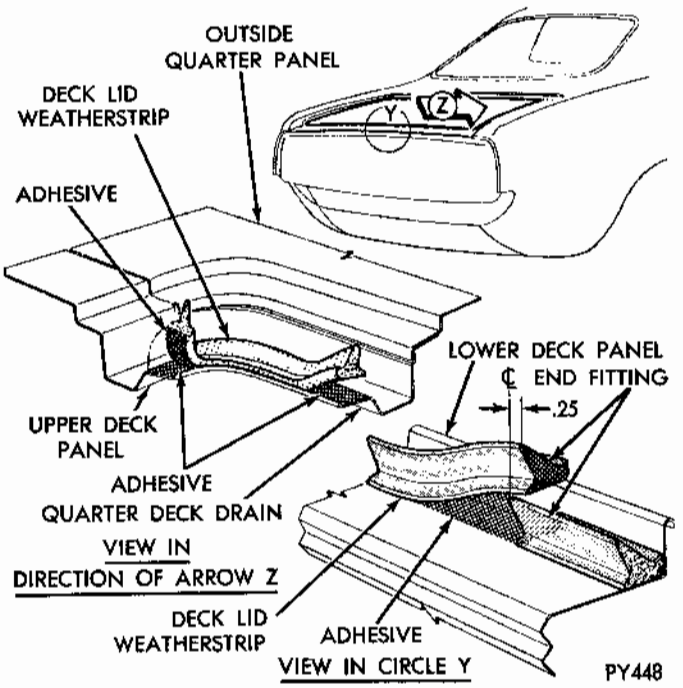

Fig. 35 - Deck Lid Weatherstrip

LOCK (Fig. 34)

The lock is mounted in the deck lid with screws (Fig. 34). Scribe the location of the lock on the mounting flange to aid in replacement.

DECK LID WEATHERSTRIP (Fig. 35)

(1) Apply a coat of adhesive to weatherstrip contact surfaces.

(2) Install weatherstrip so that joint will be located at bottom of deck lid opening. (Avoid puckering or stretching of weatherstrip around corners). Trim ends to overlap .25. Apply adhesive to butt surfaces and install under compression to provide a watertight joint.

SHEET METAL-DOORS

DART

INDEX

	Page
Outside Air Ducts	56
Without Heater	56
With Heater	56
Hood	57
Alignment	57
Replacement	57

MyMopar.com

Removal 57
Installation 58
Torsion Bar Replacement 58
Hinge Replacement 58
Fender's 59
Alignment 59
Replacement 59
Removal 59
Installation 59
Air Shield and Cross Bar 60
Bumper's 60
Attachment 60
Radiator Yoke Support 60
Replacement 60
Removal 60
Installation 60
Grille 61
Alignment and Replacement 61
Doors 61
Alignment 61
Up and Down 61
In and Out 61
Fore and Aft 61
Latch and Striker Pin 61
Door Replacement 62
Front Door Removal 62
Installation 62
Rear Door 62
Removal 62
Installation 62
Hinge Replacement 62
Inside Handles 62
Window Regulator Handle 62
Remote Control Handles 63
Arm Rests 63
Trim Panels 63
Lock Assembly 63
Remote Control 63
Removal 63
Installation 63
Lock Replacement 64
Removal 64
Installation 64
Lock Cylinder 64
Removal 64
Installation 64
Outside Handle-Front Door 64
Removal 64
Installation 64
Outside Handle-Rear Door 64
Removal 64
Installation 64
Weatherstrips and Windcords 65
Door Weatherstrips 65
Sedan Models 65
Roof Rail Weatherstrip 65
Outer Belt Weatherstrip 65
Deck Lid 66
Alignment 66
Replacement 66
Hinge Replacement 66
Removal 66
Installation 66
Torsion Bar Replacement 66
Removal 66
Installation 66
Lock Replacement 66
Lock Adjustment 66
Lock Cylinder 66
Weatherstrip 66

OUTSIDE AIR DUCTS (Fig. 1)

Vehicles equipped with a heater include the right side duct in the heater housing. Vehicles without a heater have a separate duct assembly for the right side. The left side duct assembly is the same for all models.

Without Heater

The fresh air duct assemblies are attached to the plenum opening. The right duct is retained by two hook type rods positioned over the plenum opening flange and held to brackets on the base of the duct with screws (Fig. 1).

The left duct assembly is attached directly to the plenum by positioning the duct over the plenum weld studs and securing with nuts.

With Heater

The right duct, part of the heater housing is attached to the plenum with a single hook type rod positioned over the plenum flange and secured to the duct base with a screw (Fig. 1).

MyMopar.com

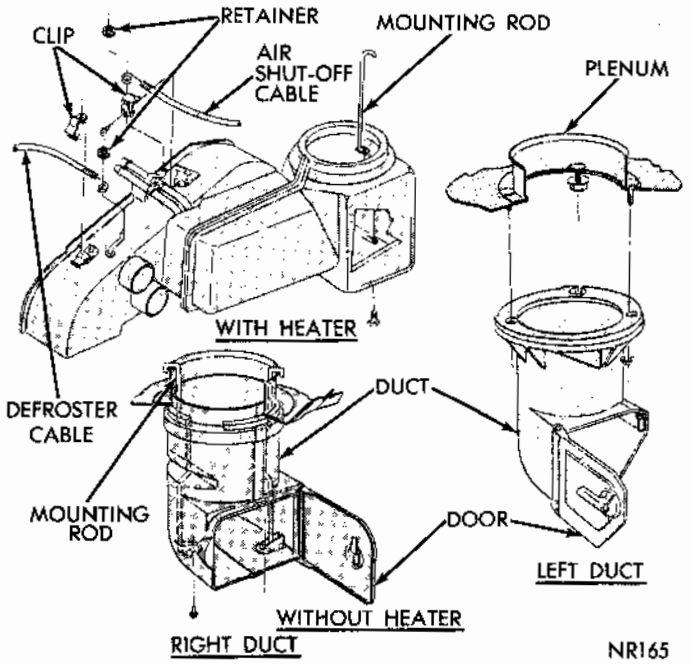

Fig. 1-Outside Air Vents

HOOD

ALIGNMENT

Prior to making any hood adjustment, inspect clearances and alignment of hood sides in relation to cowl, fenders and grille. The cowl adjustment must be made first.

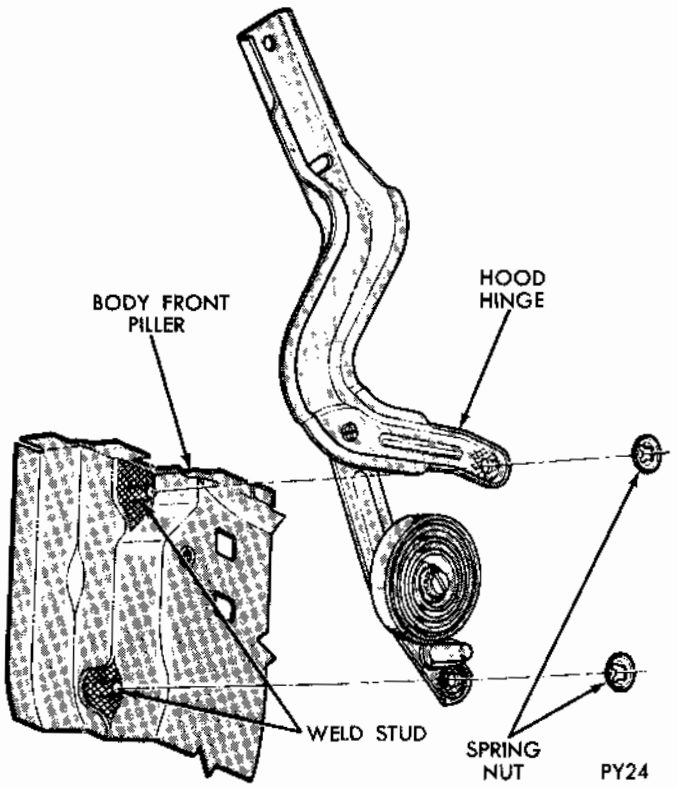

Fig. 2 - Hood Adjustment

REPLACEMENT

Removal

(1) Place a protective covering over cowl and fender area.

(2) Mark outline of hinges on hood to aid in installation.

(3) With an assistant, remove hinge-to-hood bolts (Fig. 2) and remove hood assembly. **Use extreme care not to permit hood to slide rearward and damage painted surfaces of the cowl and fender areas.**

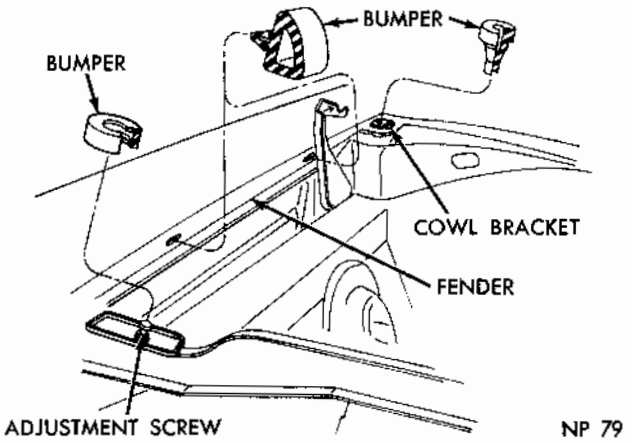

Fig. 3 - Hood Leveling Adjustment

MyMopar.com

Installation

(1) With an assistant, position hood on hinges and install hinge to hood bolts. Do not tighten.

(2) Align scribe markings on hood with hinge and tighten screws lightly.

(3) Close hood and inspect alignment.

(4) Adjust alignment (Figs. 2 and 3) as necessary and tighten hood to hinge bolts 180 inch-pounds.

(5) Remove protective covering from cowl and fender area.

To adjust the latch (Fig. 4) loosen the attaching screws and raise or lower until the correct adjustment has been obtained. After making any adjustment that requires a shifting of the hood, always inspect the hood striker and the lock plate assembly for alignment.

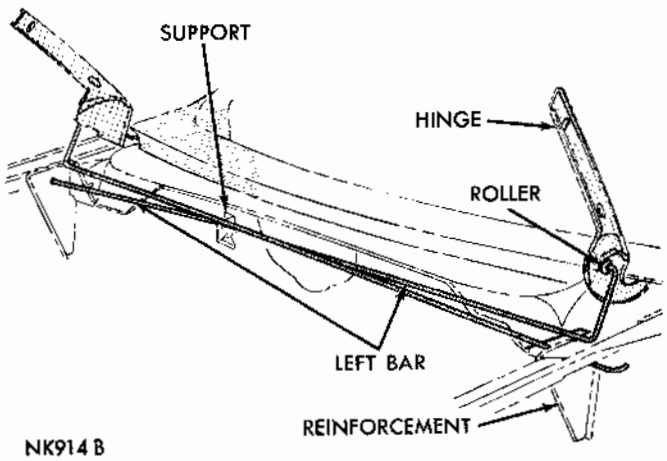

Fig. 5 - Hood Torsion Bars

TORSION BAR REPLACEMENT

(1) Disengage the torsion bar roller (Fig. 5) from its seat on hood hinge by forcing the roller end of bar to the rear and raising hood fully.

(2) Disengage left hand torsion bar roller from hood hinge.

(3) Remove hood assembly.

(4) Remove torsion bars from center support and remove bars from end reinforcements.

(5) Lubricate torsion bar rollers and install on hinges.

(6) Install hood assembly and adjust alignment.

HINGE REPLACEMENT

(1) Disengage torsion bar roller from hood hinge.

(2) Scribe hinge location on hood and remove hinge to hood screws.

(3) Support hood at hinge area.

(4) Remove hinge stud spring nuts from studs (Fig. 2) and remove hinge.

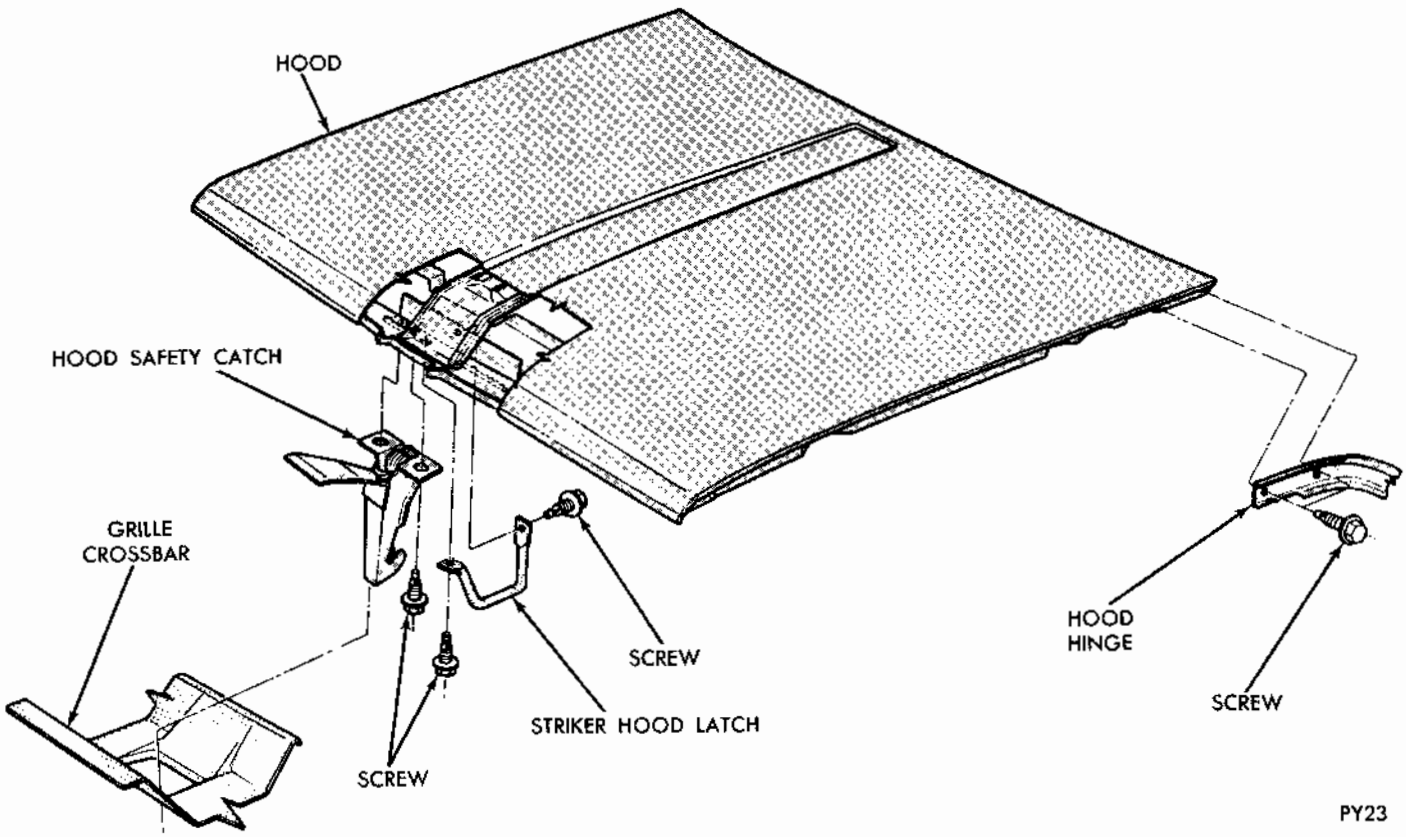

Fig. 4 - Hood Latch and Release Handles

MyMopar.com

(5) Lubricate hinge stud areas with lubriplate and position hinge on studs.

(6) Using a socket with putty placed on end, position a new spring nut on putty and position on stud. Press spring nuts on studs using a screw driver.

(7) Remove hood support and position hinge on hood.

(8) Install hinge to hood screws and tighten to 180 inch-pounds after alignment has been accomplished.

(9) Engage torsion bar roller with hood hinge.

FENDERS

ALIGNMENT

The fender should be adjusted to provide for equal spacing at the cowl, door front edge and door panel top edge. Alignment should be made at bottom of floor sill panel, front of hood and door outer panel upper edge.

REPLACEMENT

Removal

(1) Disconnect battery ground strap.

(2) Tape leading edge of front door and cowl to fender area to avoid damaging paint.

(3) Remove front bumper assembly.

(4) Disconnect head lamp wires and remove nuts attaching grille extension to fender.

(5) Remove nuts and screws attaching fender to cowl, floor sill, wheelhouse or splash shields and radiator yoke (Fig. 6).

(6) Remove fender assembly and if necessary remove fender mouldings, ornamentation and head light assemblies.

Installation

(1) Install head lamps, mouldings and ornamentation if removed.

(2) Carefully position fender on studs at cowl side area and align fender with mounting holes in radiator yoke. Install all mounting screws and retainer nuts.

(3) With fender correctly positioned, tighten all screws and nuts securely making certain fender is aligned at cowl and hood areas.

(4) Connect head lamp wires and install grille to fender nuts. Connect the battery ground strap.

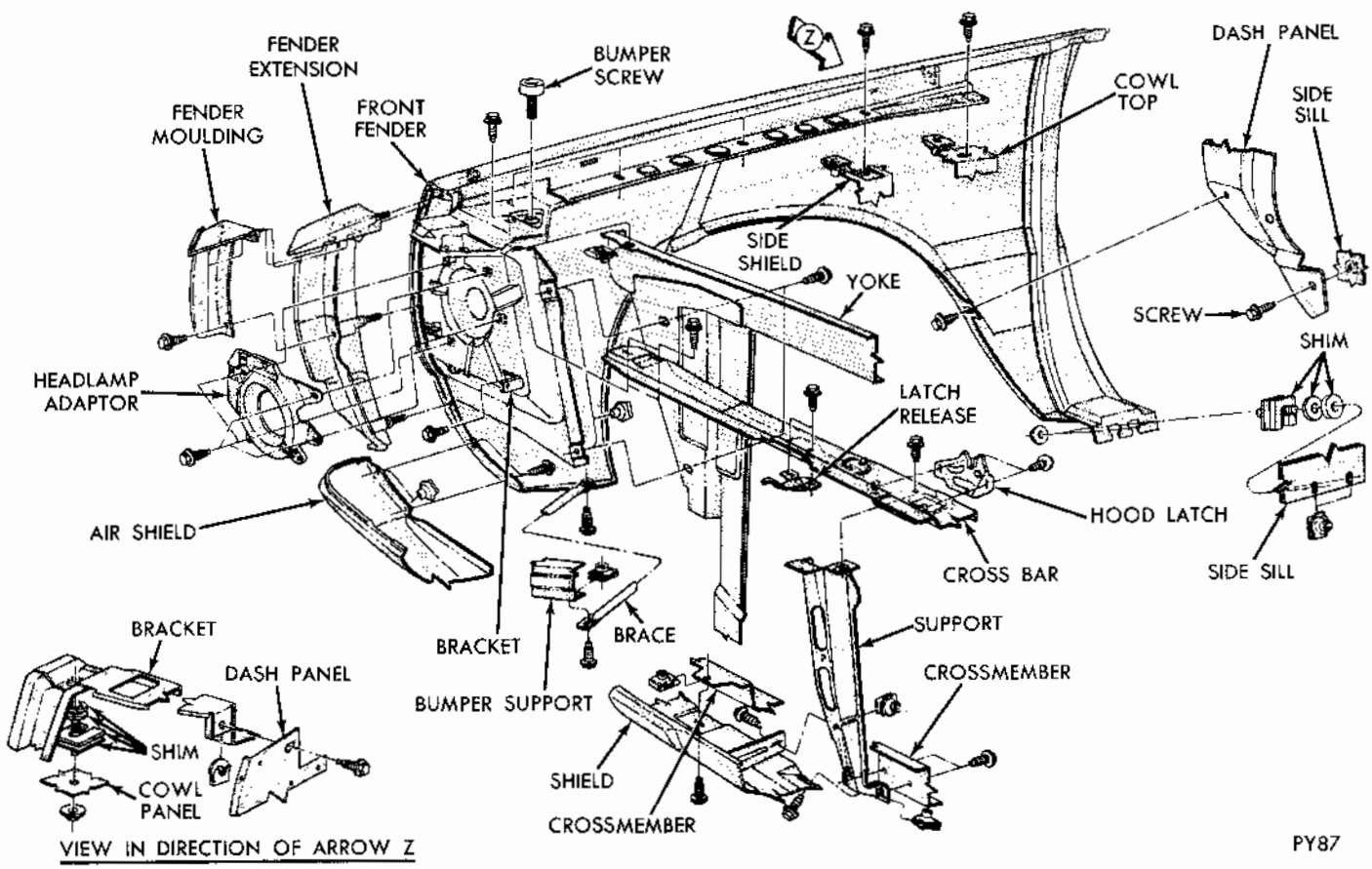

Fig. 6 - Fender Attachment

MyMopar.com

AIR SHIELD AND CROSS BAR

Refer to (Fig. 7) for air shield and cross bar attaching points.

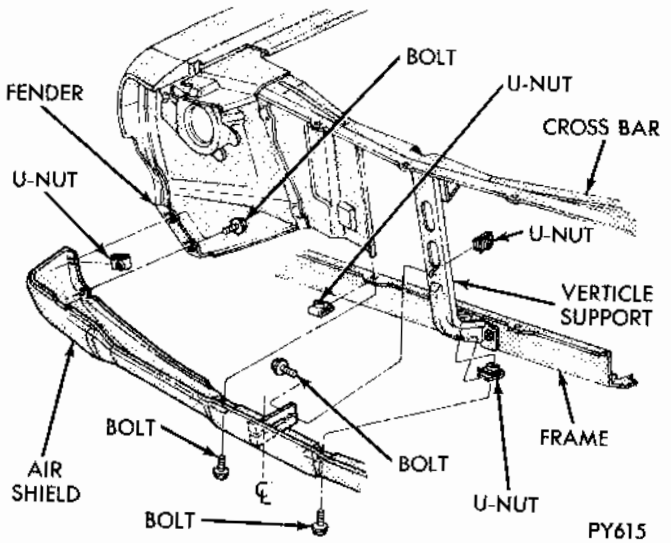

Fig. 7 - Air Shield and Cross Bar

BUMPERS

ATTACHMENT

Refer to (Figs. 8 and 9) for bumper attaching points.

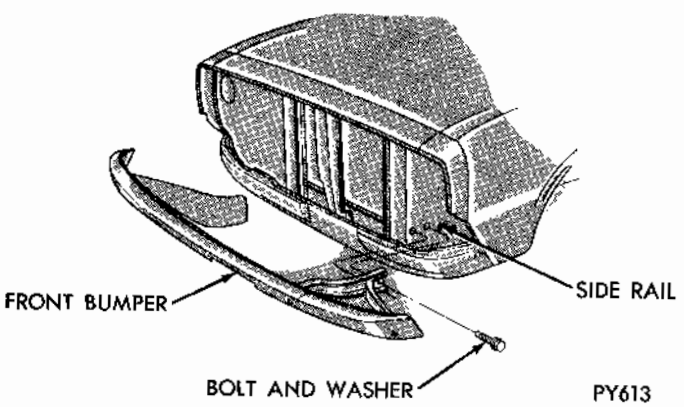

Fig. 8 - Front Bumber Application

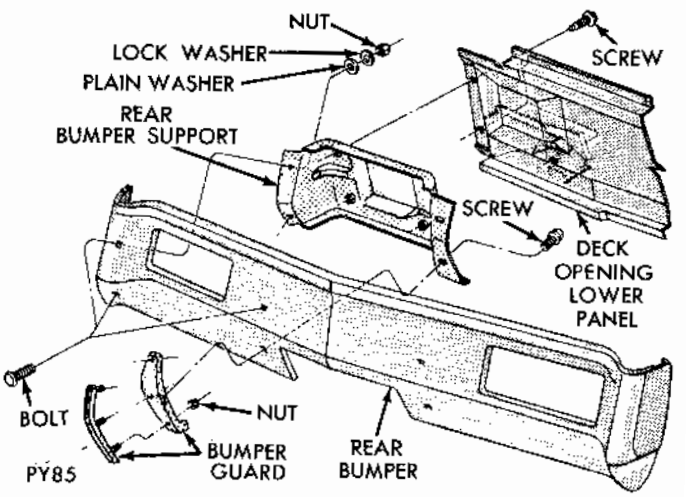

Fig. 9 - Rear Bumper Application

RADIATOR YOKE SUPPORT

REPLACEMENT

Removal

(1) Drain radiator and remove hoses from radiator.

(2) Remove radiator attaching screws and radiator.

(3) Remove hood lock striker bar, horn and headlamp wiring from yoke support.

(4) From under the fenders remove the wheelhouse to yoke support attaching screws.

(5) Remove support to frame attaching screws and remove radiator yoke support from engine compartment.

Installation

(1) Position yoke support into the engine compartment. Install the frame to core support screws finger tight.

(2) From under the fenders, install splash shield to yoke support screws finger tight only.

(3) When all attaching screws have been installed, tighten progressively.

(4) Attach the horn and lamp wires to the yoke support with the plastic straps.

(5) Install radiator, hoses, fill cooling system and inspect for leaks.

MyMopar.com

GRILLE

ALIGNMENT AND REPLACEMENT

Refer to (Fig. 10) for grille attaching points. Align grille to frame opening. The grille must be held against the front face of the fenders at the outer edges to avoid stressing or fracturing. Caution should be used in protecting textured grilles from high temperature during repairs.

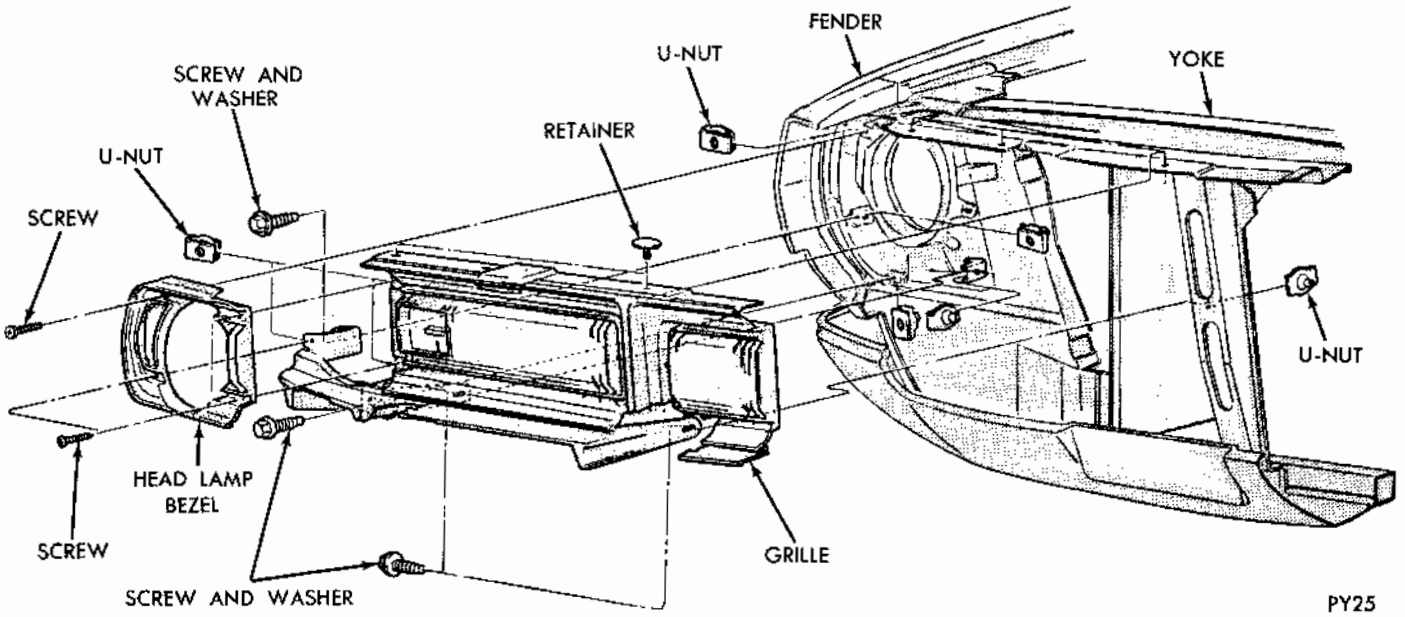

Fig. 10 - Grille Assembly

DOORS

The service procedures for internal door components do not include obvious operations, such as removing door or quarter panel trim panels, testing operation of windows or inspecting glass fit after adjustments or replacement have been performed.

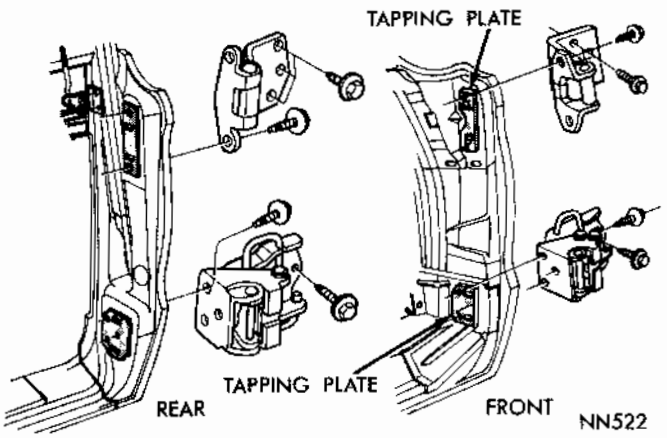

Fig. 11 - Door Hinge Attachment

ALIGNMENT

Up and Down

Adjustment of the door can be made at either the pillar or door hinge halfs (Fig. 11).

In and Out

Adjustment is made at the door hinge half. **Adjust only one hinge at a time.** Raising outer end of door moves upper part of door forward, when in closed position. Lowering lower part of door moves lower part forward, when in closed position.

Fore and Aft

Adjustment is made at the pillar hinge half. **Adjust only one hinge at a time.** Raising outer end of door, moves upper part of door into door opening. Lowering outer end of door, moves lower part of door into door opening.

LATCH AND STRIKER PIN

The silent type door latch (Fig. 12) features a

MyMopar.com

rubber isolation of the round striker pin on the door frame and those surfaces acting as stops inside the latch. The latch assembly is built into a sheet metal pocket on the door face. The striker pin is attached by a single screw which also allows for adjusting.

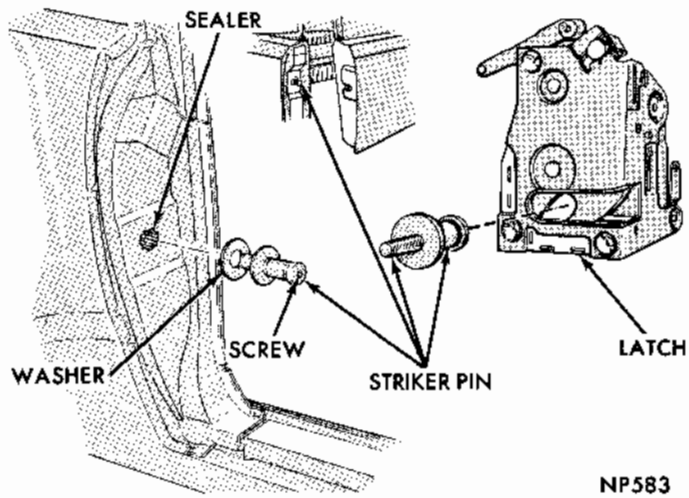

Fig. 12 - Latch and Striker Pin

DOOR REPLACEMENT

FRONT DOOR (ALL MODELS)

Removal

(1) With door in wide open position, place a jack, with a block of wood or pad on lifting plate of jack, as near hinge as possible. (This will hold weight of door as hinge bolts are loosened.)

(2) Remove door interior trim and hardware.

(3) Scribe a line around upper and lower hinge plates on door panel.

(4) Remove hinge attaching screws from door and remove door for further disassembly if necessary.

Installation

(1) With door inner hardware installed, place door in position in door opening, supported by a padded jack.

(2) Locate door hinge plates on door panel and install hinge attaching screws finger tight only.

(3) Adjust jack to align hinge plate scribe marks and tighten attaching screws.

(4) Complete door aligning procedure, and install door interior trim and hardware.

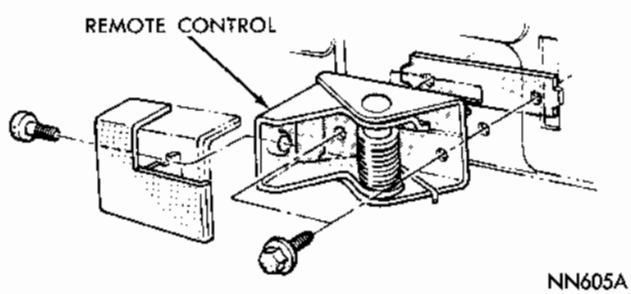

Fig. 13 - Remote Control Handle

REAR DOOR (All Models)

Removal

(1) Open rear door and place a padded jack under door near the hinges.

(2) Remove door interior trim and hardware.

(3) Scribe aligning marks around hinge plates on door frame.

(4) Remove hinge attaching screws from door and remove door from body.

Installation

(1) With rear door inner hardware installed, support door on a padded jack and position door on hinges.

(2) Install attaching bolts finger tight.

(3) Align hinges with scribe marks.

(4) Tighten attaching screws and test door for alignment.

(5) Install door interior trim and hardware.

HINGE REPLACEMENT

The door hinges (Fig. 11) are attached to the doors by screws accessible from outside. The front door hinges are each attached to the "A" post by three screws.

The rear door upper hinges are attached to the "B" post by three screws accessible through an access hole in the "B" post.

INSIDE HANDLES

Window Regulator Handle

The window regulator handles are retained on the shaft with an Allen set screw. The handles should be positioned on the shaft approximately in

MyMopar.com

a horizontal position with the knobs facing rearward.

Remote Control Handle

The remote control handle (Fig. 13) is attached to the control unit with a screw at the rear inner end.

ARM RESTS

The arm rests are retained by two metal screws inserted at the bottom of the arm rest base. The pad and base can be separated and if necessary, the pad may be recovered.

TRIM PANELS

Replacement

(1) Remove inside handles and arm rests.

(2) Remove screws attaching trim panel to door inner panel.

(3) Insert a wide blade screw driver between trim panel and door frame next to retaining clips and snap retaining clips out of door panel. Remove trim panel.

(4) Before installing door trim panel, inspect condition of watershield.

(5) Be certain the escutcheon spring is placed on the regulator shafts.

(6) Align trim panel retaining clips with holes of door frame and bump into place with heel of hand.

(7) Install trim panel to door screws.

(8) Install escutcheon washer, handles and arm rest.

LOCK ASSEMBLY

REMOTE CONTROL (MANUAL)

Removal

(1) Raise door glass.

(2) Remove screws attaching remote control base to door panel (Figs. 13 and 14).

(3) Remove link from remote control lever.

(4) Remove control through large opening in door.

Installation

(1) When installing the remote control assembly, coat parts with lubriplate.

(2) Install assembly through door opening and connect link to the control lever.

(3) Install attaching screw and test operation of control.

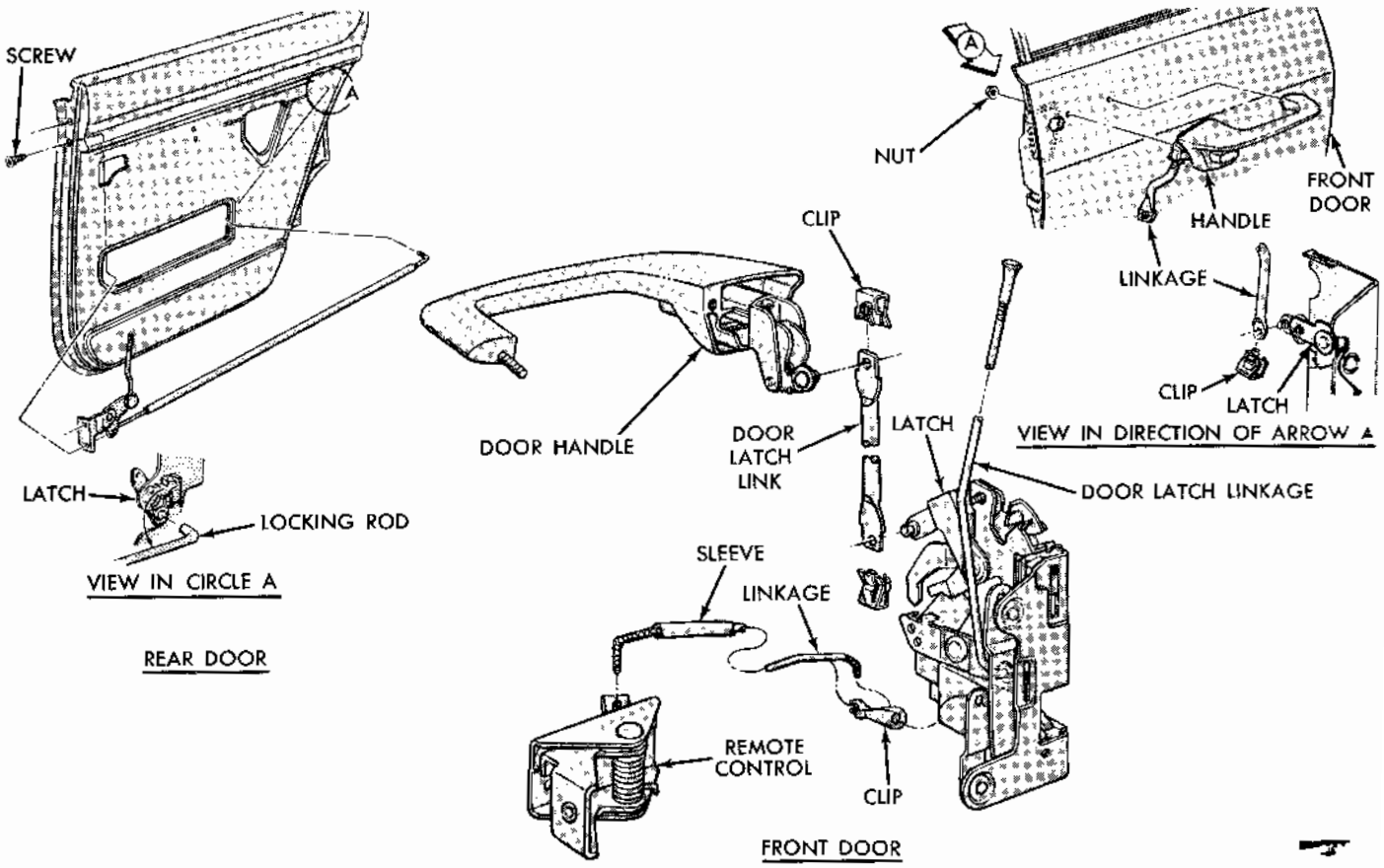

Fig. 14 - Front and Rear Door Locking Mechanism

MyMopar.com

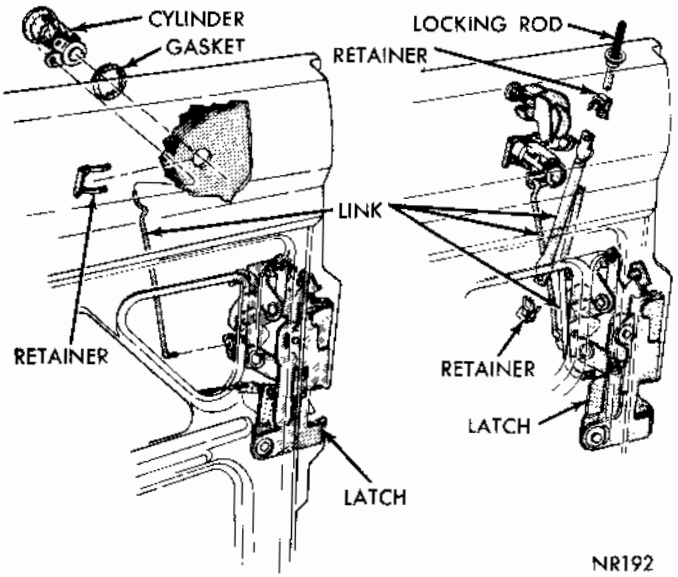

Fig. 15 - Door Lock Cylinder

LOCK REPLACEMENT

Removal

(1) Disconnect handle to lock link (Fig. 14) from lock by pulling link outward at lock.

(2) Disconnect locking lever rod (front door only) from lock assembly.

(3) Disconnect locking rod link from lock.

(4) Remove screws attaching lock assembly to door.

(5) Rotate lock assembly and disconnect remote control link when removing lock.

(6) Lubricate all moving points of lock assembly.

Installation

(1) Position lock assembly in door and connect remote control link to lock lever.

(2) Install lock retaining screws.

(3) Connect handle to lock link.

(4) Connect locking lever rod (front door only) to lock assembly.

(5) Connect locking lever rod and remote control link to lock.

LOCK CYLINDER

Removal

(1) With window in the up position, disconnect cylinder link (Fig. 15) from clip on lock lever **(4 door only)** and from cylinder.

(2) On **2 door models** disconnect lock link from clip on lock lever, remove link control bracket mounting screws and remove cylinder link from cylinder.

(3) Remove retainer from cylinder body and cylinder from door.

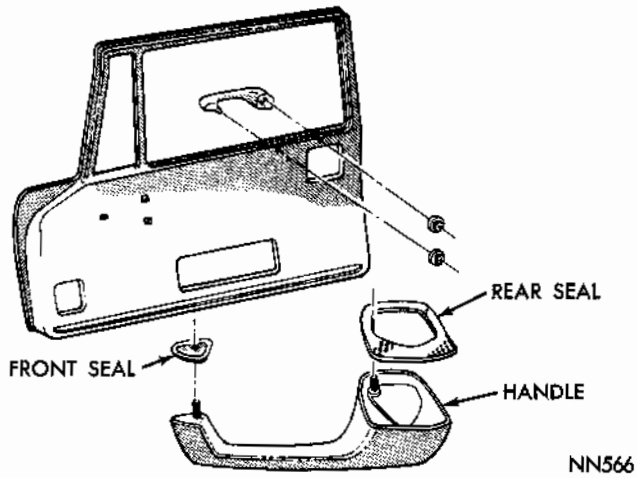

Fig. 16 - Front Door Handle

Installation

(1) Position cylinder in door and install retainer on cylinder body.

(2) Connect the cylinder link to cylinder arm and to clip on lock lever **(4 door models).**

(3) On **2 door models** connect cylinder link to cylinder, position link bracket on door face and install attaching screws. Connect lock link to lock.

OUTSIDE HANDLE—FRONT DOOR

Removal

(1) With door glass in up position, remove door handle attaching nuts from mounting studs (Fig. 16) and link from handle to lock.

(2) Lift handle up and remove from door.

Installation

(1) Install handle into door opening. Engage link from handle to lock.

(2) Attach retaining nuts and test operation of the handle.

OUTSIDE HANDLE—REAR DOOR

Removal

(1) With door open and glass in up position remove retainer from link at handle connector.

(2) Depress outside handle release button and remove link from handle connector.

(3) Remove nuts attaching handle to door and remove handle.

Installation

(1) Position handle in door and install mounting nuts.

(2) Depress handle button and position link over connector on handle.

(3) Install retainer over link and connector.

MyMopar.com

WEATHERSTRIPS AND WINDCORDS

Door Weatherstrips

Make sure all old weatherstrip particles and cement are removed before installing new weatherstrip.

Sedan Models

(1) Apply lower half of weatherstrip, starting at hinge face at belt line, working fasteners into holes in shut face of doors.

(2) Apply a 1/8 inch bead of cement to weatherstrip seating area on door upper and lower areas.

(3) Install upper half of weatherstrip on door, indexing at the upper corners.

(4) Work weatherstrip from index points to a point midway between them. **Avoid puckering or stretching of weatherstrip.**

ALL MODELS (EXCEPT SEDAN)

(1) Apply a coat of cement to weatherstrip contact area on vent wing, door inner and outer panels at belt line and to contact surface of weatherstrip.

(2) Position pillar seal on weatherstrip, making sure lip of weatherstrip dove tails into groove of seal and install screws.

(3) Install weatherstrip on door, indexing at top of door at belt line with two fasteners.

ROOF RAIL WEATHERSTRIP

Refer to Figure 17 for the attaching points and methods of cementing.

The weatherstrip retainers are adjustable through the use of elongated attaching holes. The weatherstrip can be moved in or out for the best possible fit and seal along the top edge of the vent frame, door glass and quarter glass.

The glass up-stop must be adjusted so the fully raised glass just curls the outer lip of weatherstrip against the inner lip.

When the up-stop, roof rail weatherstrip and glass are properly adjusted, the outer lip of weatherstrip will seal along the top edge of the glass and the inner lip of weatherstrip will seal along the upper inside edge of glass.

OUTER BELT WEATHERSTRIP

The door outer belt weatherstrips are retained in the door panel with spring type retainers.

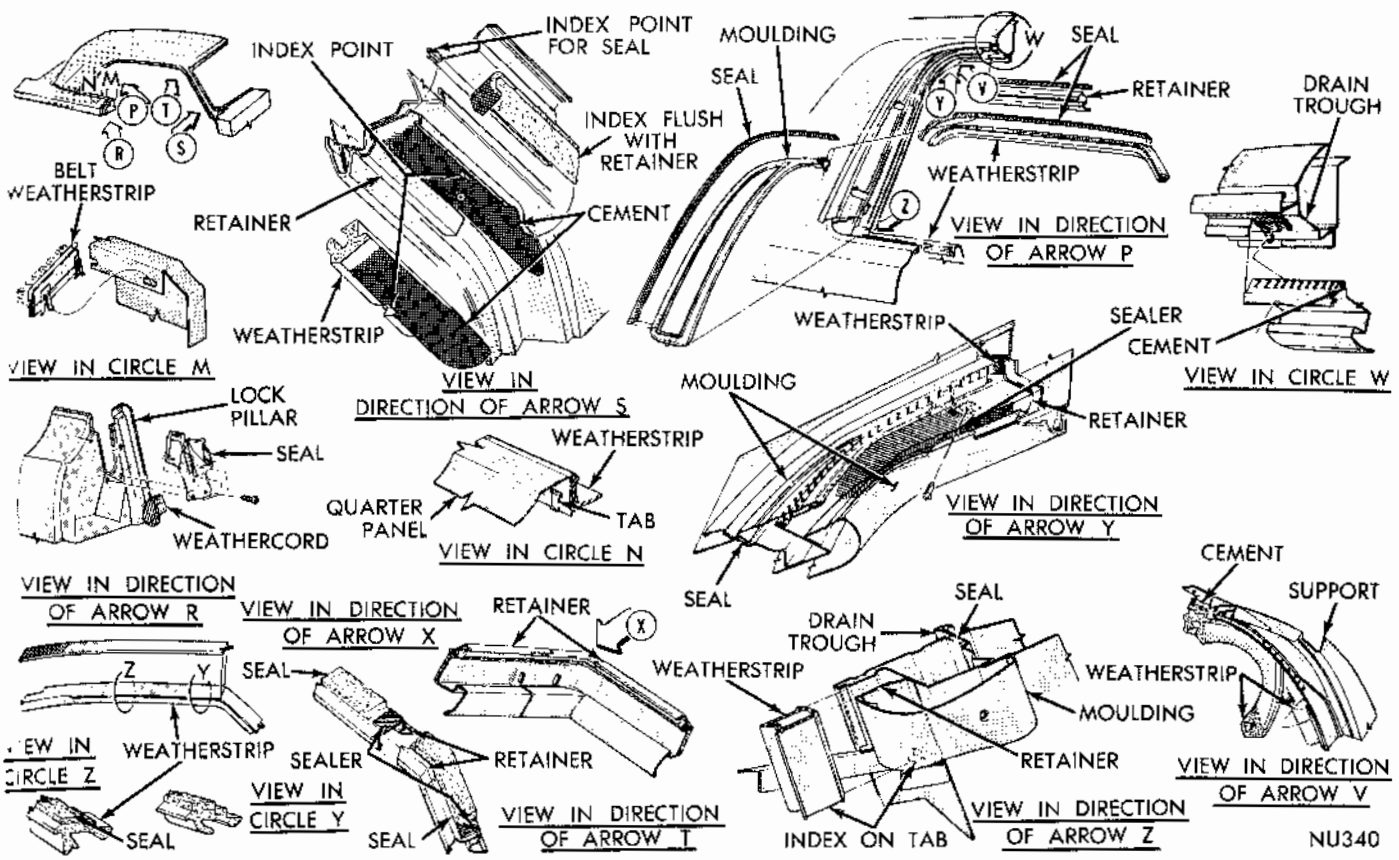

Fig. 17 - Roof Rail Weatherstrip

MyMopar.com

DECK LID

Alignment

The deck lid hinges (Fig. 18) permit only a very slight adjustment at the deck lid to hinge attaching points.

Replacement

The deck lid is attached to the hinges by two screws on each side. An assistant's aid is recommended when replacing the deck lid to prevent it from sliding rearward and damaging the paint and also to aid in the aligning of the hinge screw holes when it is installed.

HINGE REPLACEMENT

Removal

(1) Remove the deck lid assembly.

(2) Disengage the torsion bar roller from hinge being removed. **Use care when disengaging torsion bar as it is under a load.**

(3) Remove spring nut (Fig. 18) retaining hinge to hinge bracket and remove hinge.

Installation

(1) Use a new spring nut and install hinge on hinge bracket.

(2) Install deck lid assembly and connect torsion bar.

TORSION BAR REPLACEMENT

Removal

(1) Remove torsion bar **(underspring load)** from adjustment slot (Fig. 18).

(2) Unwind torsion bar.

(3) Unhook torsion bar from support bracket.

(4) Push torsion bar out of roller in hinge arm and remove from hinge support.

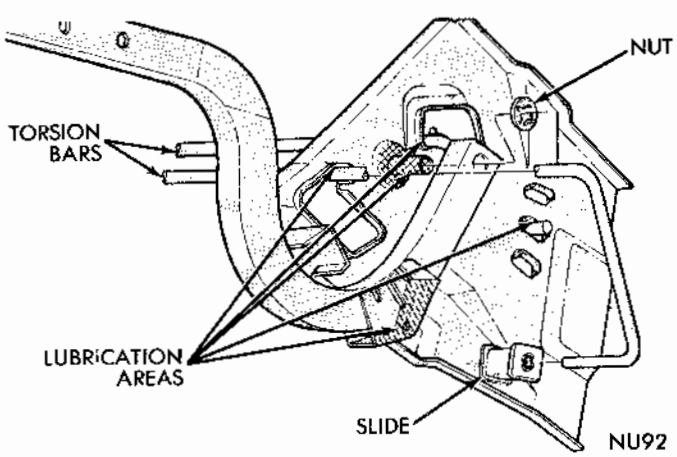

Fig. 18 - Deck Lid Torsion Bar

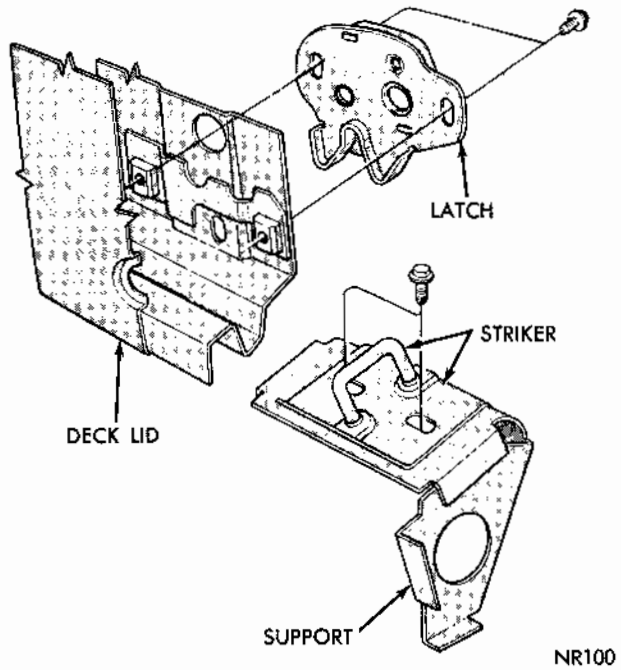

Fig. 19 - Deck Lid Lock

Installation

(1) Insert bar into hinge support.

(2) Insert end of torsion bar into roller in hinge arm.

(3) Hook torsion bar into support bracket.

(4) Wind torsion bar and insert end of bar into first adjusting slot.

(5) Place deck lid in various open positions and test tension of torsion bars.

(6) Adjust torsion bars progressively until deck lid stays in open position.

LOCK REPLACEMENT

The deck lid lock assembly (Fig. 19) is attached to the deck lid by two screws. Scribe the location of the lock mounting flanges to aid in installation.

LOCK ADJUSTMENT

Vertical adjustment of the deck lid lock is made at the lock attaching screws. The side adjustment is made at the striker attaching bolts.

LOCK CYLINDER

The deck lid lock cylinder (Fig. 19) is retained in the body by a spring steel "U" shaped clip attached from within the body.

WEATHERSTRIP

Apply an even continuous coat of cement to en-

MyMopar.com

tire weatherstrip contact surface of deck lid opening (Fig. 20) and install weatherstrip. Make sure molded corners of weatherstrip are correctly positioned.

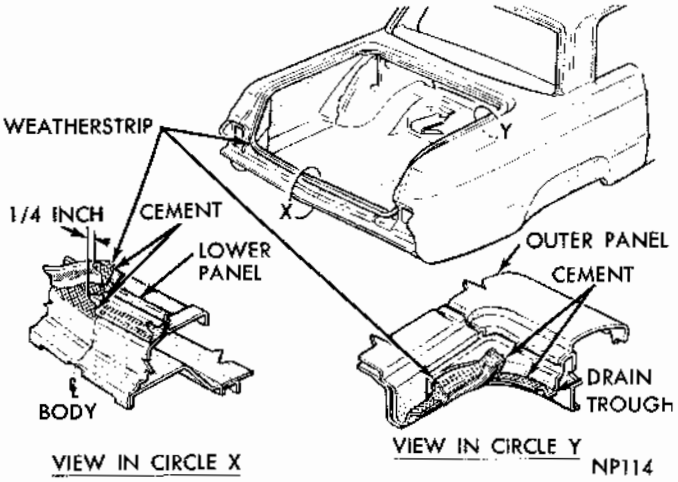

Fig. 20 - Deck Lid Weatherstrip

MyMopar.com

INTERIOR TRIM AND SEATS

INDEX

	Page
CONSOLE	17
COVER MATERIAL INSTALLATION	17
FLOOR COVERING	1
FRONT SEAT BACK LATCH	
Installation	14
Removal	14
GARNISH MOULDINGS	1
GLOVE BOX	2
Installation	2
Removal	2
GLOVE BOX LOCK	2
Installation	3
Removal	2
HEADLINING	3
Fabric Type	3
Hard Board Lining	6
LINING SECTION	6
Installation	6
Removal	6
POWER SEATS	17
RECLINING SEAT MECHANISM	11
Bucket Type	11
Installation	11
REPLACEMENT	15
Front Seat	15
Rear Seat Back	16
Rear Seat Cushion	16
SAFETY BELTS	6
SEATS	11
Adjustment	11
SHELF TRIM PANEL	6
Installation	7
Removal	6
SIX WAY MANUAL SEAT	15
STATION WAGON	
Cushion	17
Second Seat Back	16
Second Seat Cushion	16
Third Seat Back	17
Third Seat Back And Cover Panel	17

SERVICE PROCEDURES

INTERIOR TRIM

GARNISH MOULDINGS

When removing a garnish moudling that is overlapped by an adjoining moulding, loosen the end attaching screw to prevent possible damage to both mouldings.

To assure correct alignment when installing the mouldings install the screws finger tight, align moulding at each end and tighten screws. **Use care not to draw screws down too much or the moulding will be damaged at the screw holes.**

Removal and installation procedures for the garnish mouldings are covered with the related component.

Floor Covering

To remove the rear floor covering it is necessary to remove the front seat assembly and the rear seat cushion. The front seat mounting brackets are positioned on top of both front and rear floor covers. The rear floor covering is positioned under the front covering.

On units equipped with consoles, the carpet must be assembled over the floor pan mounting brackets and/or shifting lever. The body wiring is positioned through the holes in the carpet. The front edge of carpet is positioned under the rubber flap

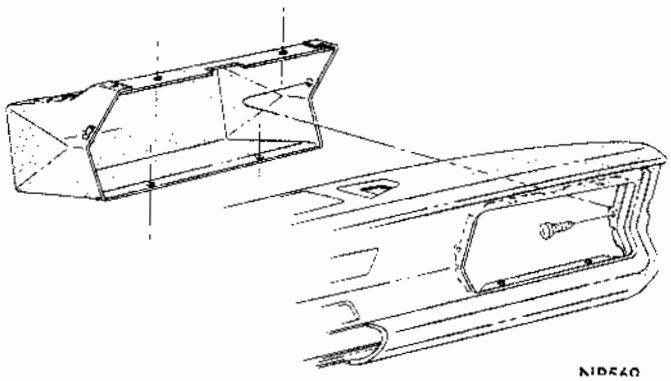

Fig. 1 - Glove Box - Dart

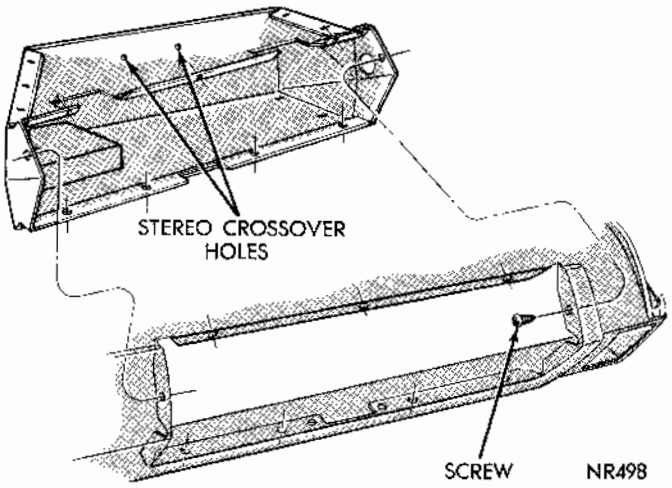

Fig. 2 - Glove Box - Coronet

MyMopar.com

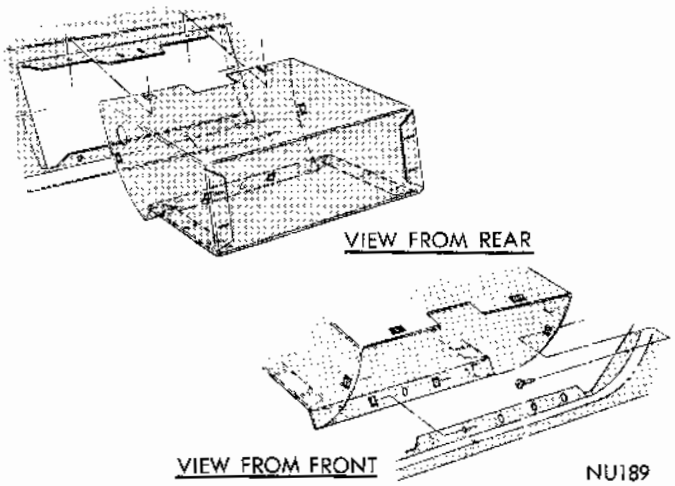

Fig. 3 - Glove Box - Dodge

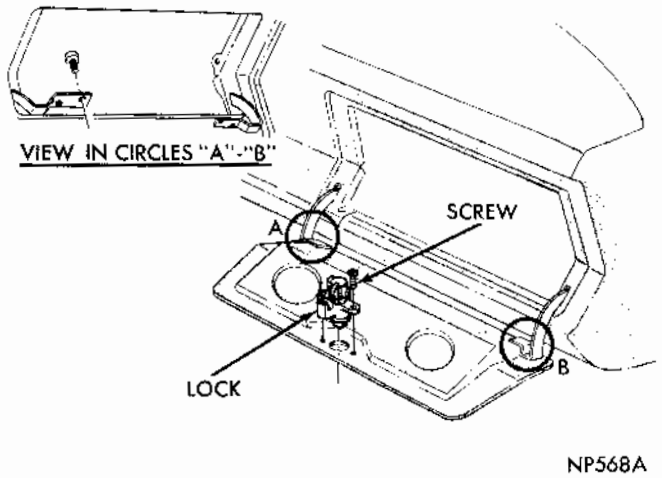

Fig. 4 - Glove Box Door - Dart

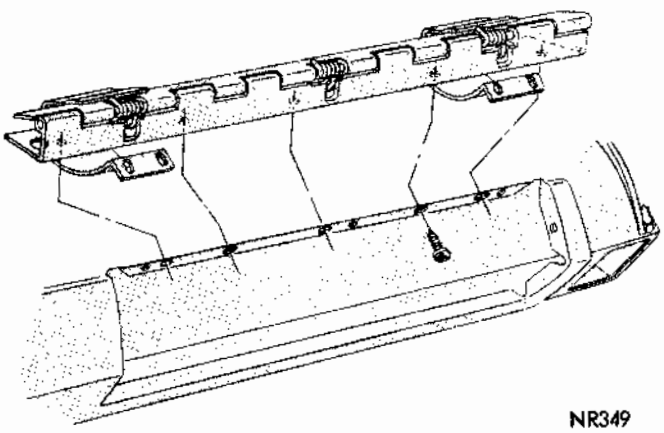

Fig. 5 - Glove Box Door - Coronet

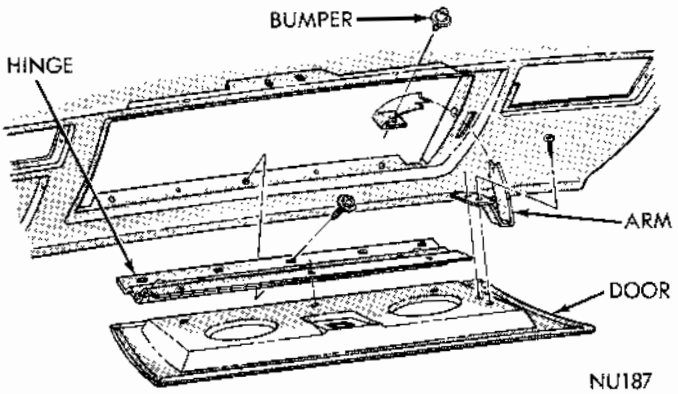

Fig. 6 - Glove Box Door - Dodge

on the cowl trim panel. With air conditioning, the carpet front edge must be positioned on front of the air conditioning housing flange and secured with the floor air outlet retainer bracket.

Glove Box

The glove box is a one piece folded type (Figs. 1, 2 and 3).

Removal

(1) Remove glove box door (Fig. 4, 5, and 6).

(2) Remove screws attaching box to top and side areas of opening (Fig. 1, 2 and 3).

(3) Remove glove box from under and to rear of instrument panel.

Installation

(1) From rear of instrument panel, position glove box in opening, making sure screw mounting holes are aligned.

(2) Install attaching screws at sides to hold in position.

(3) Install glove box door assembly and attaching screws at top.

Glove Box Assembly (Challenger)

The glove box is a two piece assembly.

(1) Position upper and lower assemblies together with screws. (Fig. 7).

(2) Install lamp lens.

(3) Position glove box to inner panel and secure with screws.

(4) Secure hinge to door.

(5) Install glove box door bumpers to panel.

(6) Install glove box door lock latch catch to panel.

Glove Box Lock

Prior to installing lock cylinder make sure tumbler is in a retracted position and key is fully inserted.

Removal

(1) Open glove box door and put latch lever into lock position, insert key and turn to lock position (Fig. 8).

(2) Remove key and with a small pointed tool or screw driver depress tab located in lock hous-

MyMopar.com

ing slot.

(3) Keep tab in depressed position insert key into lock and turn slightly to remove key cylinder.

Installation

(1) Install latch assembly to inner panel of glove box door.

(2) Insert lock and key into latch through glove box face. Turn key to unlatch lock and remove key.

(3) Depress tab and complete cylinder installation.

(4) Install glove box spring lock catch to upper flange of instrument panel.

(5) Close door and align to panel, open door and tighten all screws.

HEADLINING

Removal—Fabric Type

(1) Remove rear seat cushion, dome light, bezel and lens, sun visors, rear view mirror and coat hooks.

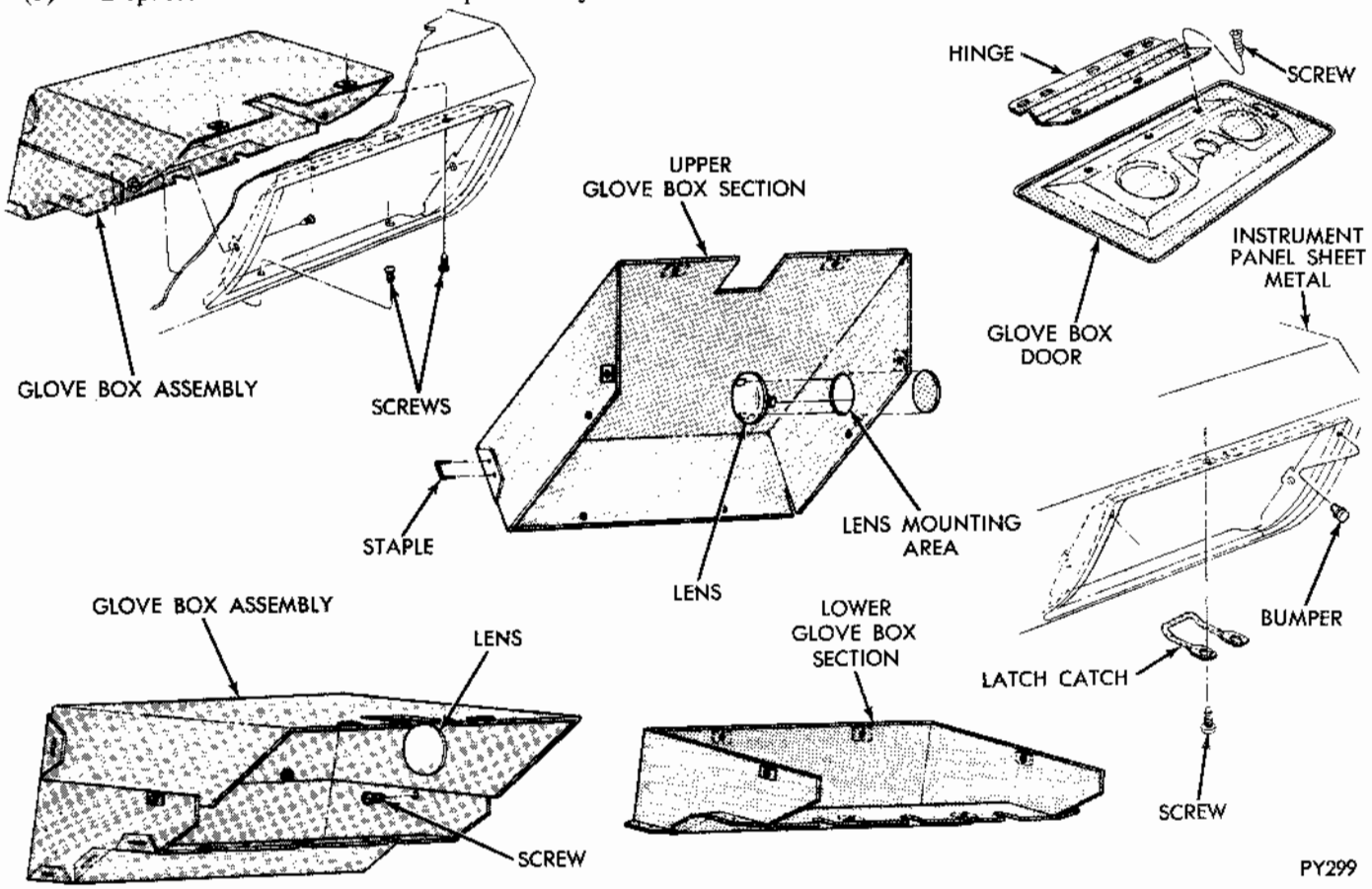

Fig. 7 - Glove Box Assembly - Challenger

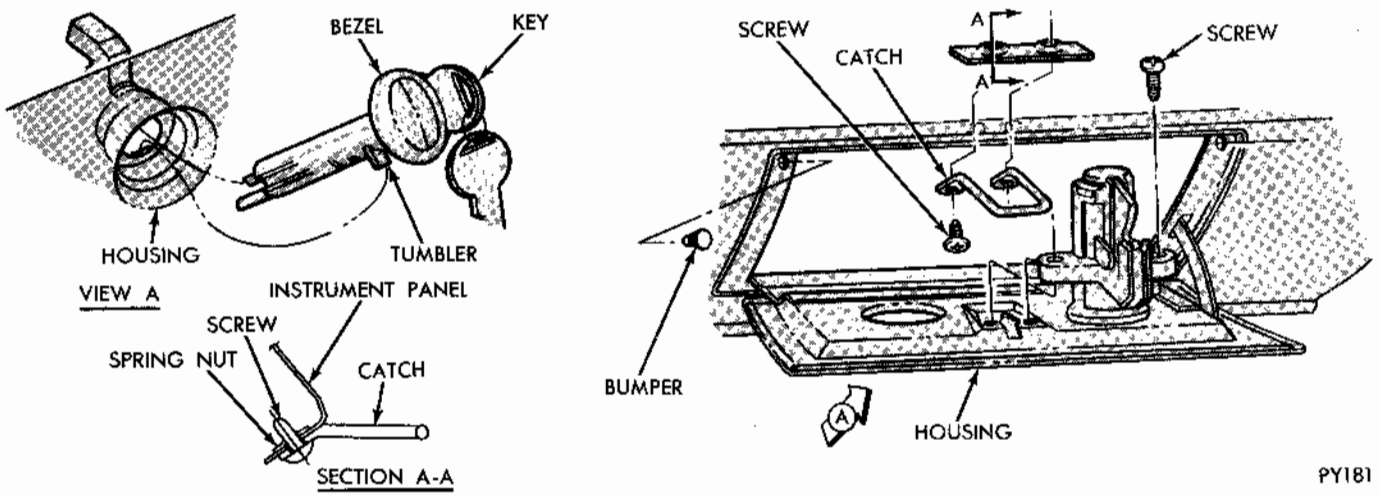

Fig. 8 - Glove Box Lock - ALL

MyMopar.com

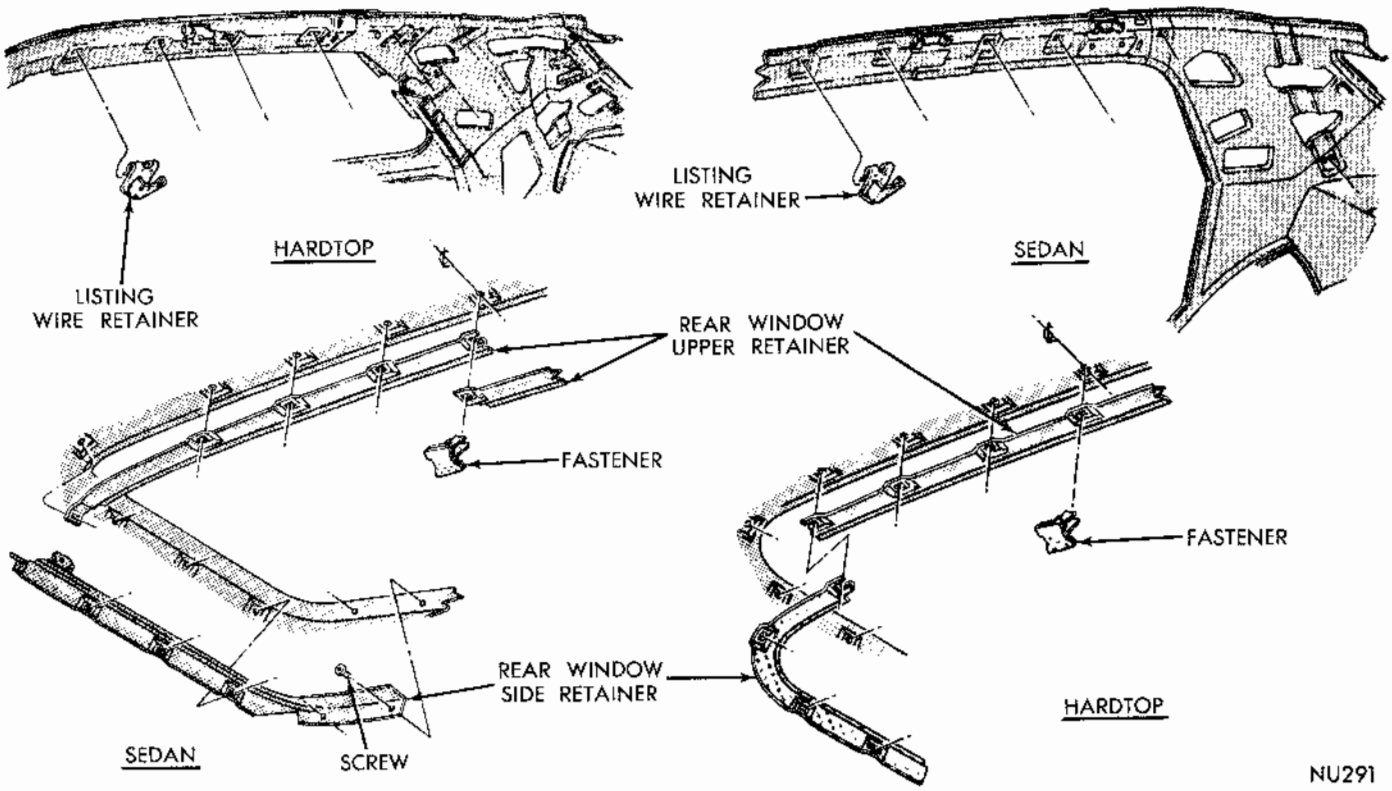

Fig. 9 - Listing Wire Retainers

(2) Remove headlining from cemented areas at windshield header and rear window opening.

(3) Remove headlining from under shelf panel.

(4) Using a dull bladed putty knife, disengage fabric from side rail retainer (Figs. 9, 10 and 11) by gently forcing material up and off of retainers and while maintaining pressure on fabric, pull

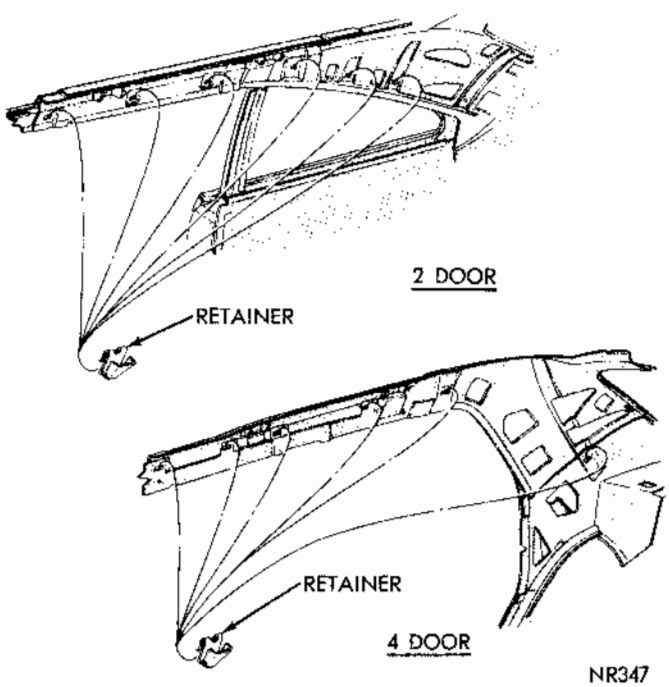

Fig. 10 - Listing Wire Retainers

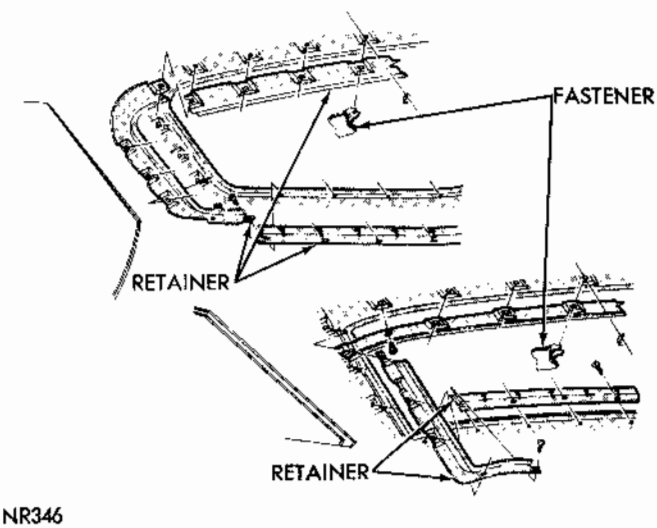

Fig. 11 - Rear Window Area Retainers

MyMopar.com

down and out. Work only small areas at a time.

(5) Remove headlining at the windshield header and from fasteners at rear window area (Figs. 9 and 11).

(6) Remove listing wires from side rail retainers and support wire from rear listing wire (Figs. 12 and 13).

(7) Remove all foreign material and cement from windshield header area and rear window opening areas.

(8) Remove listing wires from headlining and insert in comparable listing of new liner.

Installation

(1) Trim excess listing material even with edges of headlining.

(2) Locate centerline of lining at front and rear ends, cut a small notch as an aid in maintaining headlining alignment during installation.

(3) Locate and mark the centerline points of windshield and rear window openings.

(4) Center headlining at rear window and insert rear listing wire to retainer clips on roof rail extensions.

(5) Hook rear listing wire to wire supports and stretch material sufficiently to remove all wrinkles while maintaining front to rear alignment. The same amount of material should hang down at both sides.

(6) Insert remaining listing wires into roof side rail retainers following same cautions as in step 5.

(7) Apply cement to windshield header area and when cement becomes tacky, start at centerline area of windshield and position headlining on cemented area.

(8) Using a dull putty knife, secure liner on barbs at header area **do not install material at top of windshield posts** making sure there are no wrinkles and fabric seam is straight.

(9) Locate sun visor mounting bracket screw holes in header and cut holes in headlining slightly larger than attaching screws.

(10) Install sun visors and tuck in corners of headlining at top of windshield posts.

(11) Locate rear visor mirror bracket screw holes, cut holes in fabric slightly larger than screws and install mirror.

(12) When installing headlining at side rail retainers, work only a small section at one time to make certain seams are straight and material is free of wrinkles.

(13) Using a dull putty knife and working alternately from side to side, install headlining on side rail retainers.

(14) Apply cement at rear window opening and to quarter panel area, and after cement becomes

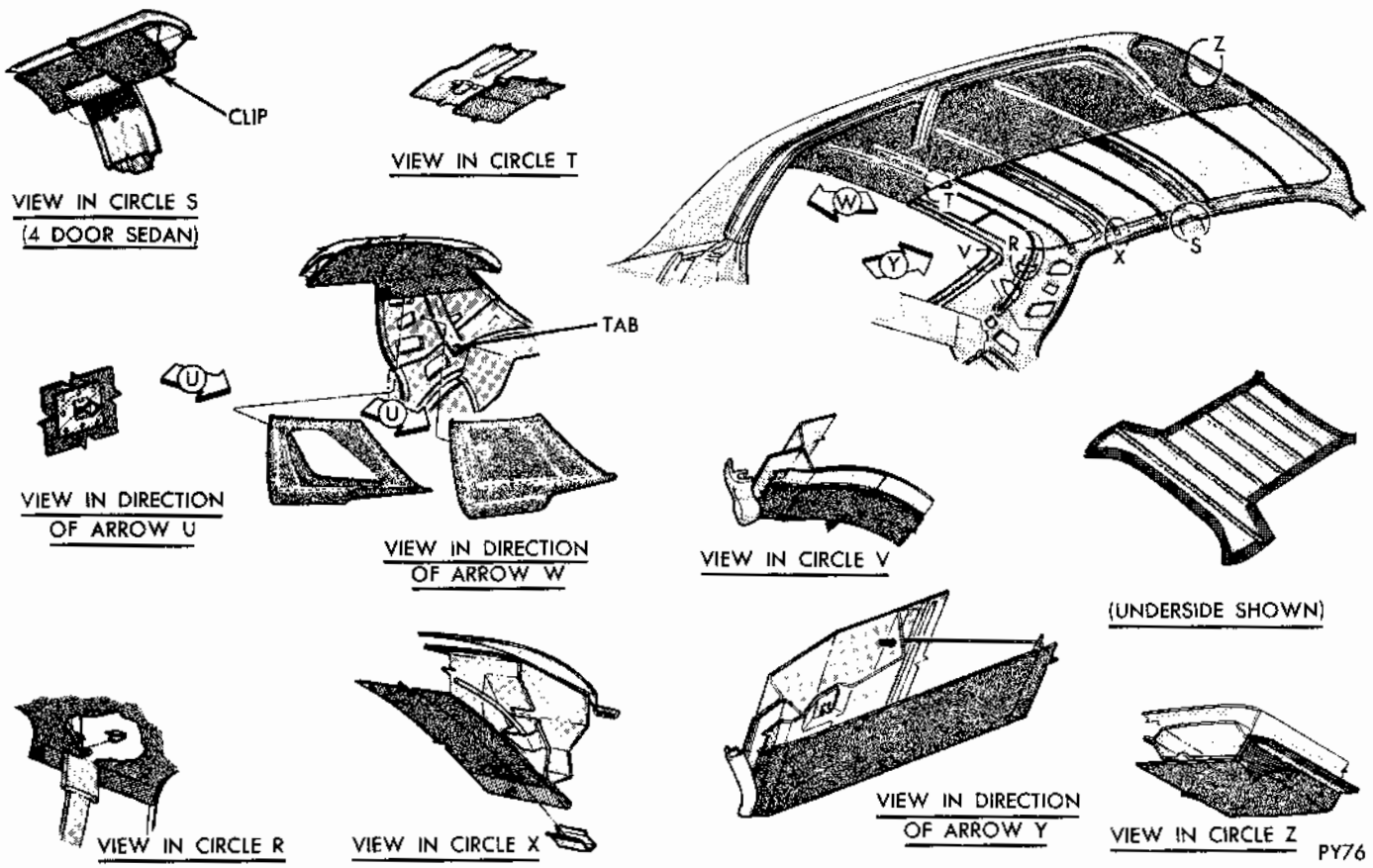

Fig. 12 - Soft Headlining

MyMopar.com

tacky, install headlining starting at top center and working outward and down the sides.

(15) Install rear seat cushion and coat hooks.

(16) Locate dome light opening cut out sufficient material for correct installation. Install dome lamp bezel and lens.

HARD BOARD LINING

Retainer Moulding Replacement

The individual hard board headlining sections are held in position with semi-flexible type plastic mouldings (Figs. 14 and 15) forced over the retainer sections of the roof bows. Starting at either outer end, remove end cap and pry the moulding off retainer. When installing moulding make certain it is fully seated and evenly spaced from side to side. Install end caps in retainer and over moulding ends.

Lining Section

To remove either the front or rear headlining sections, remove the windshield or rear window garnish mouldings and the one bow moulding at the panel inner edge.

Removal

(1) Remove plastic mouldings (Figs. 14 and 15) at edges of section being removed.

(2) Using a fibre tool force liner section off roof bow and out of side retainers.

(3) Inspect liner section for damaged edges.

Installation

(1) Position liner section on side retainers and in alignment with mating surface of roof bow.

(2) Push section up at center to seat it in side retainers.

(3) Align edges of section with moulding retainer on roof bows.

(4) Install mouldings on bow retainers and caps over ends.

Safety Belts

Refer to Figures 16 through 21 for methods and areas of attaching the safety belts.

Shelf Trim Panel

Removal

(1) Remove rear seat cushion and back.

(2) Remove defogger outlet and rear window side garnish mouldings.

(3) Loosen cemented edges of trim panel.

(4) Raise trim panel at front and remove retainers from shelf panel.

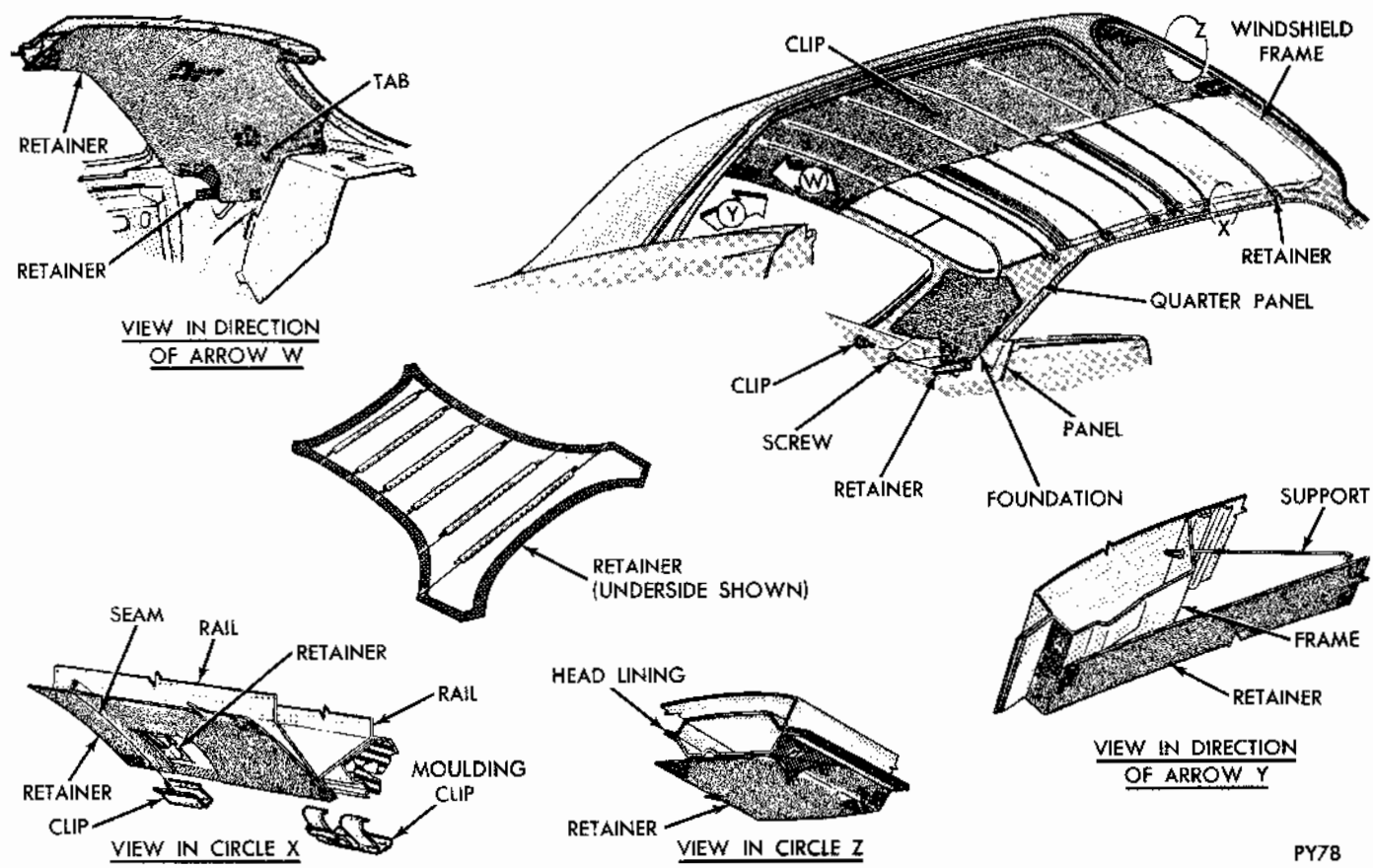

Fig. 13 - Soft Headlining

MyMopar.com

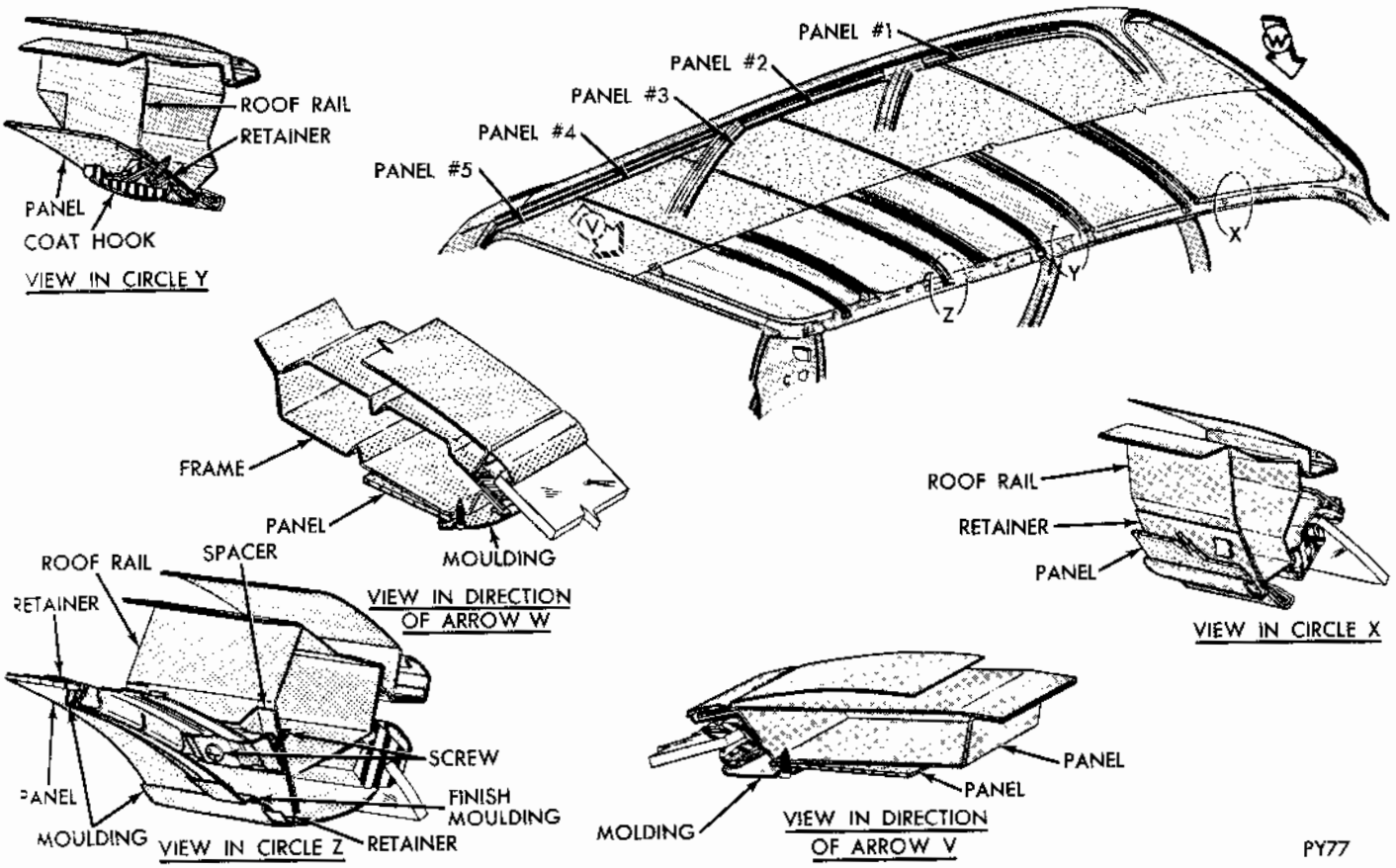

Fig. 14 - Hard Board Panel - Station Wagon

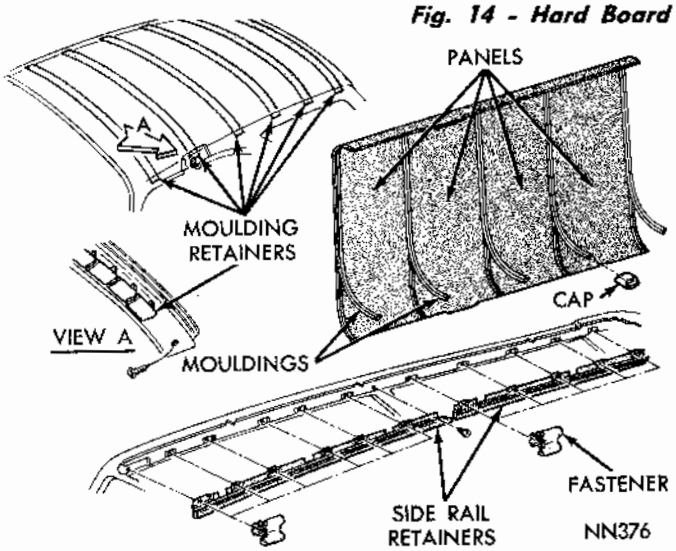

Fig. 15 - Hard Board Headlining

(5) Slide trim panel forward and up to remove.

(6) Raise front edge of silencer pad and using a putty knife separate the silencer from cement. Remove silencer.

(7) Remove all cement from shelf panel.

Installation

(1) Apply cement to same areas of shelf panel from which old cement was removed and install silencer pad.

(2) Install retainers in new trim panel.

(3) Slide trim panel into position and press retainers into shelf panel holes.

(4) Apply cement to shelf panel end extensions and press into position.

(5) Install defogger outlet and window side garnish mouldings and rear seat assembly.

MyMopar.com

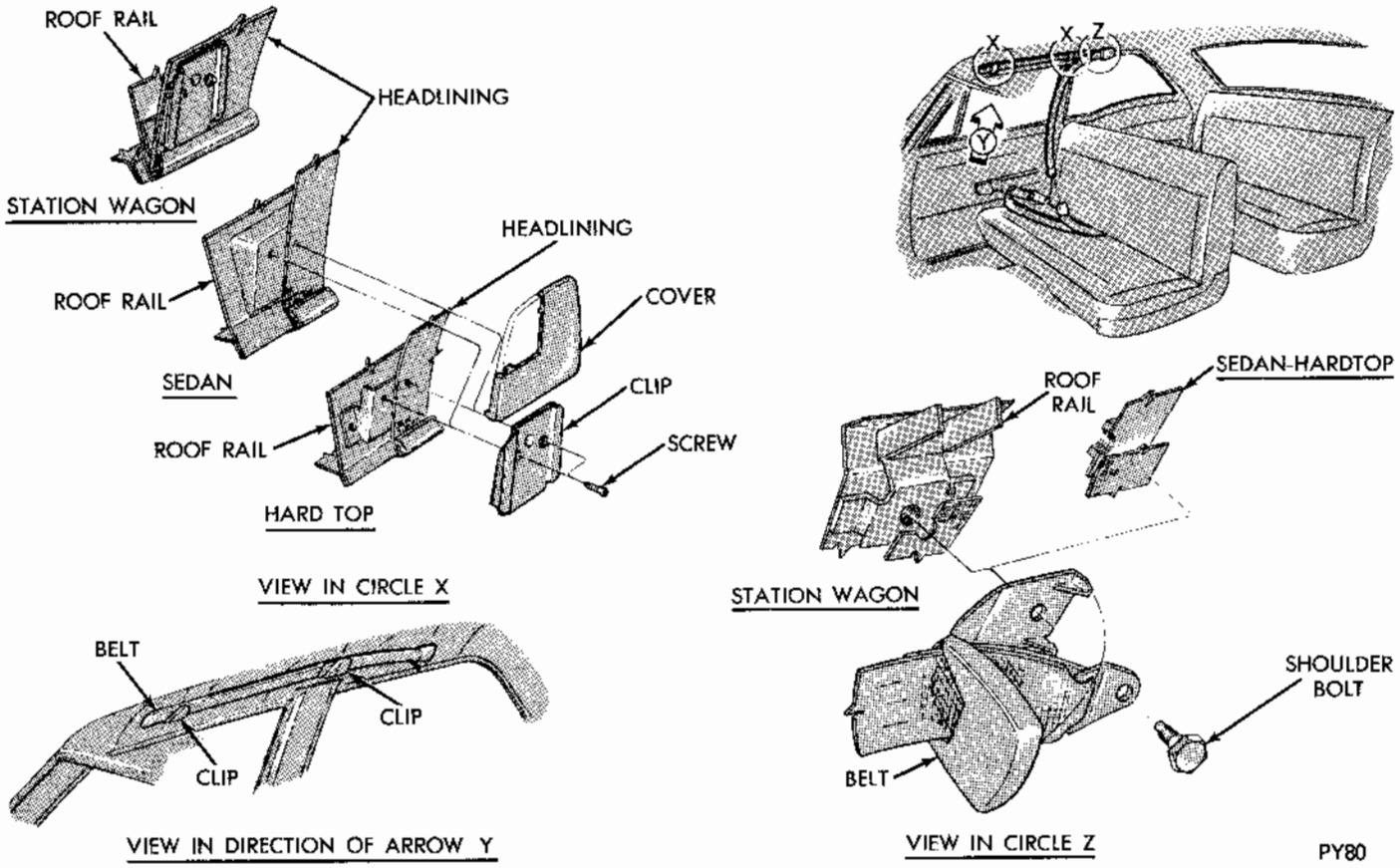

Fig. 16 - Front Seat Shoulder Belts

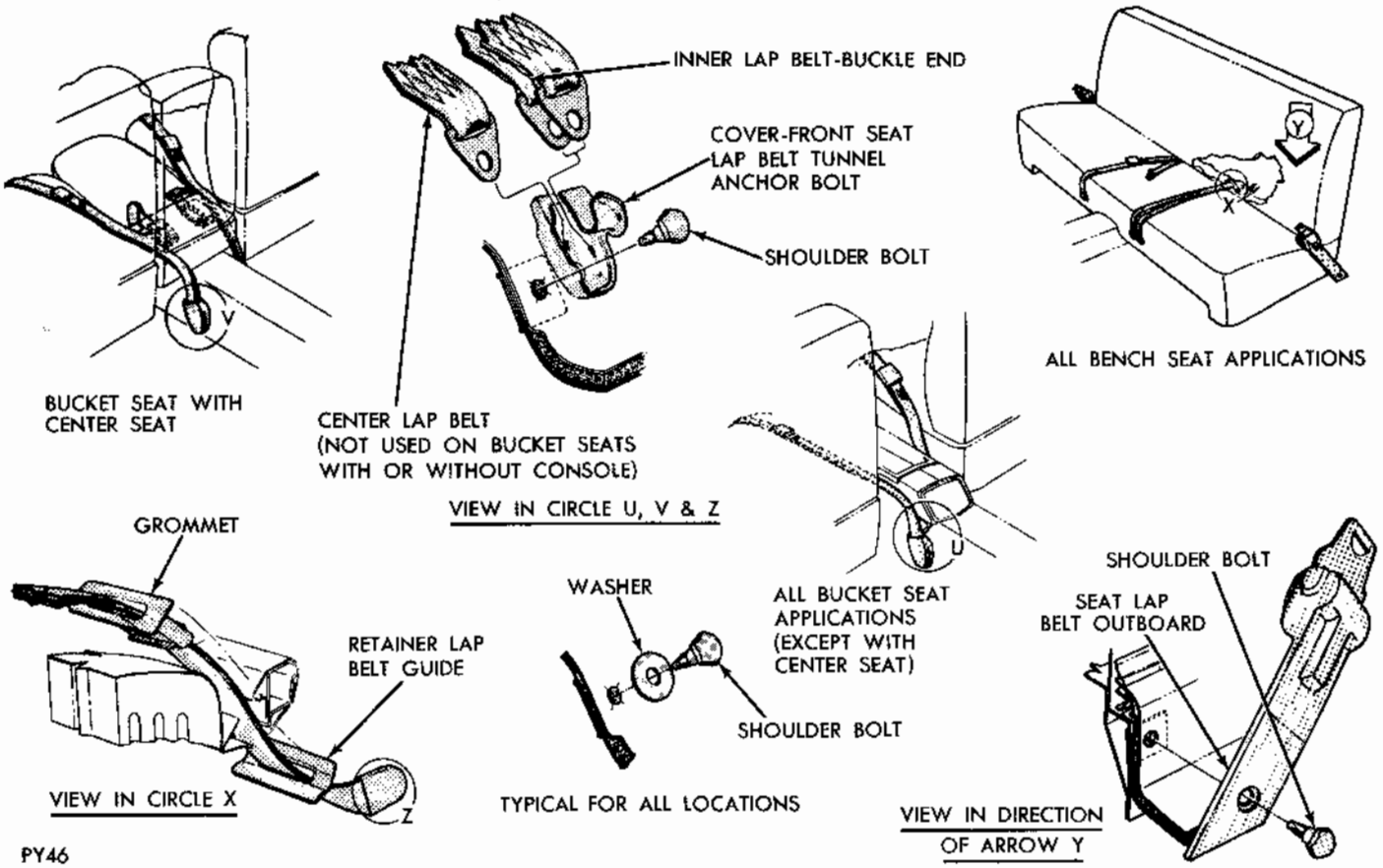

Fig. 17 - Front Seat Lap Belts

MyMopar.com

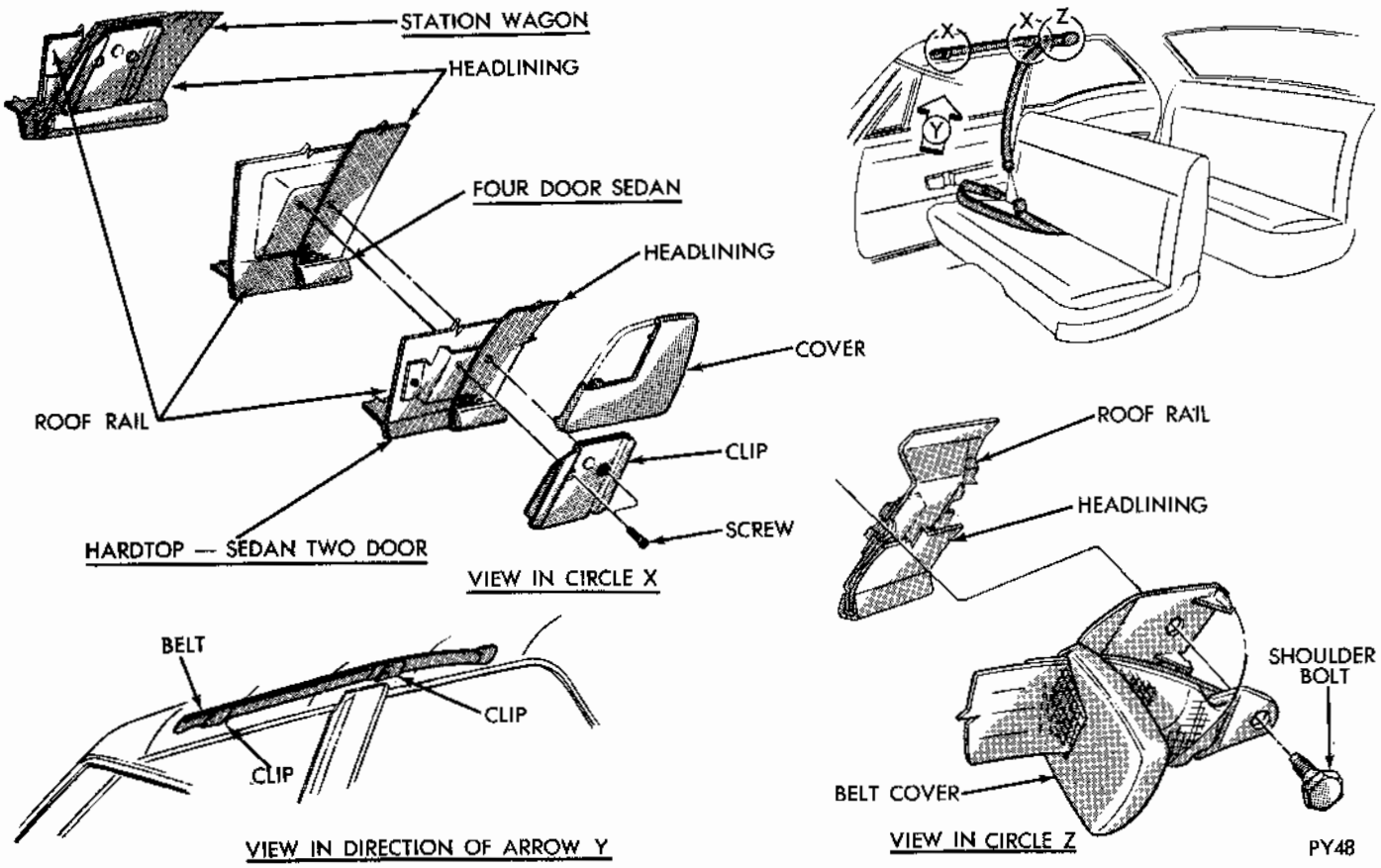

Fig. 18 - Front Seat Shoulder Belts

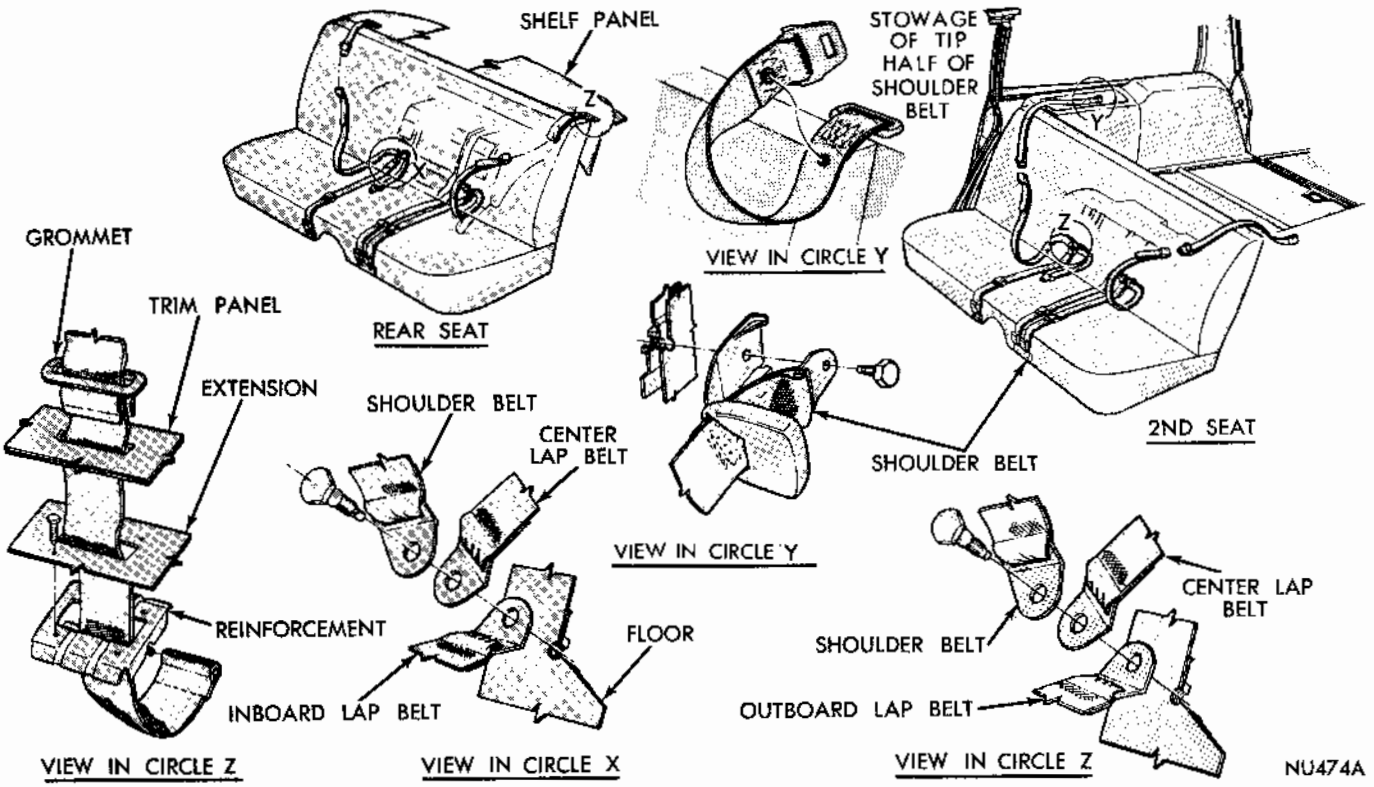

Fig. 19 - Rear and Second Seat Shoulder Belts

MyMopar.com

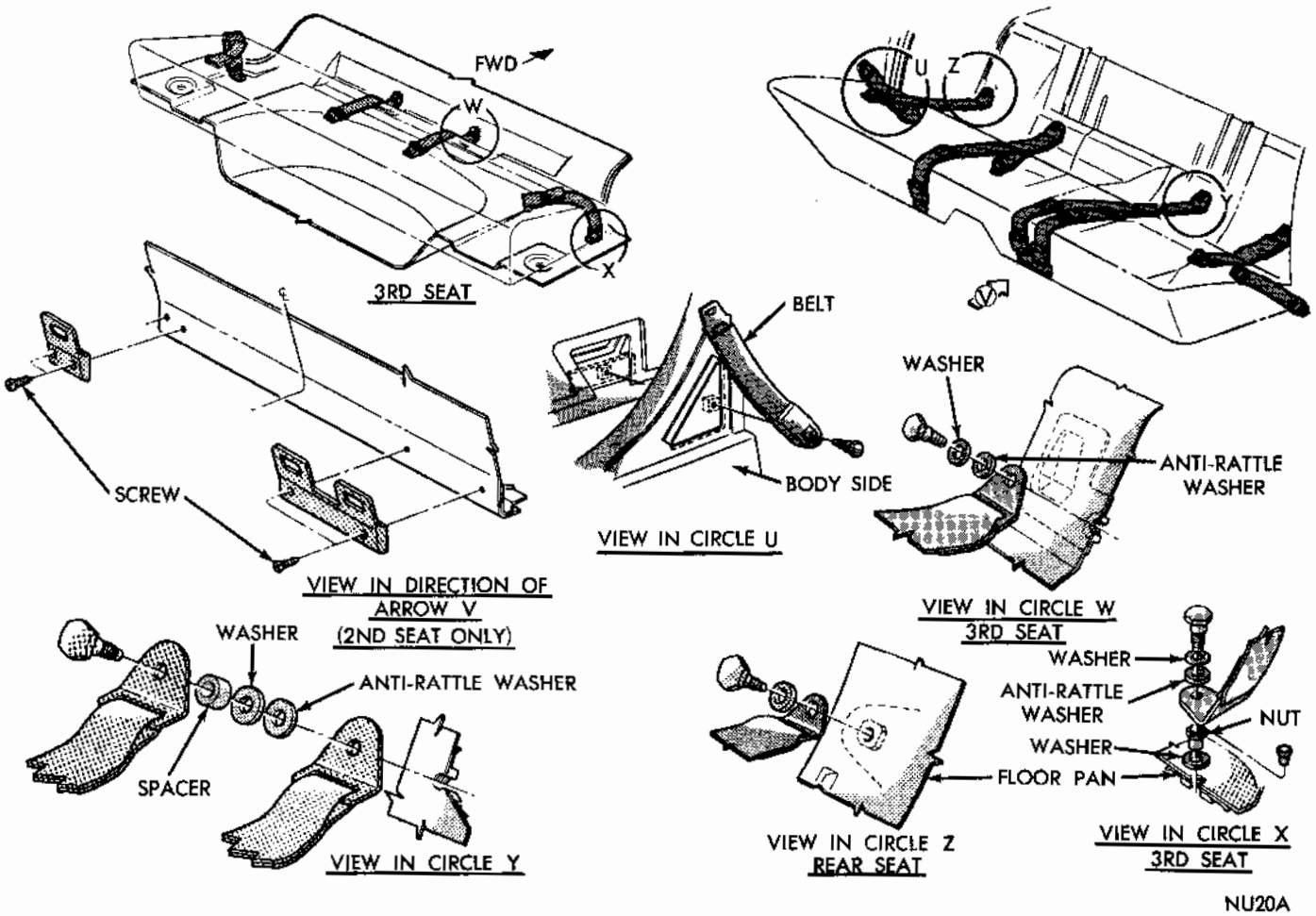

Fig. 20 - Rear and Third Seat Lap Belts

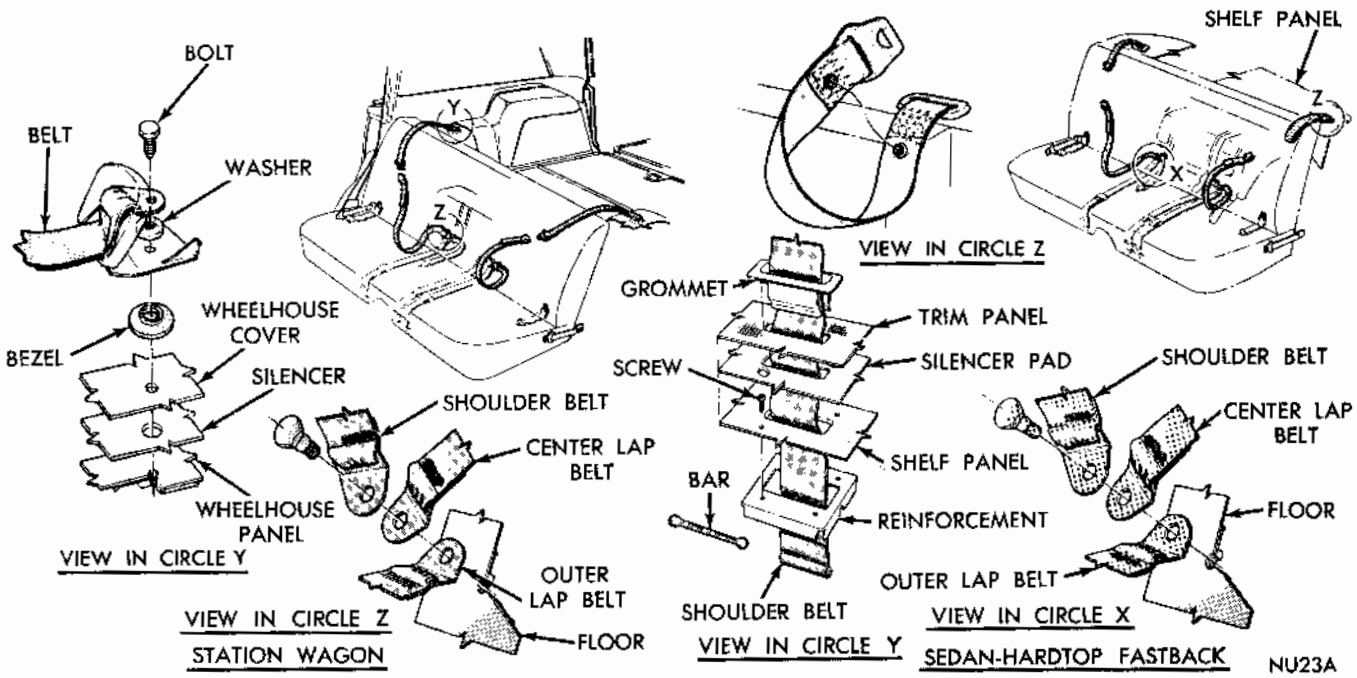

Fig. 21 - Rear Seat Shoulder Belts

MyMopar.com

SEATS

ADJUSTMENT

To raise or lower the front seat (Figs. 22 thru 25) loosen the adjuster mounting bolt nuts, under the floor pan, and remove or install shims between the adjuster base and floor pan.

To move seat "fore or aft" reposition the adjuster mounting bolts in the adjuster base.

RECLINING SEAT MECHANISM

For ease of assembling, the following procedures should be performed in sequence as listed.

BUCKET TYPE (Fig. 26).

Installation

(1) Before pad support, and cover are assembled, attach lever release to front recliner.

(2) Insert upper end of cable into hole in lever. Attach cable and latch to front spring and cover using screw.

(3) Install spacer on rod end of adjuster (Figure 26). **(Seat Cannot Be Assembled Without Spacer).**

(4) Insert adjuster into back of recliner with clevis end on bracket and rod end protruding

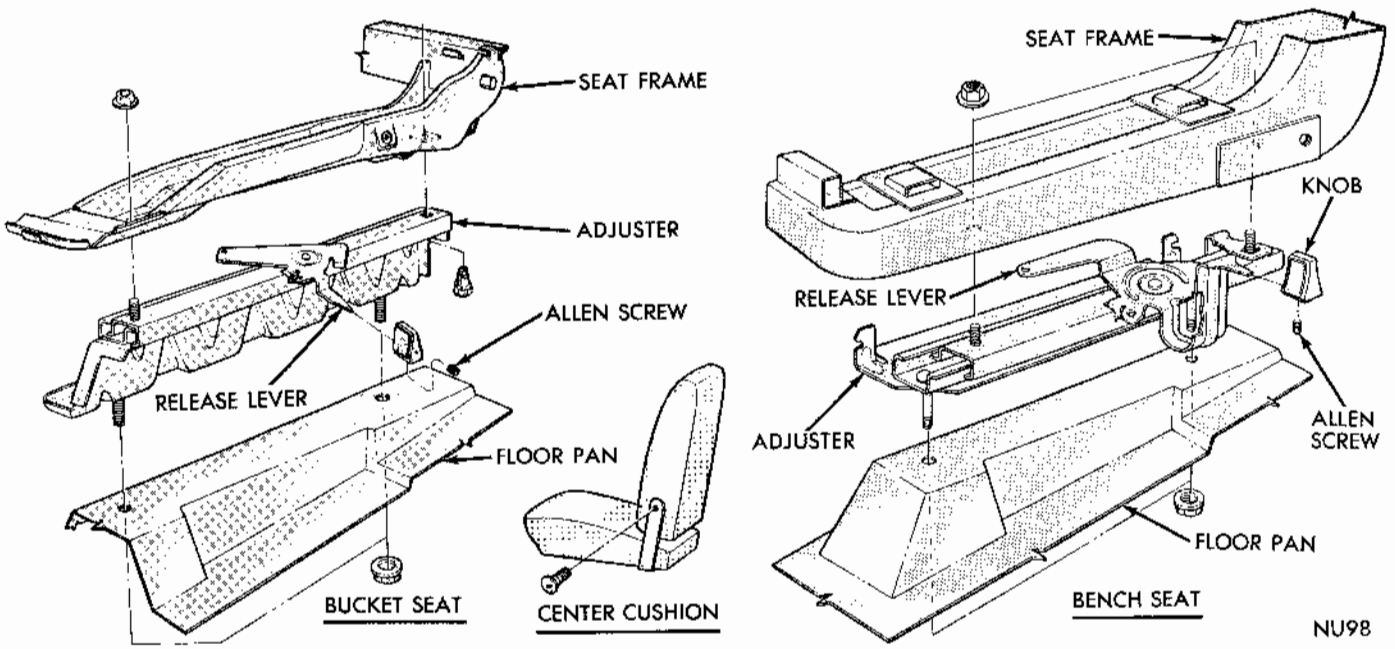

Fig. 22 - Front Seat Adjuster - Dart

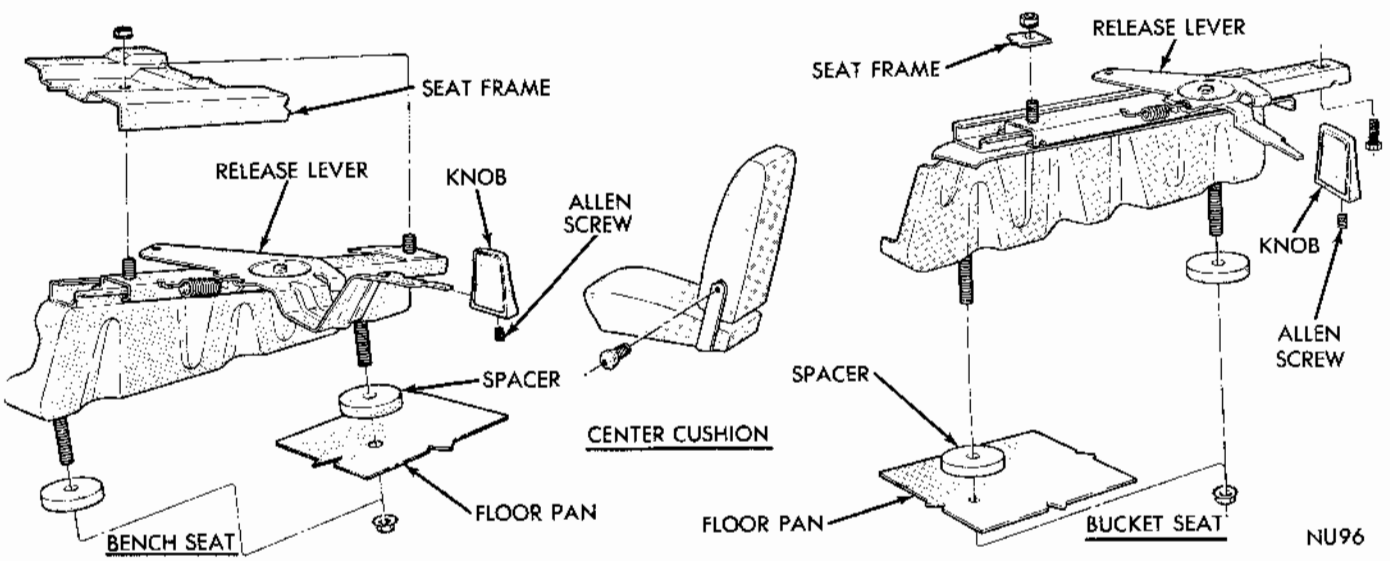

Fig. 23 - Front Seat Adjuster - Coronet

MyMopar.com

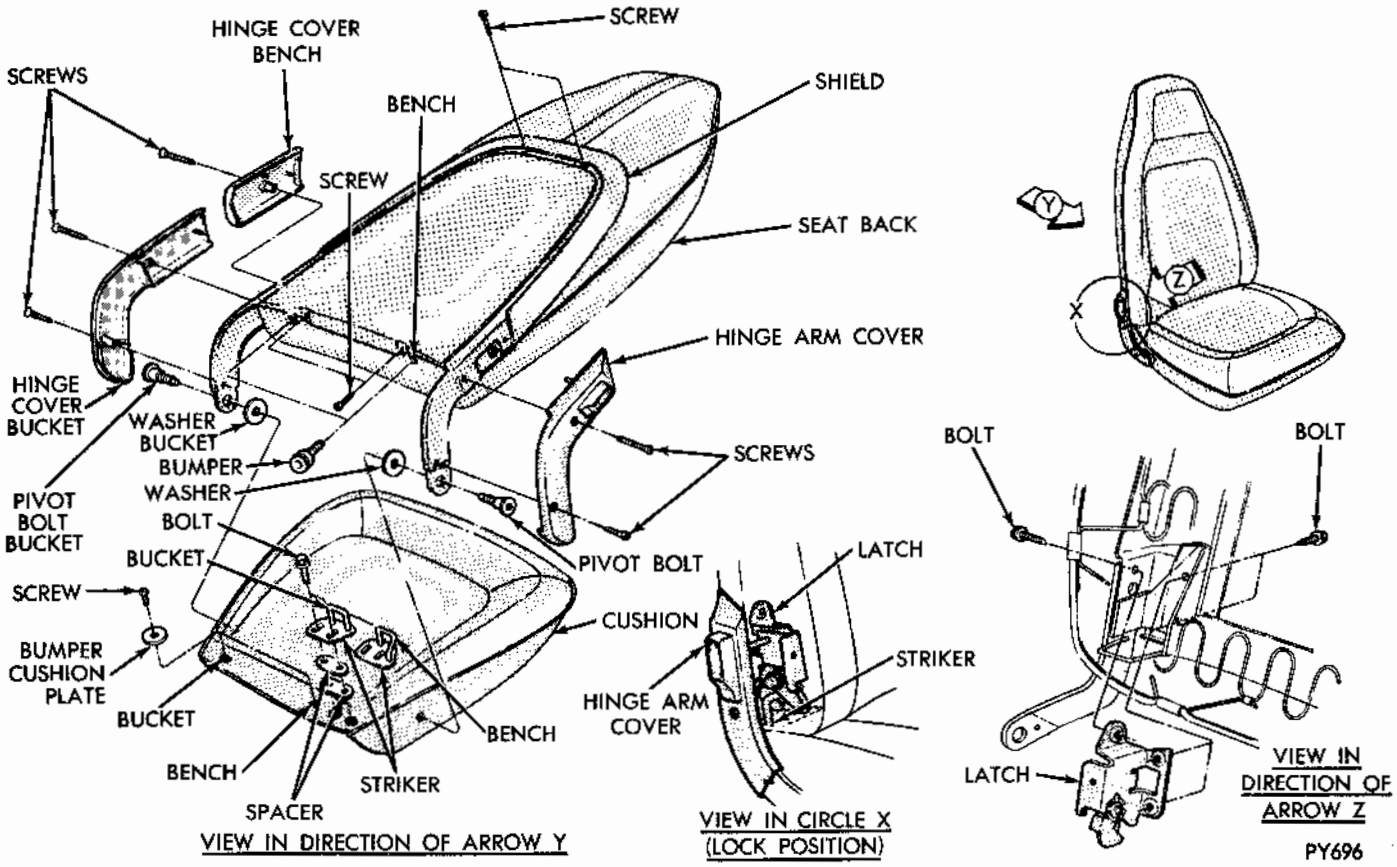

Fig. 28 - Front Seat Back Latch - Challenger

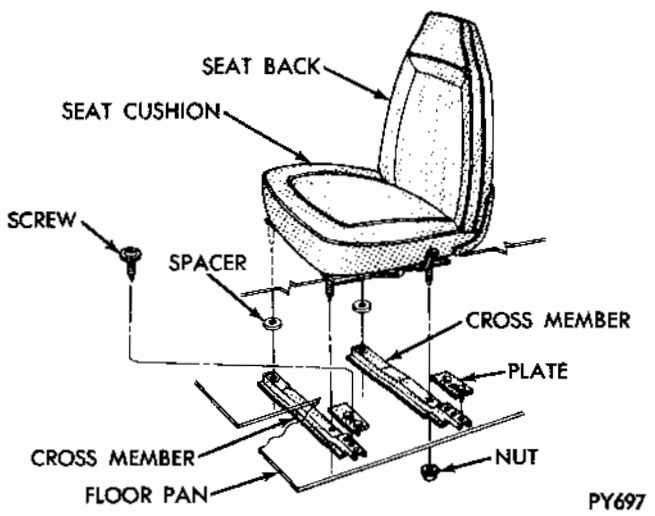

Fig. 29 - Six Way Manual Seat - Challenger

All two door vehicles incorporate latches to prevent the seat back from falling forward (Fig. 27).

Removal

(1) Remove snap ring and flat washer from pivot pin.

(2) Remove end of spring from latch and remove latch assembly.

(3) Remove spring from groove of pivot pin.

(4) Remove knob and clip from end of latch.

Installation

(1) Position spring on pivot pin and align inner end of spring in pivot groove.

(2) Install latch assembly on pivot pin and insert outer end of spring in notch on latch.

(3) Install flat washer and retainer firmly against latch assembly.

(4) Install clip and knob on latch.

Front Seat Back Latch - Challenger (Fig. 28)

(1) Install latch to back spring assembly before spring is trimmed. Insert bolt through back spring and into latch. (See view in direction of arrow Z).

(2) Trim back spring assembly.

(3) Install shield to trimmed back spring.

(4) Screw bumper assembly into back spring to within .87 inch of lower edge of lower cross member of back spring.

(5) Fasten plate to trimmed cushion spring by inserting screw through plate and into cushion spring. Note difference in position for bucket seat and bench seat (See view in direction of arrow Y).

(6) Mount striker assembly to trimmed cushion spring by inserting bolt through slot in striker and hole in spacer and into tapping plate in cushion spring. Note: Difference in striker assembly and quantity of spacer required for bucket and bench seat. Striker assembly should be positioned so that

MyMopar.com

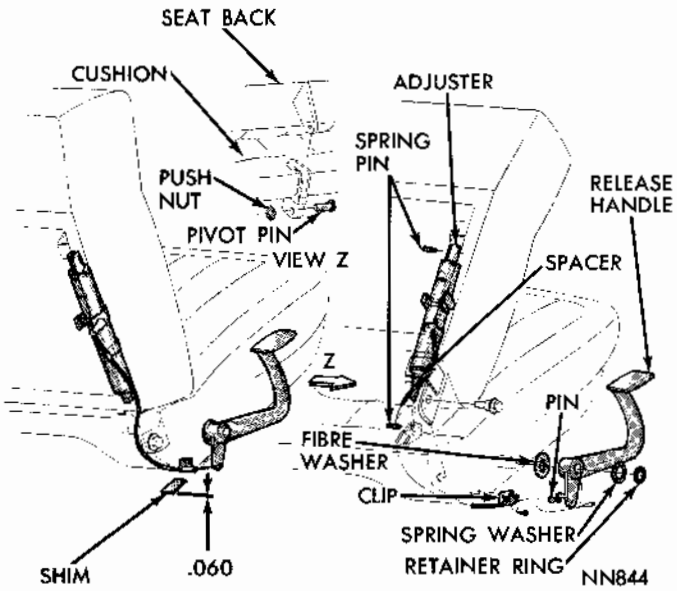

Fig. 30 - Reclining Seat Mechanism - 4 Door Models

bolt will be in mid-way position of slot.

(7) Mount trimmed back spring to trimmed cushion spring by installing pivot bolt through large hole in "Hockey Stick" and hole in washer and into weld nut in cushion spring.

(8) Attach cover to back spring by inserting screw through cover and into back spring. Note: Difference in cover for bucket and bench seat.

(9) Attach cover to back spring by inserting screw through cover and into back spring.

Note: Rod on back side of button in cover passes through hole in "Hockey Stick ".

(10) Check operation of seat back latch by folding back rearward to engage lock latch with rod on striker. Then press button on cover inboard. It should release the latch and allow the seat back to be folded forward. If latch does not engage rod, move striker forward. If latch does not disengage from rod, remove spacer and check operation of latch and re-position bumper as required.

Six Way Manual Seat (Fig. 29)

The plate should be mounted prior to carpet installation.

(1) Install plate assembly to floor pan.

(2) Install screw to plate.

(3) Install seat to floor pan after carpet installation.

(4) Install spacer to inboard holes of front and rear crossmembers.

(5) Secure with nut to studs.

4 Door Models

Make certain spacer is installed on rod end of adjuster assembly (Fig. 30), otherwise seat cannot be assembled.

(1) Insert adjuster and cable assembly into rear of seat back, with clevis end on bracket and rod end protruding through hole in bottom facing of seat back.

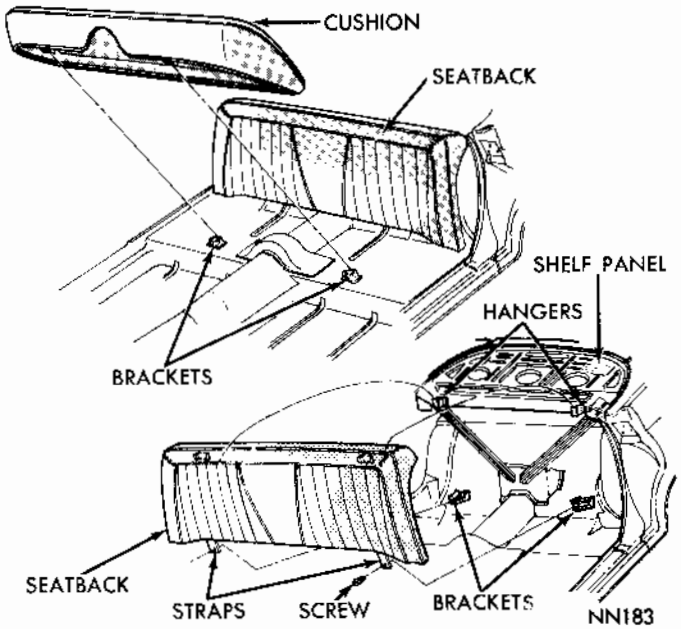

Fig. 31 - Rear Seat Cushion and Back

(2) Route cable between edge of bottom facing and back spring frame of seat back. **Do not use hole for adjuster rod.**

(3) Position adjuster clevis end in bracket on seat back and secure with spring pin.

(4) Position seat back on cushion, with shoulder bolt on right side and pivot pin and push nut on left side.

(5) Position cable to rear of seat cushion.

(6) Position adjuster rod end in cushion bracket and secure with spring pin.

(7) Slide fibre washer, release handle and spring washer over release shaft and secure in place with retaining ring.

(8) Push retainer pin through hole in release handle, slide eye of adjuster cable over pin and fasten with cotter pin.

(9) Slide reatining clip over cable housing and fasten to side of seat cushion with two screws finger tight only.

(10) Insert .060 inch shim between release handle and bottom of seat cushion. Push release handle down firmly against shim and pull cable housing through retaining clip (away from handle) to remove all slack.

(11) Tighten screw to lock sheath in retaining clip and remove shim.

(12) Raise seat back to upright position and remove spacer from rod end of adjuster.

(13) Test operation of mechanism.

REPLACEMENT

Front Seat

The front seat cushion is an integral part of the seat frame. All seat frames are attached to the

MyMopar.com

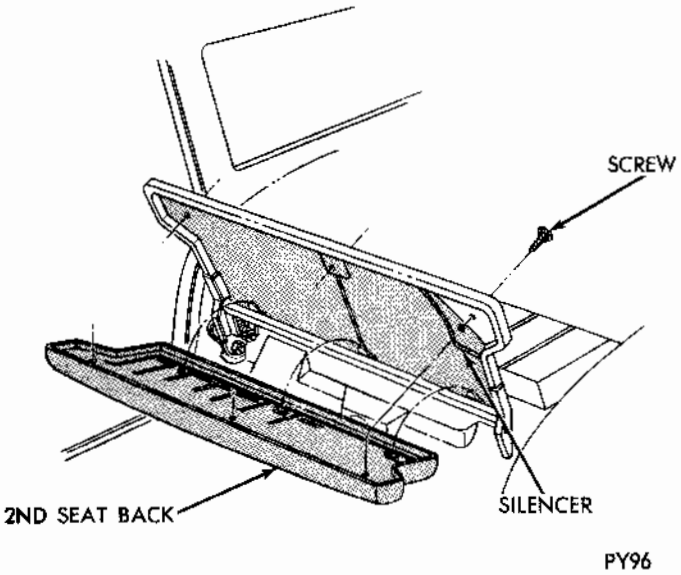

Fig. 32 - Second Seat Back

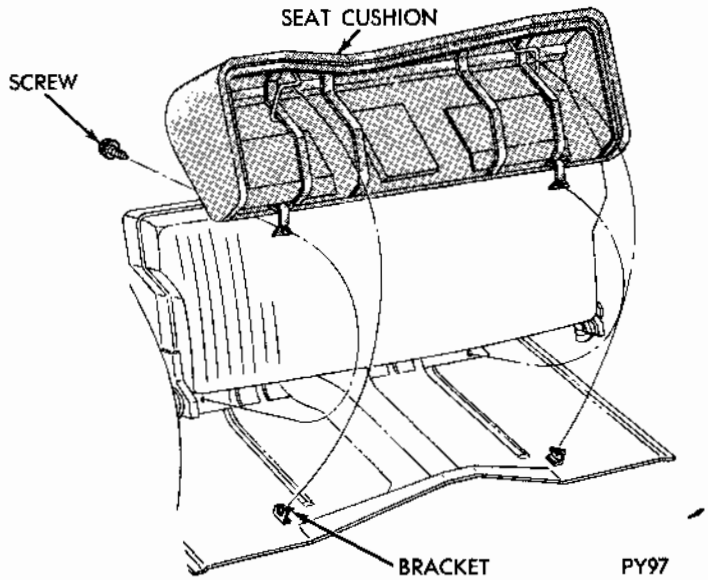

Fig. 33 - Second Seat Cushion

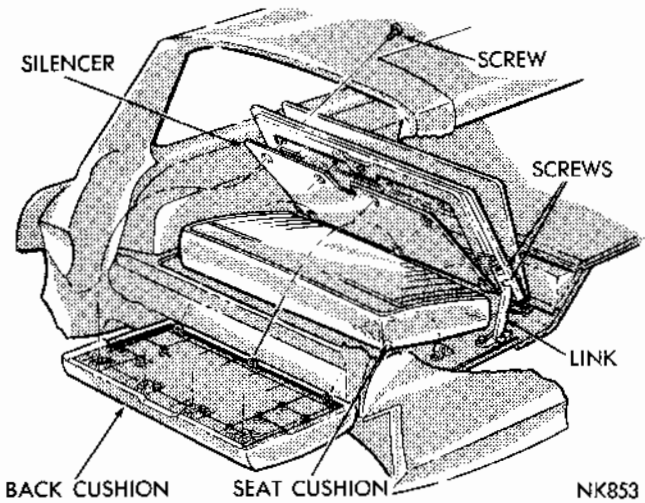

Fig. 34 - Third Seat Back and Cushion

adjusters by studs and nuts. Remove nuts from adjuster mounting bolts, under floor pan and remove seat.

Rear Seat Cushion

The rear seat cushion is held in place (Fig. 31) by inserting the rear edge of the cushion under the seat back. The front lower frame of the seat incorporates retainers which fit into slotted brackets welded to the floor pan.

Rear Seat Back

The rear seat back (Fig. 31) is held in place by tangs on the upper edge of the seat frame being positioned over hangers on the shelf panel. The lower edge of the seat back incorporates two metal straps which are attached to mounting brackets welded to the rear floor pan.

STATION WAGON SECOND SEAT BACK

Removal

(1) Remove screws attaching set back to hinge assemblies (Fig. 32)

(2) Release catches from seat back and remove assembly.

Installation

(1) Position seat back on hinge assemblies.

(2) Install hinge to seat back screws.

(3) Test engagement of seat back catches and adjust as necessary.

SECOND SEAT CUSHION

Removal

(1) Raise rear floor hinged panel at rear of seat cushion assembly (Fig. 33) to expose seat cushion to floor pan attaching screws.

(2) Remove screws attaching cushion to floor pan.

(3) Move cushion slightly rearward to disengage locking bars at front bottom side of cushion and remove cushion.

Installation

(1) Place cushion in position, making certain locking bars at bottom are engaged in brackets on floor pan.

(2) Raise hinged portion of floor, at rear of seat cushion, and install screws attaching cushion mounting straps to floor pan.

MyMopar.com

THIRD SEAT BACK

Removal

(1) With third seat back in the UP position (Fig. 34) remove the seat hinge links screws.

(2) Remove seat back and support panel assembly.

(3) The seat back cushion is retained with screws to the seat back panel.

Installation

(1) Position back cushion on back panel and install retainer screws.

(2) Position seat back and support panel assembly on hinge links and install retaining screws.

CUSHION

The third seat cushion (Fig. 34) is attached to hinges which in turn are attached to the quarter inner panels by screws.

Removal

(1) Remove screws attaching hinges to quarter inner panel.

(2) Remove rear seat cushion assembly.

Installation

(1) Position cushion assembly on rear floor pan.

(2) Install hinges on quarter inner panel and tighten securely.

(3) Test seat operation, inspect fit and alignment.

THIRD SEAT BACK AND COVER PANEL

Refer to Figure 35 for the attaching points and method of attachment for the third seat back and cover panel assembly.

POWER SEATS

Refer to the Electrical Group for tests, wiring diagrams and complete servicing procedures.

COVER MATERIAL INSTALLATION

Prior to installing the original or new cover, make certain the spring pad (where used) and pad cover are centered on the spring and are firmly attached. **Make certain all buttons and medallions (where used) are pulled down securely and locked in position.**

As an aid in attaching the cover correctly, mark the areas on the spring where the original cover was attached with hog rings, screws or drive nails.

CONSOLE

Consoles (Figs. 36 and 37) are attached to welded brackets on the floor pan tunnel with screws and bolts. To loosen the rear mountings, raise the carpet lower edges to expose the screw and bolt. All other attaching screws are accessible from within the console.

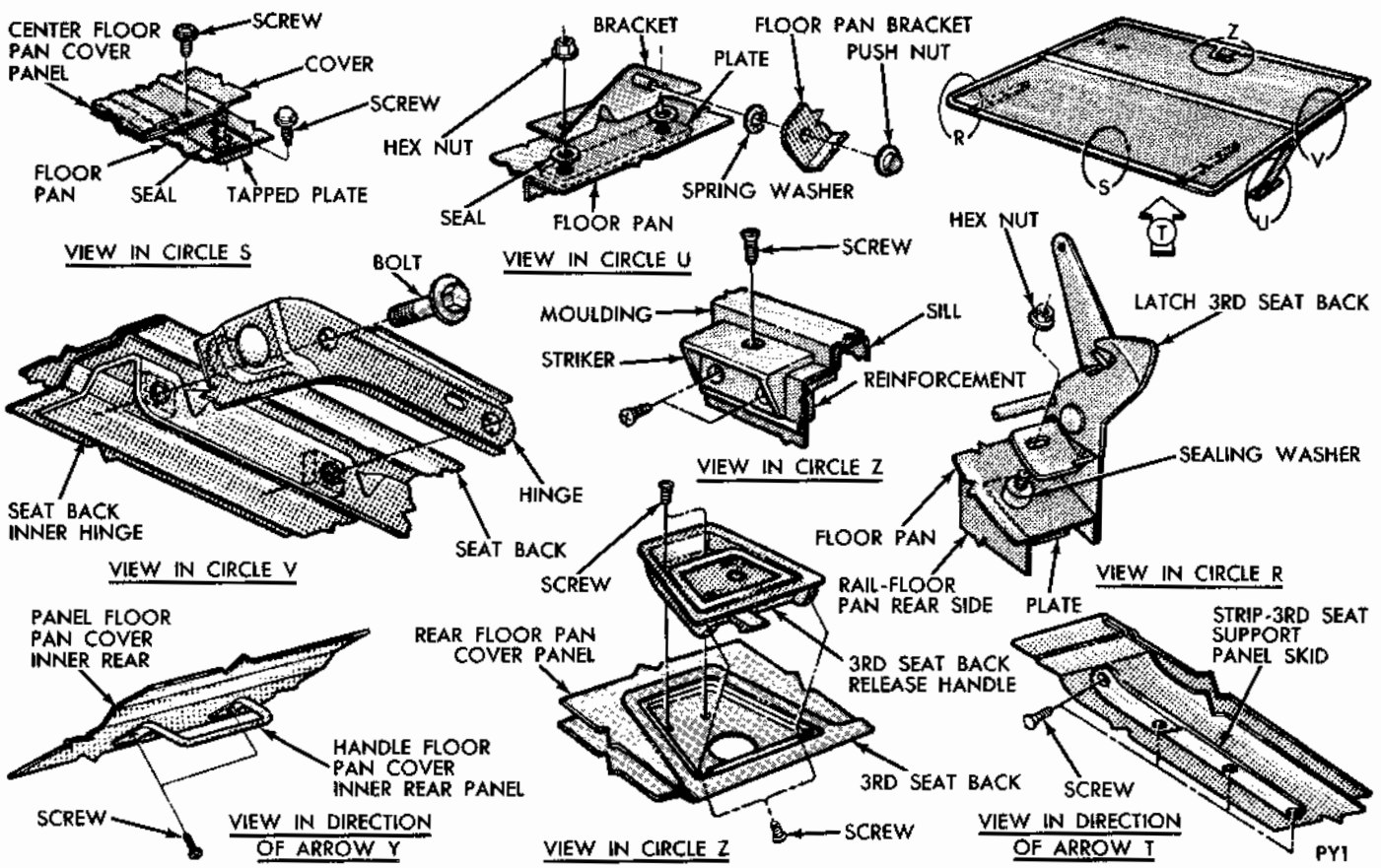

Fig. 35 - Third Seat Back and Cover

MyMopar.com

ELECTRICAL

CONTENTS

	Page
Convertible Top	36
Electric Locks	31
Exterior Lighting	1
Power Seats	33
Power Window	29
Specifications	40
Tailgate Washer	37
Wiring	43

EXTERIOR LIGHTING

HEADLIGHTS

INDEX

	Page
Compensating the Aimers	2
General Information	1
Headlight Sealed-Beam Replacement	4
Measuring Headlight Aim	3
Mounting and Adjusting the Aimers	3
Pre-Aiming Instructions	2
Service Diagnosis	1
Switch—See "Instrument Panel"	
Testing Aimer Calibration	3
Visual Headlight Adjustment—(Without Aimers)	4

GENERAL INFORMATION

Dual Headlight System

The dual headlight system consists of four sealed beam bulbs. The two outboard bulbs are of the two filament type for low and high beam. These bulbs are identified by a numeral (2) molded in the lens. The two inboard bulbs have only one filament and are marked by a numeral (1) molded in the glass.

The bulbs cannot be installed wrong as the mounting lugs for the number one (1) and number two (2) bulbs are offset at different angles.

On high beam, the number 1 bulbs provides the high intensity "reach" down the highway and the off focus filament in the number 2 light provides the "body" light which illuminates the side of the road, ditches, etc. On low beam, only the number two (2) bulbs operate.

Single Headlight System

The single beam system consists of two sealed beam bulbs. The bulbs are the two filament type for low and high beam and are marked by a number 2 molded in the lens.

The low beam is intended for use in congested areas and on highways when meeting other vehicles within a distance of 500 feet. The high beam is intended primarily for distant illumination and for use on the open highway when not meeting other vehicles.

Manual on and off operation is controlled by a switch mounted on the instrument panel while manual operation of the high-low beam is controlled with a foot operated dimmer switch mounted on the left side of the floor pan.

SERVICE DIAGNOSIS

Condition	Possible Cause	Correction
HEADLIGHTS DIM (engine running above idle)	(a) High resistance in lighting circuit.	(a) Test lighting circuit including ground connection. Make necessary repairs.
	(b) Faulty sealed beam units.	(b) Replace sealed beam units.
	(c) Faulty voltage regulator.	(c) Test voltage regulator and alternator. Make necessary repairs.

MyMopar.com

SERVICE DIAGNOSIS

Condition	Possible Cause	Correction
LIGHTS FLICKER		
	(a) Loose connections or damaged wires in lighting circuit.	(a) Tighten connections and check for damaged wiring.
	(b) Light wiring insulation damaged producing momentary short.	(b) Test wiring and replace or tape damaged wires.
LIGHTS BURN OUT FREQUENTLY	(a) High voltage regulator setting.	(a) Test and replace voltage regulator if necessary.
	(b) Loose connections in light circuit.	(b) Tighten connections.
LIGHTS WILL NOT LIGHT	(a) Discharged battery.	(a) Recharge battery and correct cause.
	(b) Loose connections in lighting circuit.	(b) Tighten connections.
	(c) Burned out lamps.	(c) Replace bulbs or sealed beam unit.
	(d) Open or corroded contacts in headlight switch.	(d) Replace headlight switch.
	(e) Open or corroded contact in dimmer switch.	(e) Replace dimmer switch.
HEADLIGHTS DIM (engine idling or shut off)	(a) Partly discharged battery.	(a) Charge battery.
	(b) Faulty battery.	(b) Test battery. Replace if necessary.
	(c) High resistance in light circuit.	(c) Test headlight circuit including ground connection. Make necessary repairs.
	(d) Faulty sealed beam units.	(d) Replace sealed beam units.
	(e) Corroded battery terminals.	(e) Clean terminals.

SERVICE PROCEDURES

PRE-AIMING INSTRUCTIONS

(1) Test dimmer switch operation.

(2) Observe operation of high beam indicator light mounted in instrument cluster.

(3) Inspect for badly rusted or faulty headlight assemblies. These conditions must be corrected before a satisfactory adjustment can be made.

(4) Place vehicle on a level floor.

(5) Adjust front suspension height as necessary.

(6) Inspect tire inflation.

(7) Rock vehicle sideways to allow vehicle to assume its normal position.

(8) If gasoline tank is not full, place a weight in trunk of vehicle to simulate weight of a full tank (6-1/2 pounds per gallon).

(9) There should be no other load in vehicle other than driver or substituted weight of approximately 150 pounds placed in driver's position.

(10) Remove each headlight trim panel. Do not remove sealed beam retainer rims.

(11) Thoroughly clean headlight lenses.

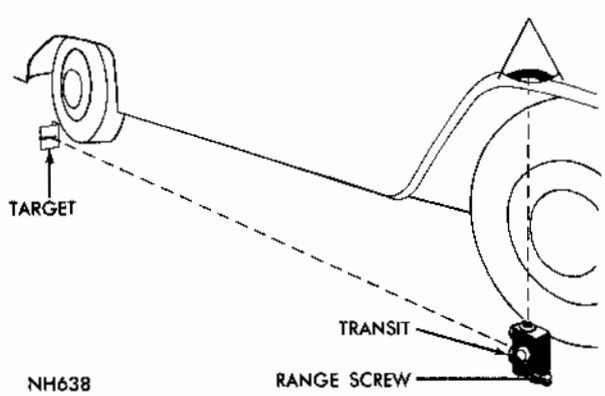

Fig. 1 - Determining Slope of Floor

COMPENSATING THE AIMERS

(1) Place transit on floor in line with vertical centerline of right front wheel (Fig. 1). Place split image target in like position at right rear wheel.

(2) Adjust range screw on transit until target split image coincides or merges into one unbroken line. **Make sure that the line of sight is perpendicular from the eye to the viewing port of the transit and that the target image is centered in viewing port of transit.**

(3) Turn dial on side of transit until bubble in spirit level is centered.

(4) When bubble is centered, note "plus" or "minus" reading on compensator scale. This figure indicates degree of slope of floor and must be transferred to each aimer.

MyMopar.com

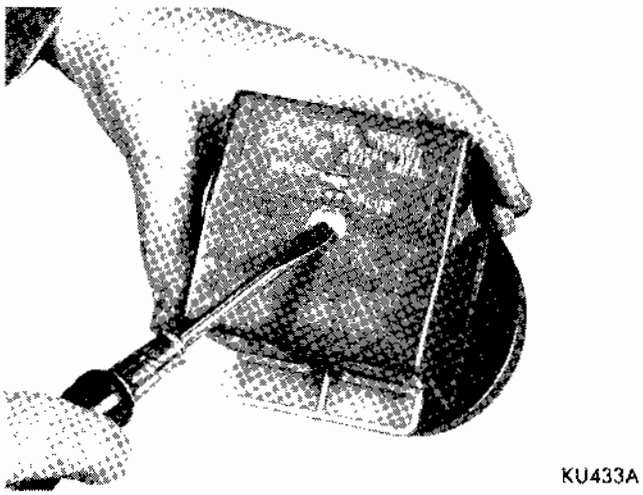

Fig. 2 - Adjusting Floor Level Compensators

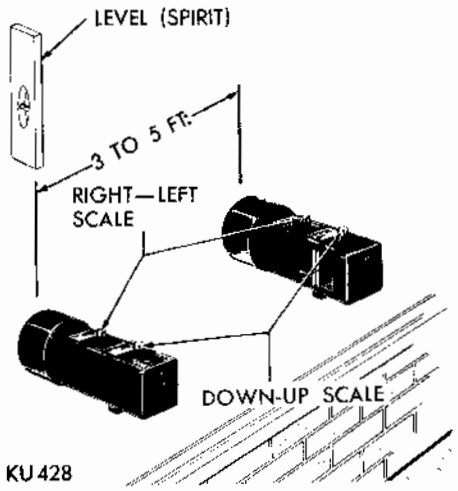

Fig. 3 - Checking Aimer Calibration

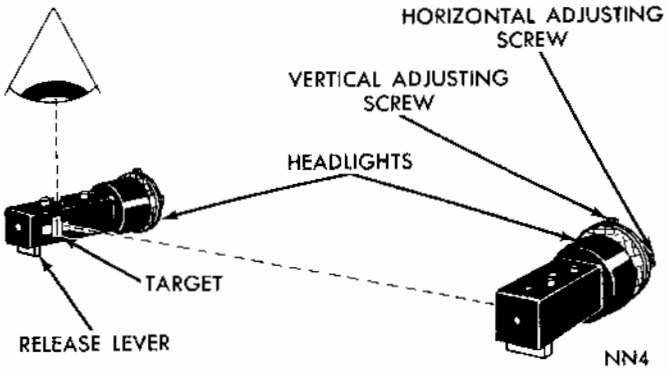

Fig. 4 - Mounting and Adjusting Aimers

(5) With a screw driver, turn adjusting slot of floor level compensator in each aimer, until correct plus or minus figure (or fractional part) appears in proper window, Fig. 2.

TESTING AIMER CALIBRATION (Fig. 3)

(1) Using carpenter or stone mason level of known accuracy, locate a true vertical plate glass window or smooth surface.

(2) Set **DOWN-UP** pointer on **DOWN 2**.

(3) Set **RIGHT-LEFT** pointer and floor level compensator at "0."

(4) Secure aimers to glass or smooth surface three to five feet apart so split image targets can be located in viewing ports.

(5) If bubble is centered in glass dial, vertical calibration is correct. If bubble is not centered, make **DOWN-UP** adjustment by rotating level adjusting screw until bubble is centered in spirit level.

(6) The horizontal aim is correct if targets on opposite aimers are aligned in viewing ports. If targets are not aligned in viewing ports, rotate mirror adjusting screw until target split image becomes aligned.

MOUNTING AND ADJUSTING THE AIMERS

(1) While holding an aimer in alignment with lens of one headlight on 2 headlamp models or the number (2) lens on 4 headlamp models, bring aimer up to and against headlight lens. **Make certain that headlight lens pads are making full contact with aimer mounting flange and that aimer target is facing inboard.**

(2) Push release lever forward (to expel air from suction cup) and while holding aimer firmly against headlight aiming pads, slowly pull release lever back until spring lock engages in the slot, (Fig. 4).

(3) Mount second aimer on other side of vehicle, in same manner.

(4) On each aimer, set pointer to numeral 2 on **DOWN** side of the **DOWN-UP** scale.

(5) On each aimer, position the pointer, of the **RIGHT-LEFT** scale, at **2-RIGHT.**

MEASURING HEADLIGHT AIM

Horizontal Test

Turn the **RIGHT-LEFT** scale knob until the split image is in alignment. If the **'RIGHT'** or **'LEFT' portion** of scale exceeds the following values, the lights should be aimed.

Values given represent inches at 25 feet.

	Left	Right
No. 1 Unit	4	4
No. 2 Unit	0	4

Vertical Test

Turn **'DOWN-UP'** scale knob until the spirit level is centered. If **'DOWN'** or **'UP'** portion of the scale exceeds the following values, the lights should be aimed.

No. 1 Unit	1/2 to 3-1/2 down
No. 2 Unit	1/2 to 3-1/2 down

MyMopar.com

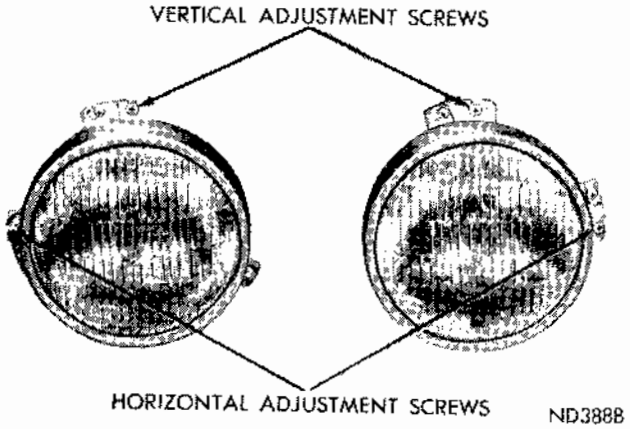

Fig. 5 - Headlight Adjusting Points

Horizontal Adjustment

(1) With pointer of **RIGHT-LEFT** scale still set **2-RIGHT**, sight through aimer viewing port. **Make sure that line of sight is perpendicular from eye to viewing port of aimer and that target image is centered in viewing port of aimer.**

(2) While sighting through viewing port of aimer, turn horizontal adjusting screw on headlight until split target image line merges into one unbroken line. To remove backlash, be sure to make a final adjustment by turning headlight horizontal adjusting screw in a clockwise direction, (Fig. 5).

(3) Make horizontal adjustment on other side of vehicle in same manner.

Vertical Adjustment

(1) Turn vertical adjusting screw on headlight in counterclockwise direction to bring bubble of spirit level on aimer to vehicle side of center. Use care to avoid disturbing installed position of aimers. Then turn screw clockwise until bubble is centered for correct aim and elimination of backlash.

(2) Make vertical adjustment on other side of vehicle in same manner.

(3) Inspect target alignment on each side and readjust the horizontal aim, if necessary.

Proceed to adjust number (1) bulbs on dual headlight systems by repeating outlined procedure. **Remove aimers by releasing spring lock at rear (bottom) of aimer and pushing release level forward. Do not attempt to remove the aimers by pulling away from headlight lens—slide suction cup downward and away from lens.**

(4) Install headlight trim panels.

SEALED BEAM REPLACEMENT

(ALL MODELS)

The lens, filament and reflector are sealed into one unit which can be removed as follows:

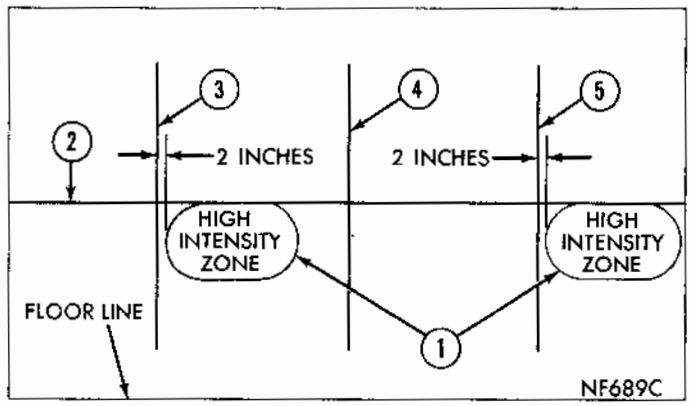

Fig. 6 - Low Beam Adjustment Pattern

(1) Remove screws from headlight bezel and remove bezel.

(2) Remove screws from interior retaining ring, and remove ring. **Do not disturb headlight aimer screws.**

(3) Pull out sealed beam unit and unplug connector, pulling straight off.

(4) Install new sealed beam unit.

(5) Install unit retaining ring.

(6) Aim the headlight and install headlight bezel.

VISUAL HEADLIGHT ADJUSTMENT

Low Beam

Place vehicle on a known level floor 25 feet from aiming screen or light colored wall.

Four lines are required on screen or wall (Fig. 6).

(a) A horizontal line at the level of centers of headlights, number 2.

(b) A center vertical line which must be lined up with center of hood, number 4.

(c) A vertical line on left of screen or wall in line with center line of left headlight, number 3.

(d) A vertical line on right of screen or wall in line with center line of right headlight, number 5.

Remove headlight door. Adjust top adjusting screw for vertical adjustment, adjust side screw for horizontal adjustment. (See Fig. 5.)

Adjust low beam of headlights to match the patterns in Figure 6 and the corresponding numbers listed below:

(1) Lower beam pattern of both headlights.

(2) Horizontal line at level of headlight centers.

(3) Vertical line in line with center of left headlight.

(4) Vertical line in line with center of hood.

(5) Vertical line in line with center of right headlight.

High Beam

Adjust high beam of headlights to match the patterns in Figure 7 and the corresponding num-

MyMopar.com

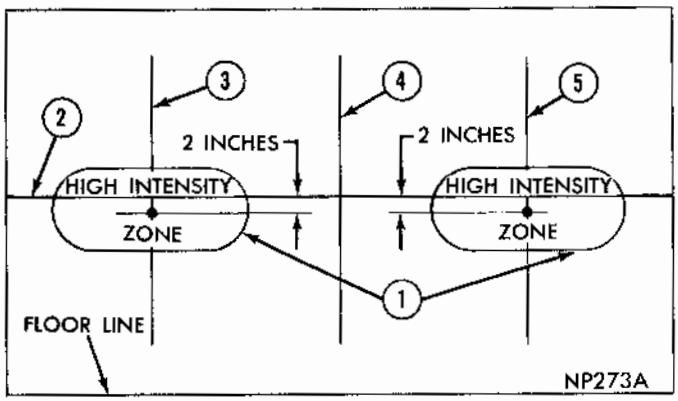

Fig 7 - High Beam Adjustment Pattern

bers listed below:

(1) High beam pattern of both headlights.

(2) Horizontal line at level of headlight centers.

(3) Vertical line in line with center of left headlight.

(4) Vertical line in line with center of hood.

(5) Vertical line in line with center of right headlight.

FRONT END LIGHTING

(EXCEPT HEADLIGHTS)

GENERAL INFORMATION

A good ground is mandatory for proper light operation. This is provided through the lamp socket to housing to the vehicle in most cases. However, in some installations the housing may be placed in a plastic part so that an added ground wire is necessary. It is important to have this wire securely connected to a good ground.

When changing bulbs check socket for corrosion. If corrosion is present clean it off with a wire brush and coat the socket lightly with any good multi-purpose grease.

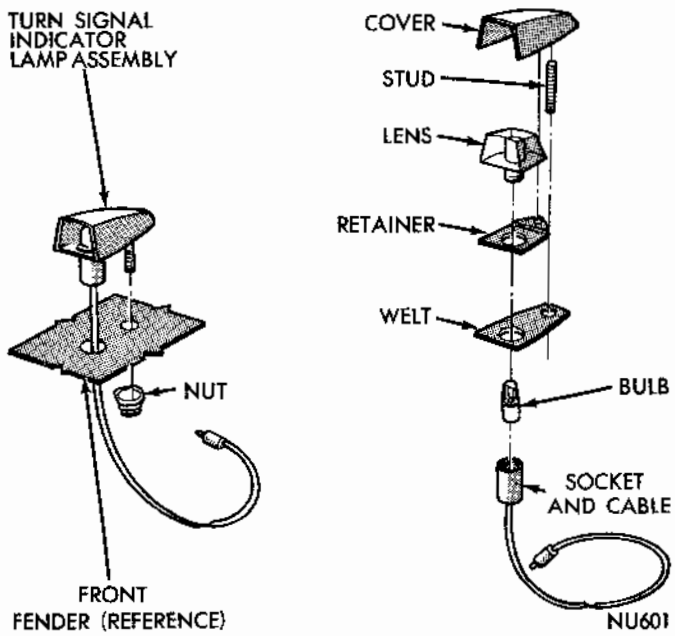

Fig. 1 - Front Fender Turn Signal Indicator Lamp - Dart - Coronet - Charger and Dodge

Front Fender Turn Signal Indicator Lamp - Dart, Coronet, Charger, Dodge (Fig. 1).

Removal:-

(1) From under front fender remove one capnut attaching lamp to fender.

(2) Disconnect lamp lead from harness and lift lamp assembly off.

To replace bulb, unscrew lamp socket from lens and lift out bulb.

Installation:-

(1) Pass lamp lead through fender and position lamp on fender.

(2) Install attaching nut and connect lamp lead to harness.

Front Fender Turn Signal Indictor Lamp - Challenger (FIG. 2).

Removal:-

(1) From under fender remove one screw attaching lamp assembly to housing through fender.

(2) Disconnect lamp lead and remove lamp assembly.

To replace bulb, unscrew lamp socket from lens and lift out bulb.

Installation:-

(1) Position lens assembly under fender and install attaching screw.

(2) Connect lamp lead to harness.

Front Park and Turn Signal Lamps - Dart (Fig. 3)

MyMopar.com

Removal:-

(1) Remove four screws attaching lens to grille.

(2) Remove bulb and from behind grille remove two screws attaching lamp socket assembly.

(3) Disconnect lamp lead (two) and remove leads.

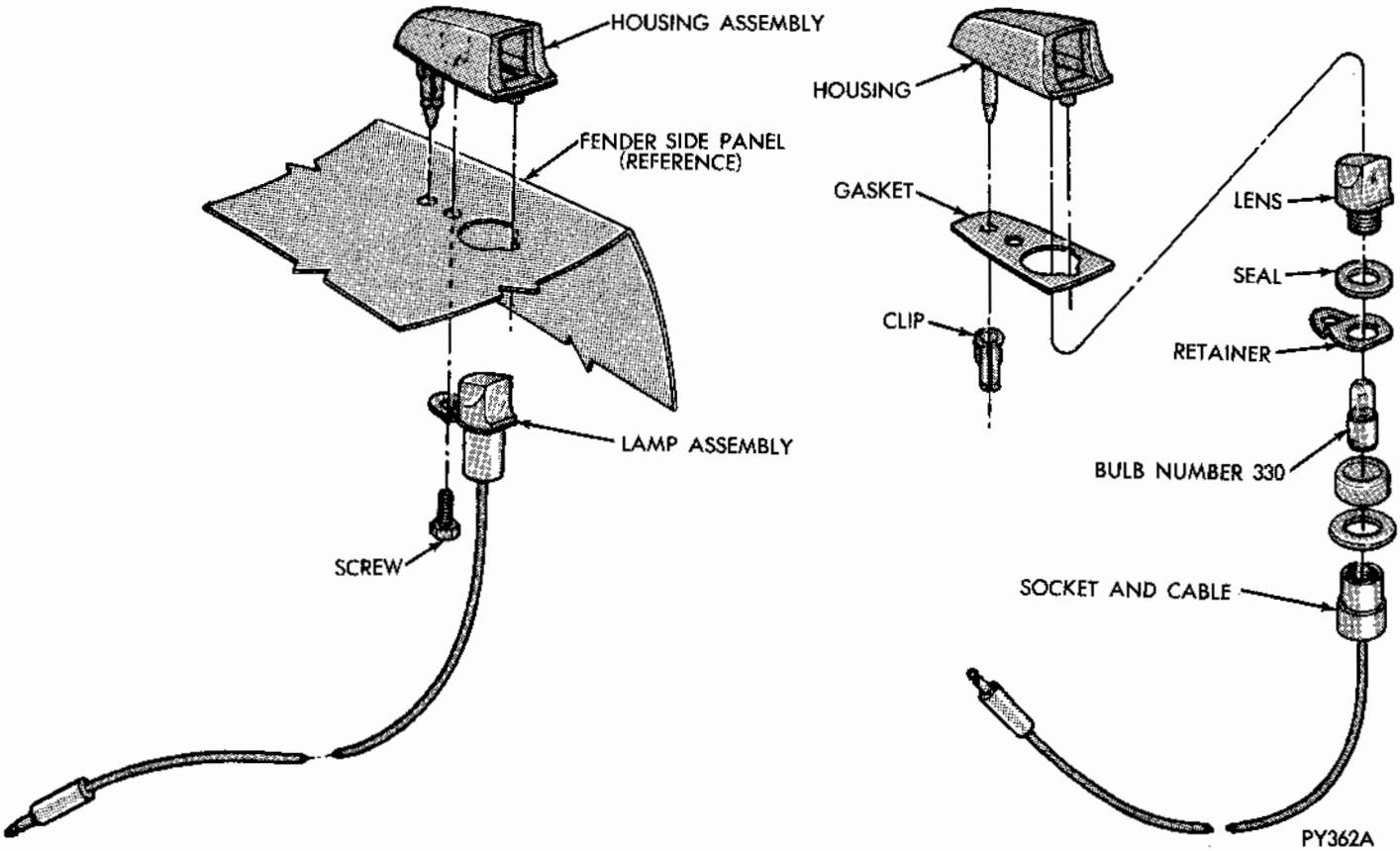

Fig 2 - Front Fender Turn Signal Indicator Lamp - Challenger

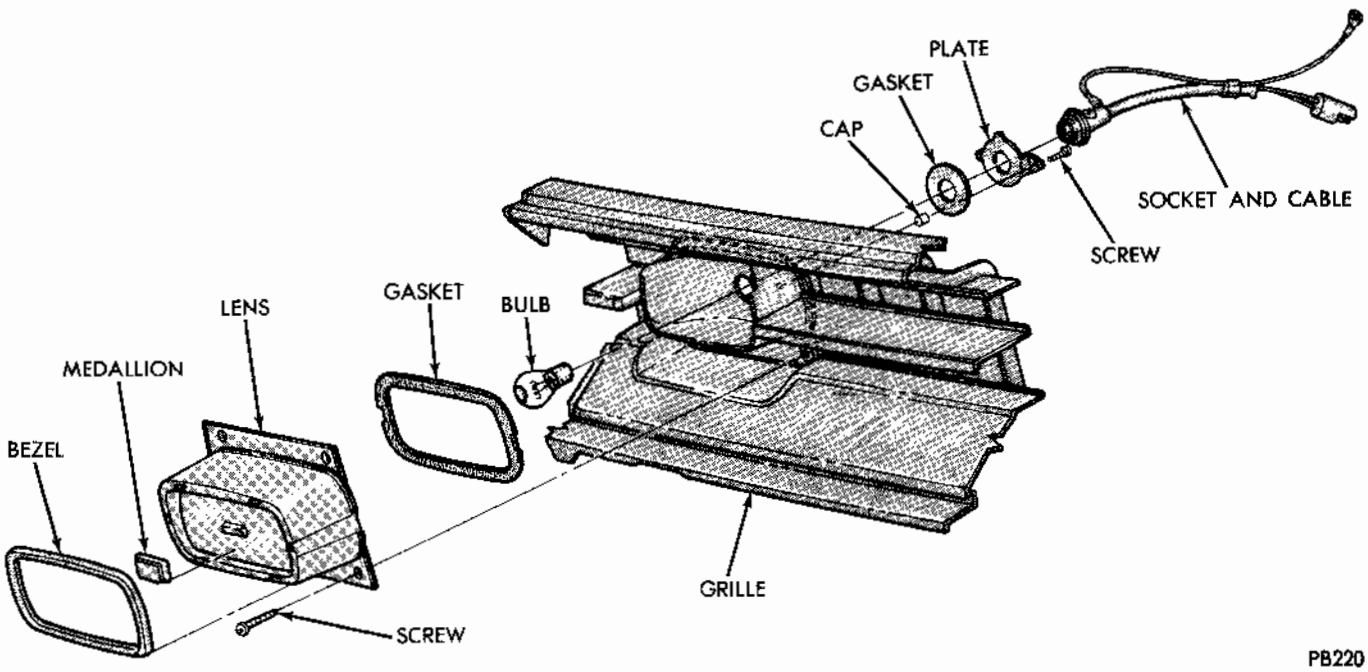

Fig. 3 - Front Park and Turn Signal Lamps Dart

MyMopar.com

Installation:-

(1) Position socket assembly to back of grille and install two attaching screws.

(2) Position lens assembly to front of grille and install four attaching screws.

Front Park and Turn Signal Lamp - Challenger (Fig. 4).

Removal:-

(1) Disconnect lamp lead from harness under air shield.

(2) Remove three screws attaching lamp to shield and remove lamp assembly.

To replace lens or bulbs, remove two lens attaching screws and lift off lens.

Installation:-

(1) Position assembly in opening and install three attaching screws.

(2) Connect lamp lead to harness.

Front Park and Turn Signal Lamps - Charger (Fig. 5).

Removal:-

(1) Disconnect lamp lead from harness.

(2) Remove three screws attaching lamp assembly to bumper and remove assembly from behind bumper.

To replace lens and bulbs, remove two lens attaching screws and lift off lens.

Installation:-

(1) Position lamp assembly behind bumper and install three mounting screws.

(2) Connect lamp lead to harness.

Front Park and Turn Signal Lamps - Coronet (Fig. 6).

Removal:-

(1) Remove three screws attaching bracket to stone shield.

(2) Disconnect lamp lead and remove assembly.

To replace lens or bulb, remove two lens attaching screws from face of lens and lift off lens.

Installation:-

(1) Position lamp assembly to back of stone shield and install three mounting screws.

(2) Connect lamp lead to harness.

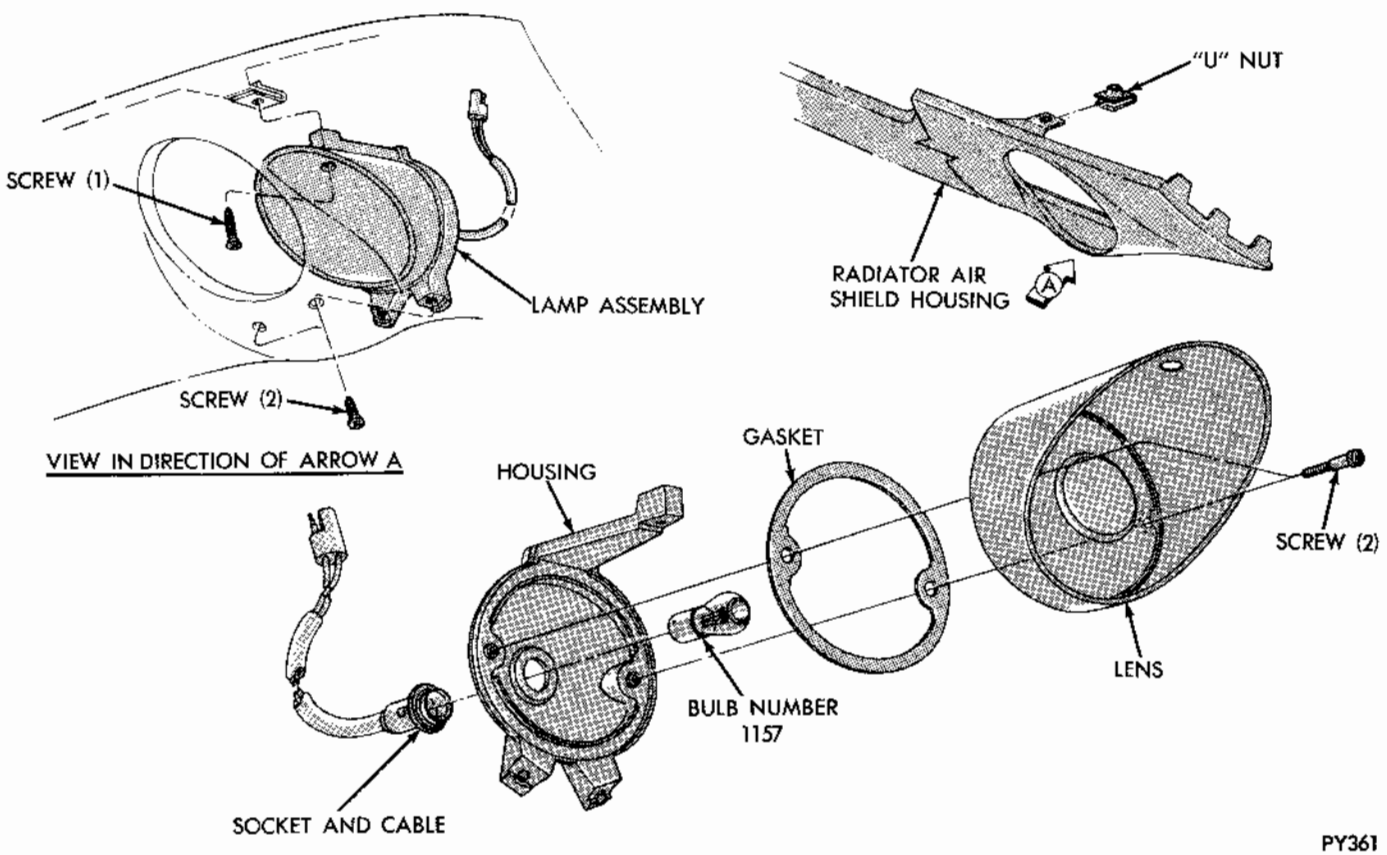

Fig. 4 - Front Park and Turn Signal Lamp - Challenger

MyMopar.com

Front Park and Turn Signal Lamps - Polara/Monaco (Fig. 7).

Removal:-

(1) Disconnect lamp lead from harness.

(2) Remove two screws attaching bracket to bumper working from rear of bumper and lift out lamp assembly.

To replace bulbs, remove two lens attaching screws from face of lens and lift off lens.

Installation:-

(1) Position lamp assembly to back of bumper and install two attaching screws.

(2) Connect lamp lead to harness.

Side Marker Lamps and Reflectors - Dart (Fig. 8)

Note: Lens color constitutes the only difference in front and rear side markers on Dart.

Removal:-

(1) Disconnect lamp lead from harness under fender.

(2) Remove two capnuts and pull lamp assembly away from fender.

To replace lens or bulb, remove two screws from back of housing that attach lens and lift off lens.

Installation:-

(1) Enter lamp assembly into fender opening, index with bracket, and install two capnuts.

Connect lamp lead to harness.

Front Fender Side Marker Lamp - Challenger (Fig. 9).

Removal:-

(1) Working under fender, disconnect lamp lead from harness and remove two capnuts attaching lamp assembly to bracket.

(2) Lift lamp assembly away from outside of fender and bracket from inside.

To replace lens or bulb, remove two screws from back of housing that attach lens.

Installation:-

(1) Position lamp assembly in fender opening, index to bracket and install two capnuts.

(2) Connect lamp lead to harness.

Side Marker Lamps - Coronet/Charger (Fig. 10).

Note: Color of lens is the only difference between front and rear side markers.

Removal:-

(1) Disconnect socket and bulb from lamp.

(2) Working under fender, remove four capnuts from bezel studs.

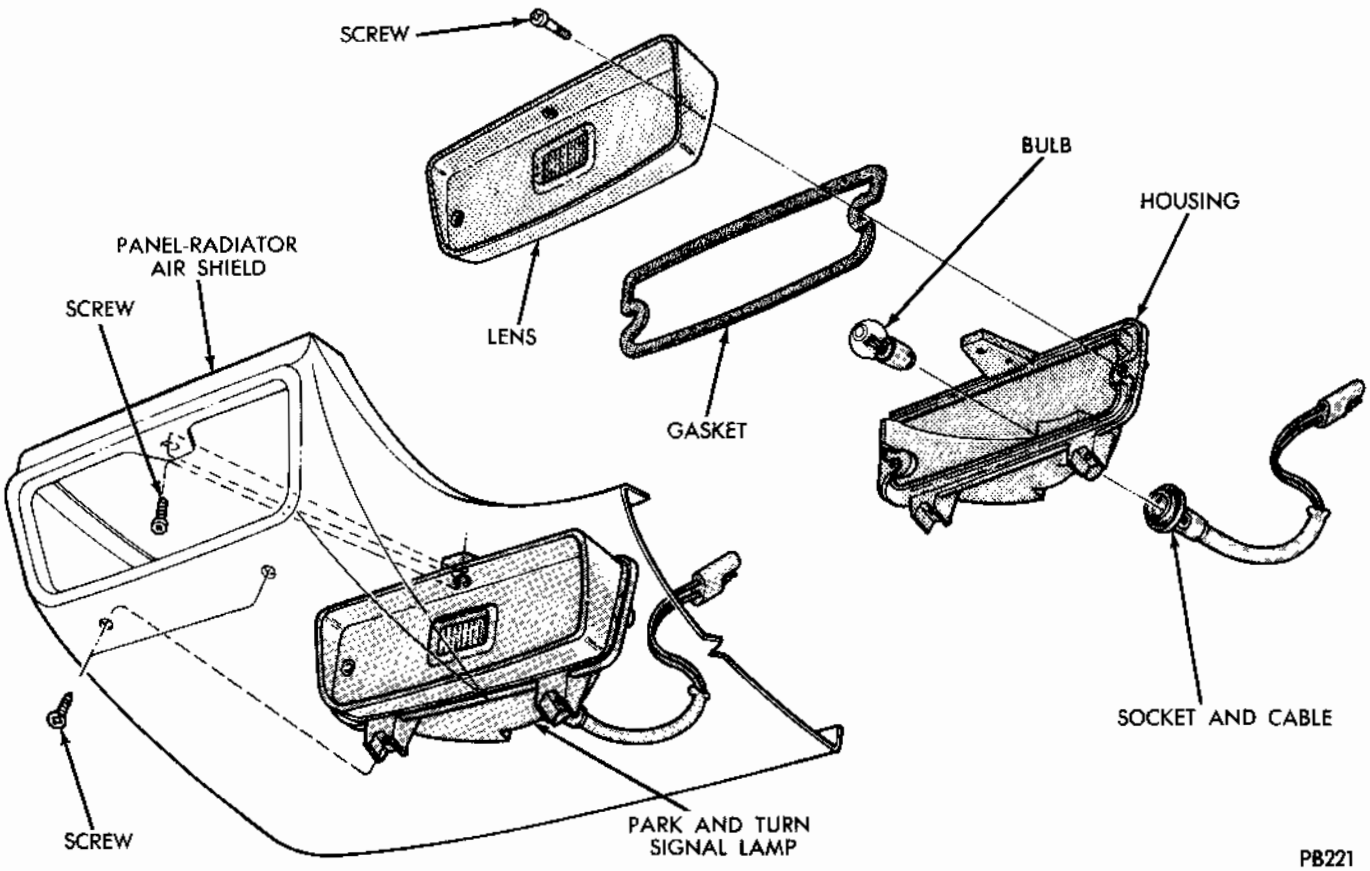

Fig. 5 - Front Park and Turn Signal - Charger

MyMopar.com

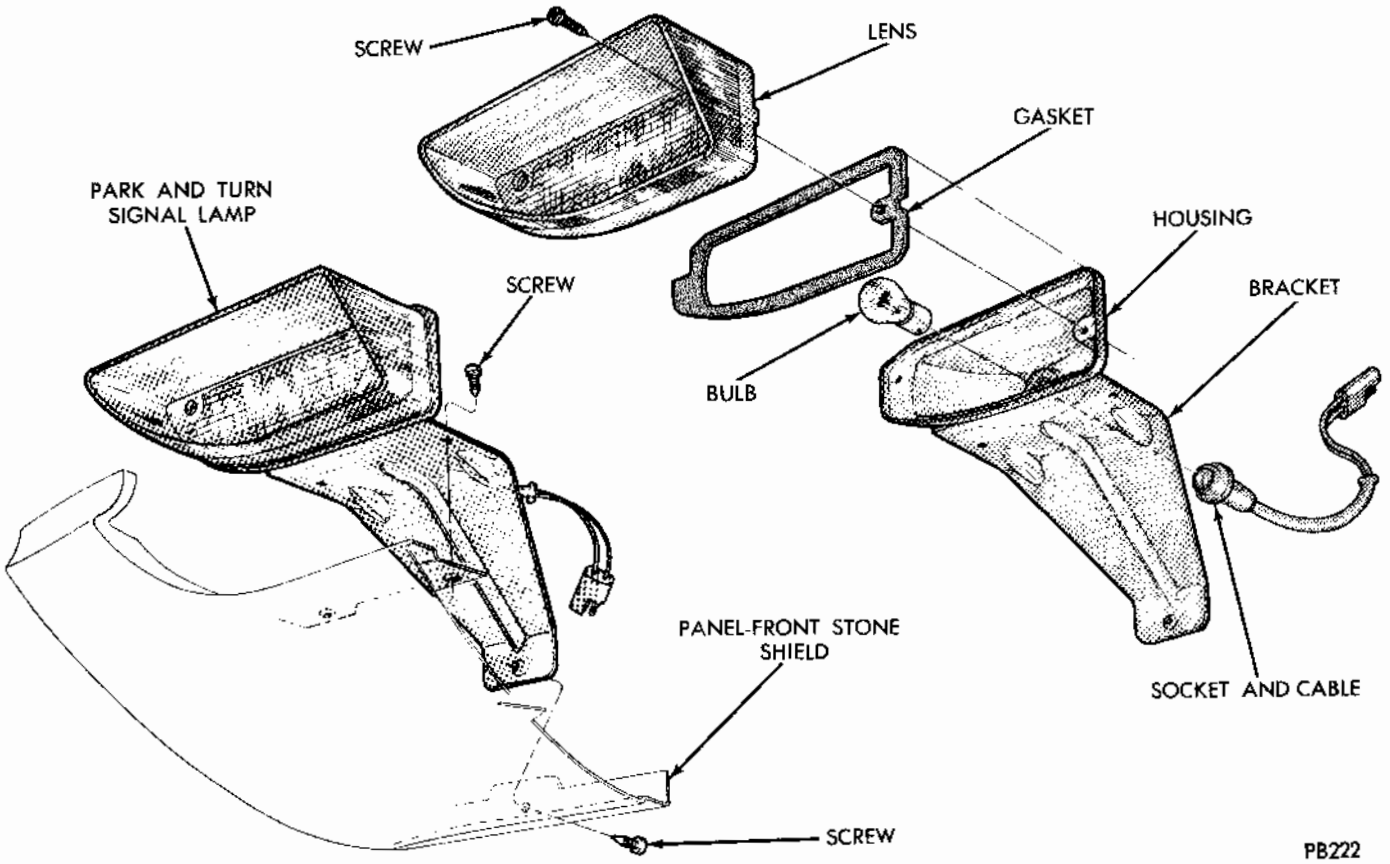

Fig. 6 - Front Park and Turn Signal Lamps Coronet

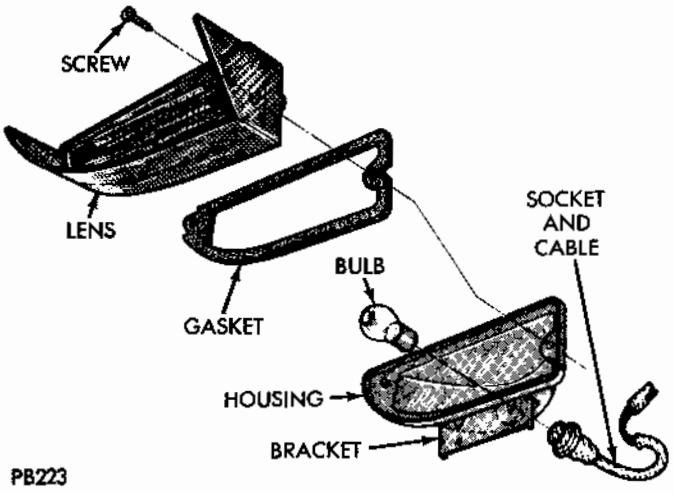

Fig. 7 - Front Park and Turn Signal Lamps - Polara/Monaco

(3) Lift bezel from outside of fender and lamp assembly from inside.

To replace bulbs, twist out socket and pull bulb out of socket.

Installation:-

(1) Position bezel and welt to outside of fender and lamp assembly on bezel studs from inside fender and install four capnuts.

(2) Connect lamp socket lead to housing.

Front Side Marker Lamps - Polara/Monaco (Fig. 11).

Removal:-

(1) Disconnect lamp lead from harness and remove two capnuts working under bumper.

(2) Remove lamp assembly and bracket.

To replace lens or bulbs, remove two lens attaching screws from face of lens while mounted on vehicle.

Installation:-

(1) Position lamp assembly and bracket to bumper and install two capnuts.

(2) Connect lamp lead to harness.

Front Fender Cornering Lamps - Polara/Monaco (Fig. 12).

Removal:-

(1) From under fender remove two capnuts attaching housing and bezel.

(2) Disconnect lamp lead from harness and remove lamp and bezel.

To replace lens or bulbs remove two screws mounting lens to housing after removal from vehicle.

Installation:-

(1) Position bezel and welt to outside of fender and lamp assembly to inside.

(2) Install two capnuts and connect lead to harness.

MyMopar.com

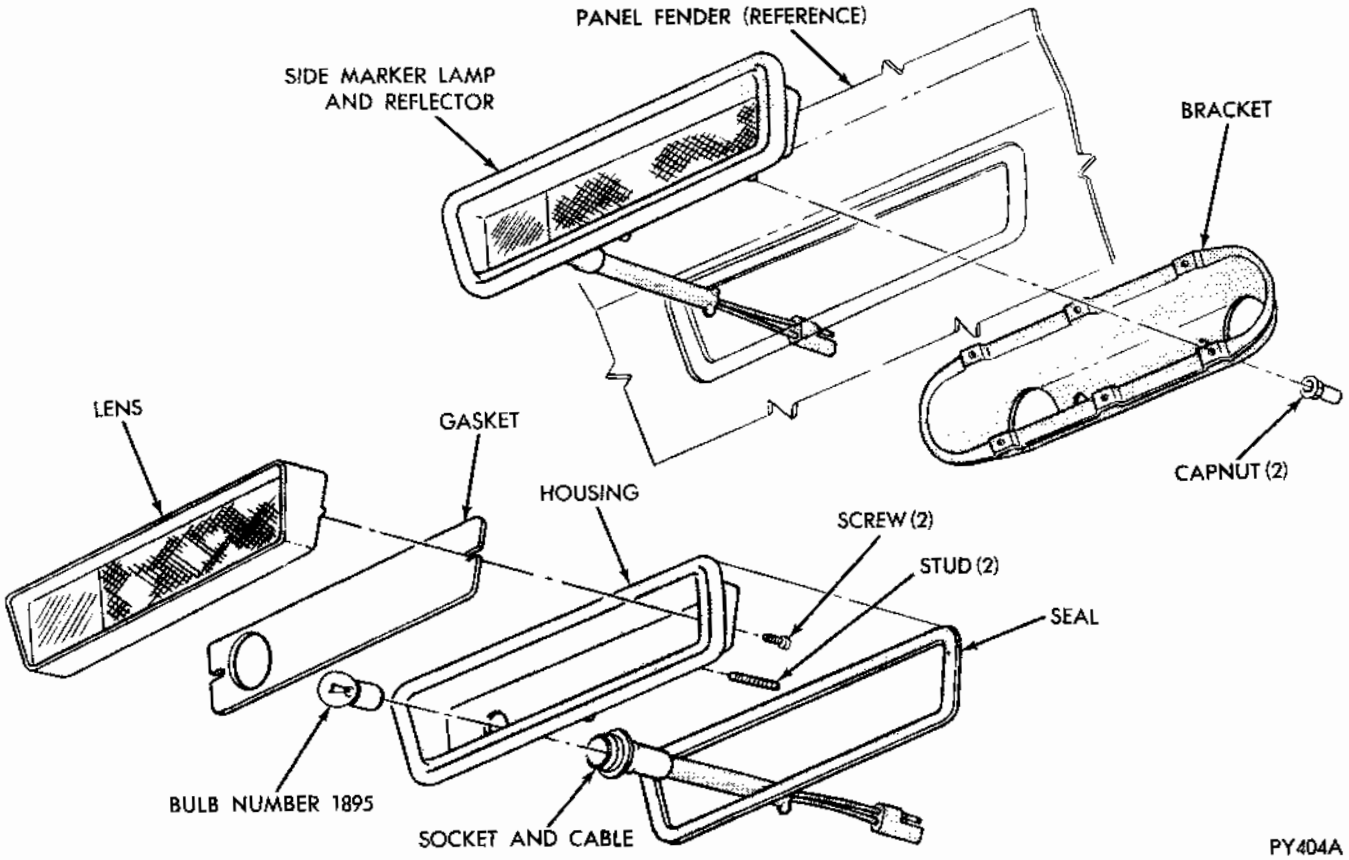

Fig. 8 - Front Side Marker Lamp and Reflector Dart

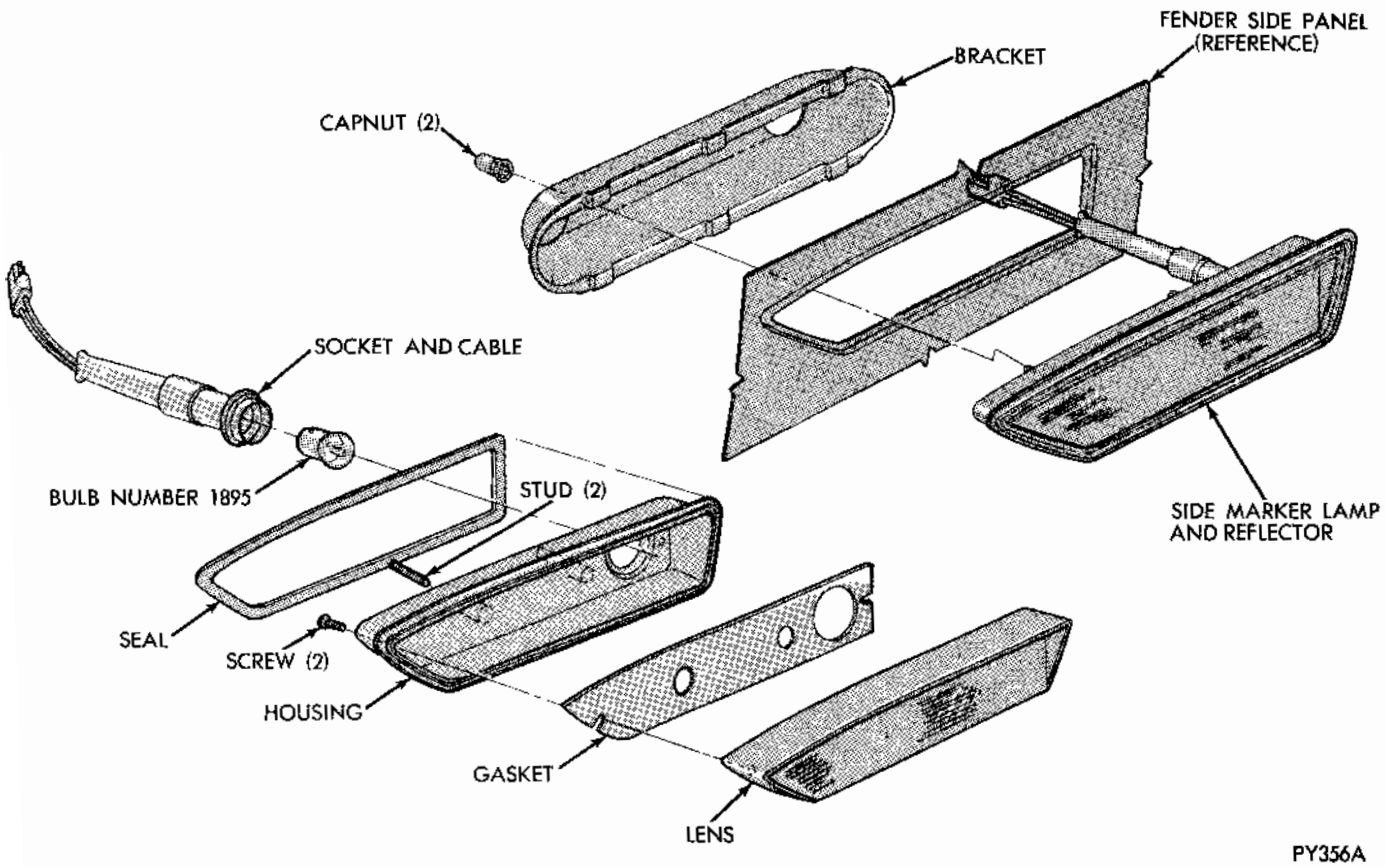

Fig 9 - Front Side Marker Lamp - Challenger

MyMopar.com

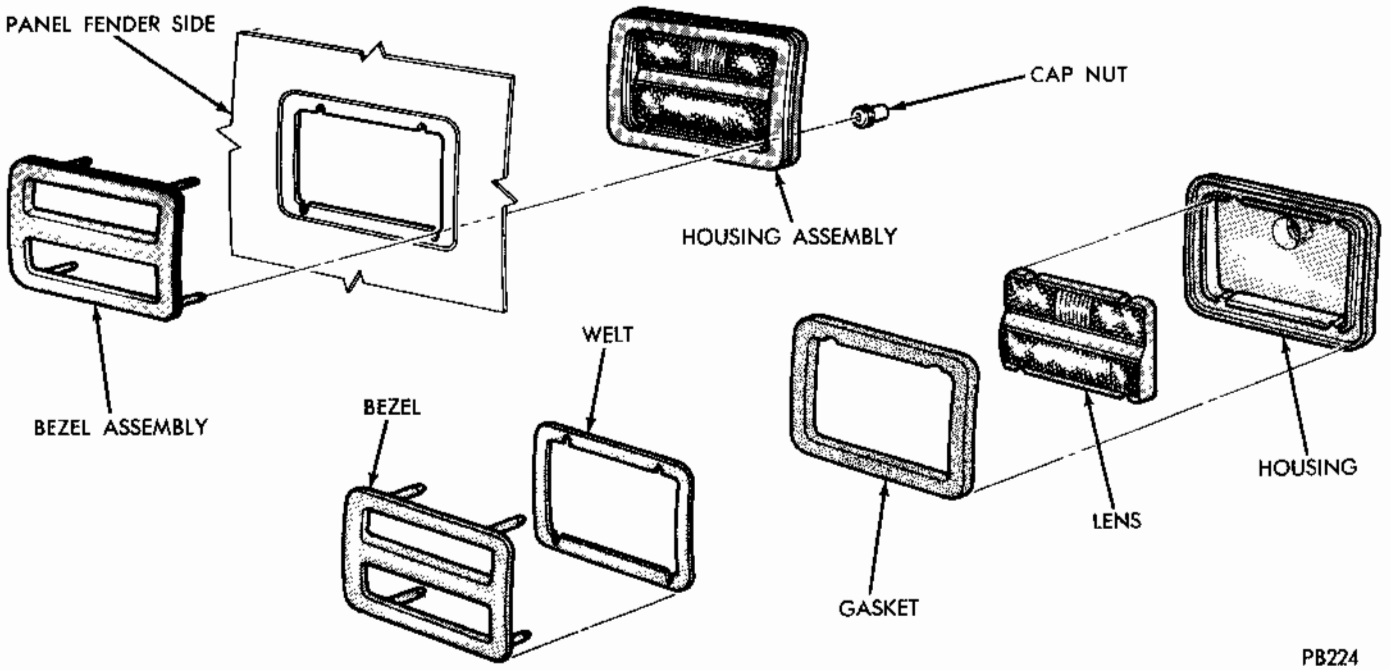

Fig. 10 - Front Side Marker Lamps Coronet/Charger

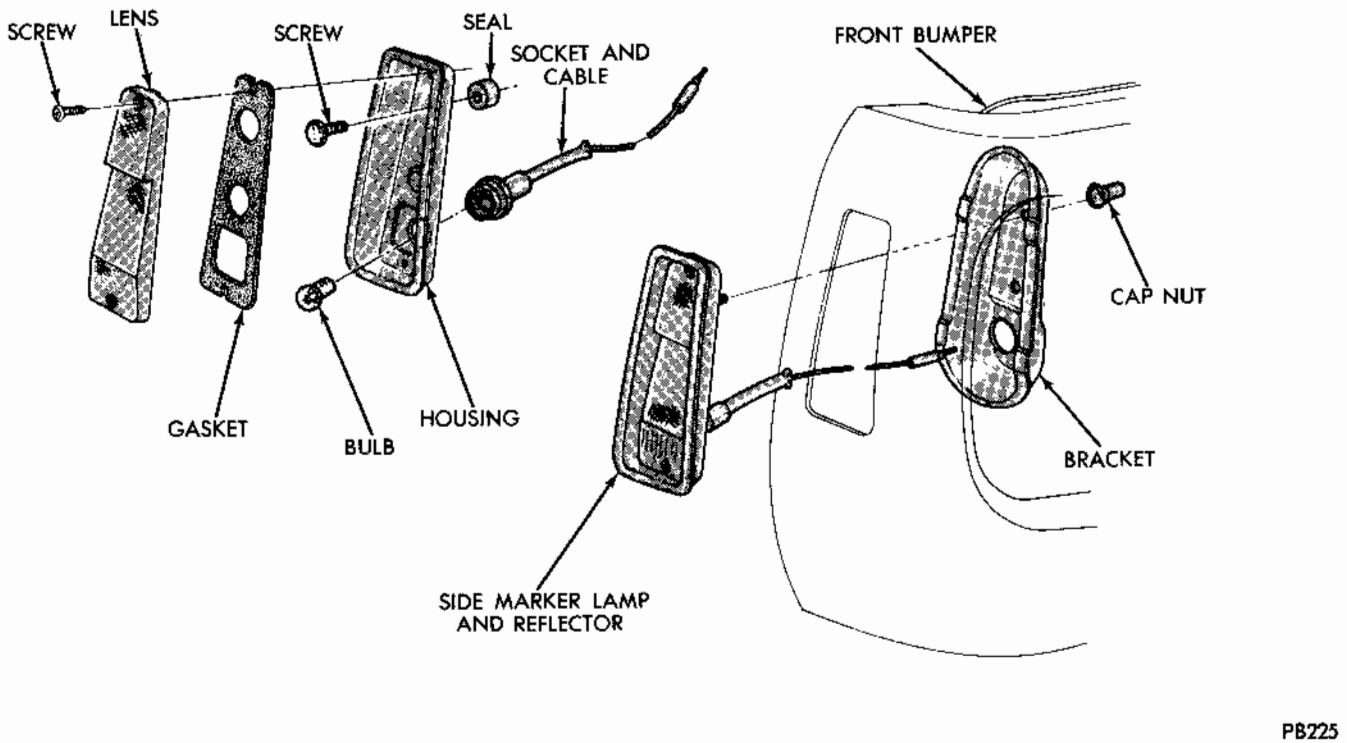

Fig. 11 - Front Side Marker Lamps Polara/Monaco

MyMopar.com

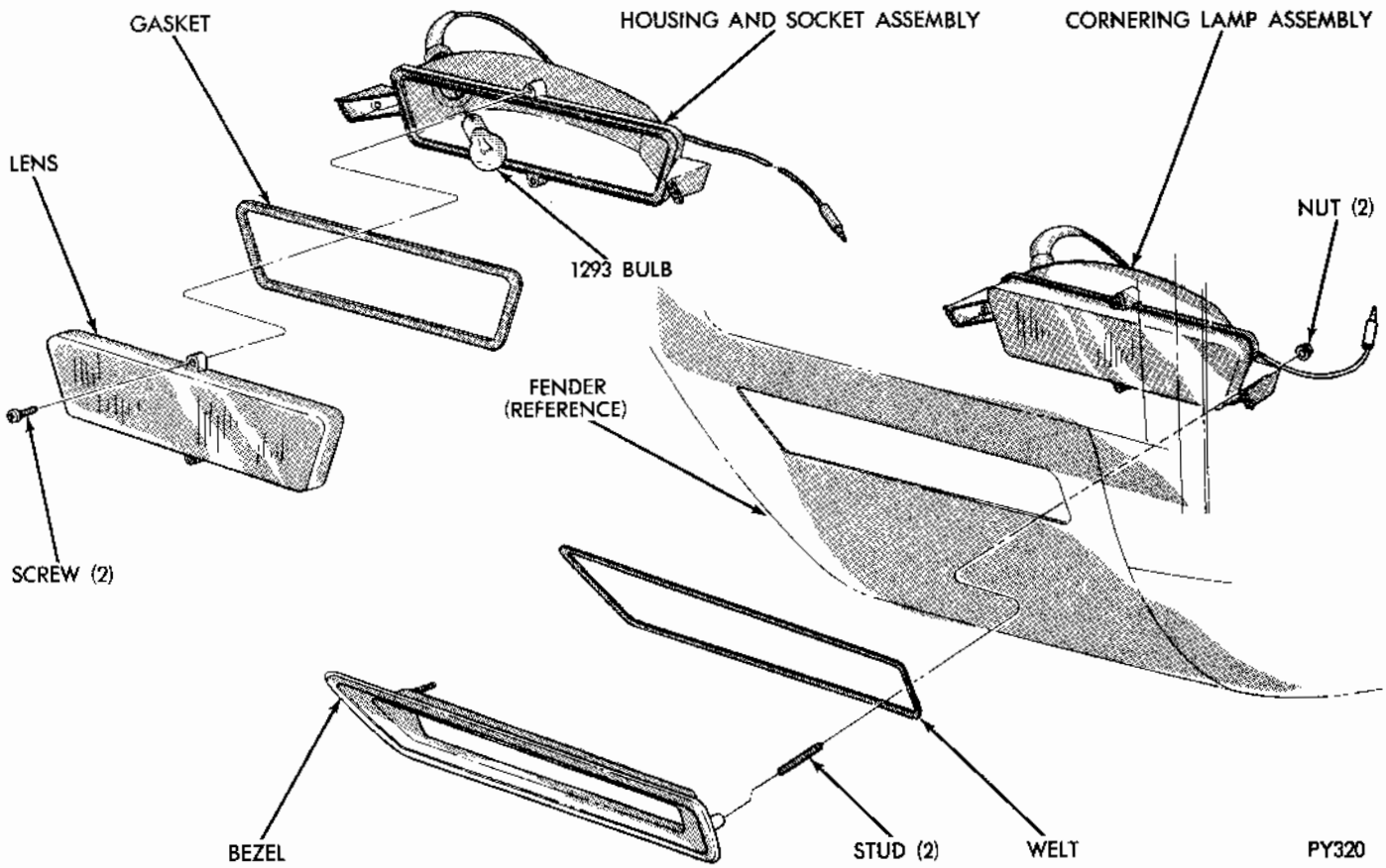

Fig. 12 - Front Fender Cornering Lamps Polara/Monaco

Exterior Lighting-Rear End Lighting

Rear Side Marker Lamps-Challenger (Fig. 1)

Removal:-

(1) Working in trunk compartment remove two capnuts.

(2) Remove lamp socket, lamp bracket and lamp.

To replace lens, remove two screws from back of housing that attach lens.

Installation:-

(1) Position seal and lamp on quarter panel.

(2) Install bracket, two capnuts and socket.

Rear Side Marker Lamp-Polara/Monaco (Fig. 2).

Removal:-

(1) Working under bumper disconnect lamp lead from harness, remove two capnuts and lift off lamp assembly.

To replace lens or bulbs, remove two screws attaching lens to housing from lens face and lift off lens.

Installation:-

(1) Position lamp assembly on bumper and install two capnuts.

(2) Connect lamp lead to harness.

Tail, Stop, Turn Signal and Back-Up Lamps-Dart (Fig. 3).

Removal:-

(1) Remove two screws attaching lamp assembly to bumper.

(2) Disconnect lamp lead from harness and lift out lamp assembly.

To change lens or bulbs remove two attaching screws from face of lens and lift off lens.

Tail, Stop, Turn Signal and Back-Up Lamps-Swinger (Fig. 4).

Removal:-

(1) Working inside trunk compartment, pull out bulb sockets and remove four screws attaching lamp assembly to lower deck.

(2) Lift out lamp assembly.

To replace lens, after steps 1 and 2 above remove six screws attaching lens to housing.

Installation:-

(1) Position lamp assembly to lower deck using positioning pins on housing and install four screws.

(2) Push bulb sockets into proper openings.

MyMopar.com

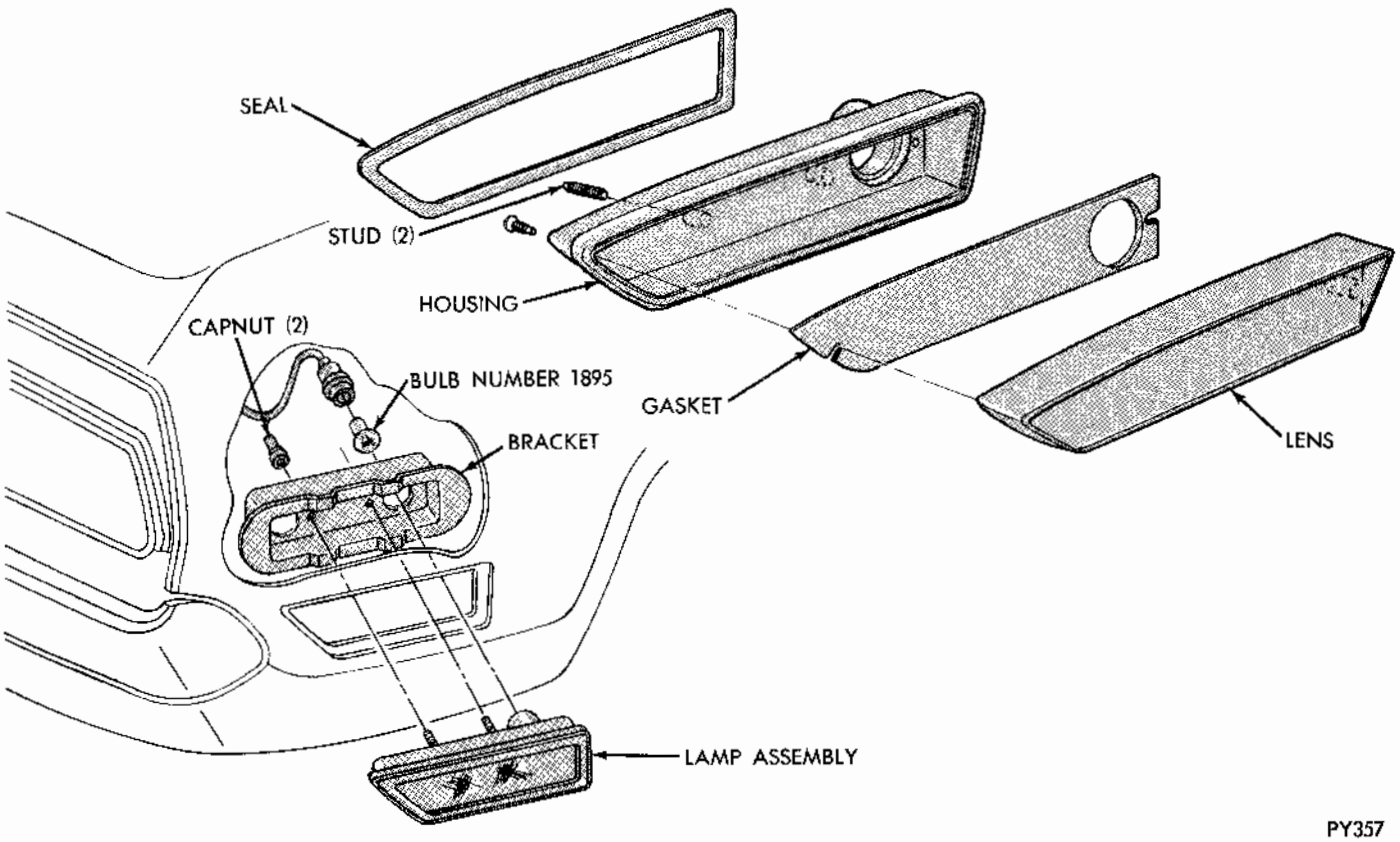

Fig. 1 - Rear Side Marker Lamps - Challenger

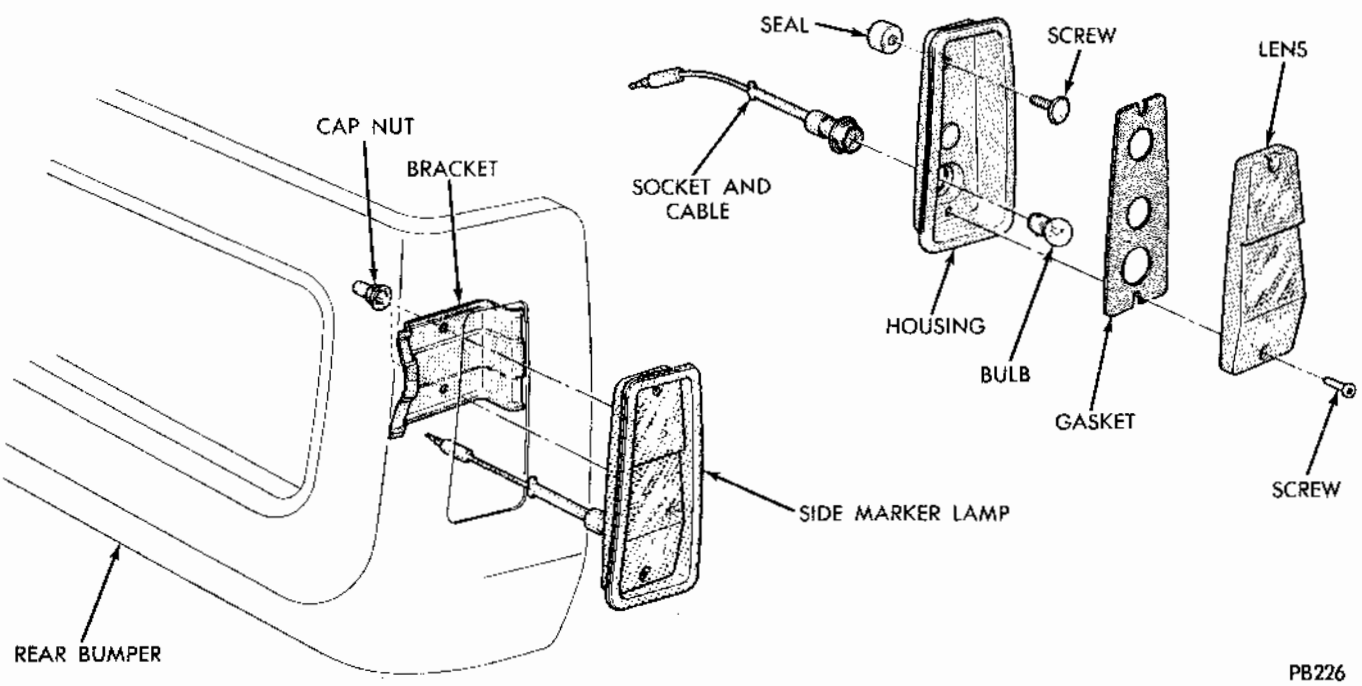

Fig. 2 - Rear Side Marker Lamps Polara/Monaco

MyMopar.com

To replace lens or bulb, remove four screws from back of housing and lift off lens.

Installation:-

(1) Connect lamp lead to harness.

(2) Position lamp assembly and bezel to quarter panel and install four attaching screws.

Back-up Lamps-Polara/Monaco Station Wagons (Fig. 14).

Removal:-

(1) To replace lens or bulbs, remove retainer and lens.

(2) Remove two screws attaching housing to bumper and disconnect lamp lead.

Rear License Lamp-Dart/Challenger (Fig. 15).

Removal:-

(1) Remove two screws attaching lamp assembly to bumper lift out housing and disconnect lamp lead from harness.

To replace lens or bulb, remove two screws from face of lens and lift off lens.

Rear License Lamp-Coronet/Charger and Polara/Monaco (Fig. 16).

Removal:-

(1) Remove two screws attaching bracket to bumper.

(2) Remove lamp assembly and disconnect lamp lead from harness.

To replace lens and bulb remove two screws that attach them to bracket.

Installation:-

(1) Connect lead to harness.

(2) Position lamp and bracket assembly to bumper and install two attaching screws.

Rear License Lamps-Polara/Monaco Station Wagons (Fig. 17).

Removal:-

(1) Snap lens out of socket to remove and snap socket out of bumper.

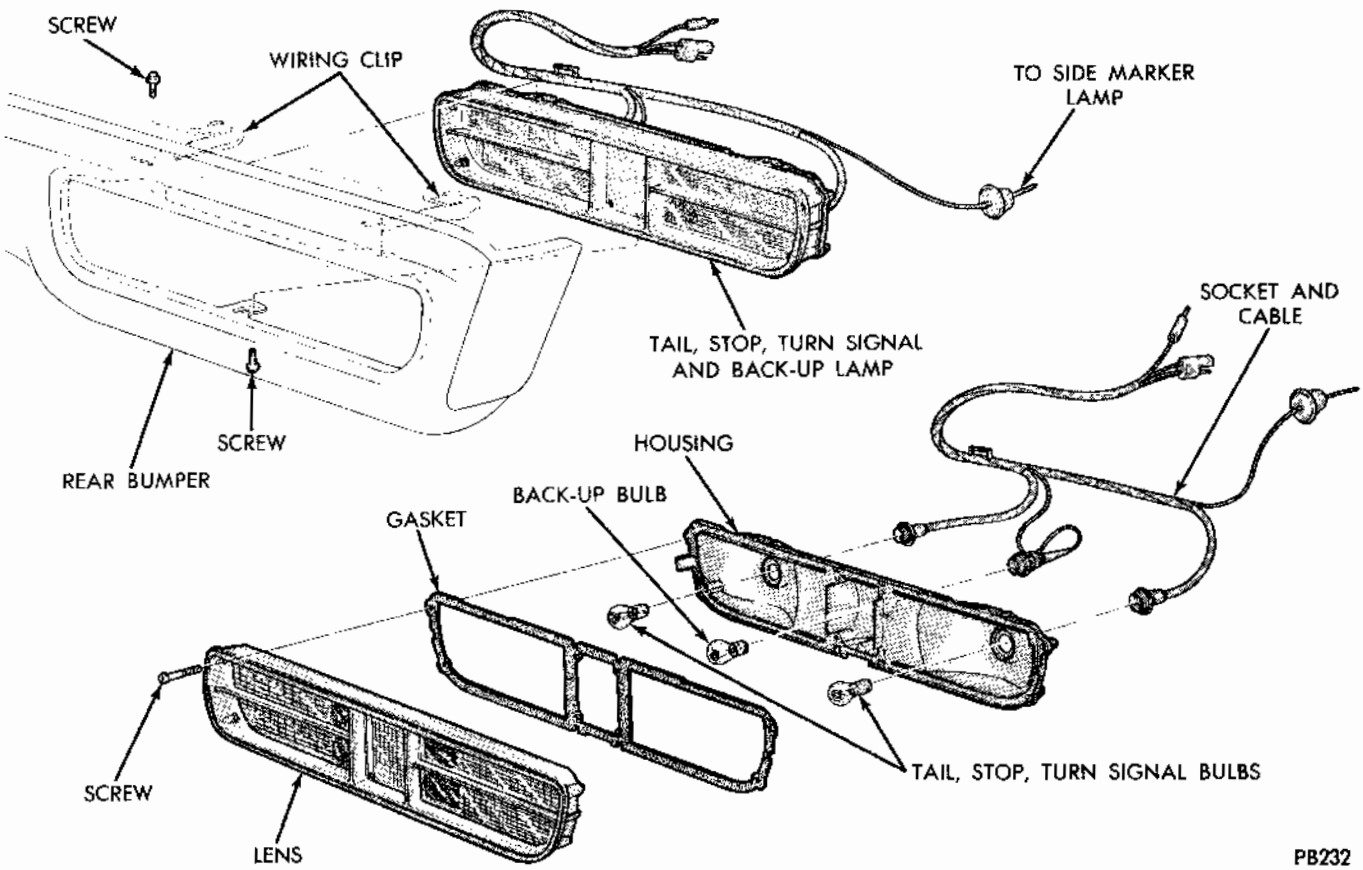

Fig. 8 - Tail, Stop, Turn Signal and Back-Up Lamps - Coronet

MyMopar.com

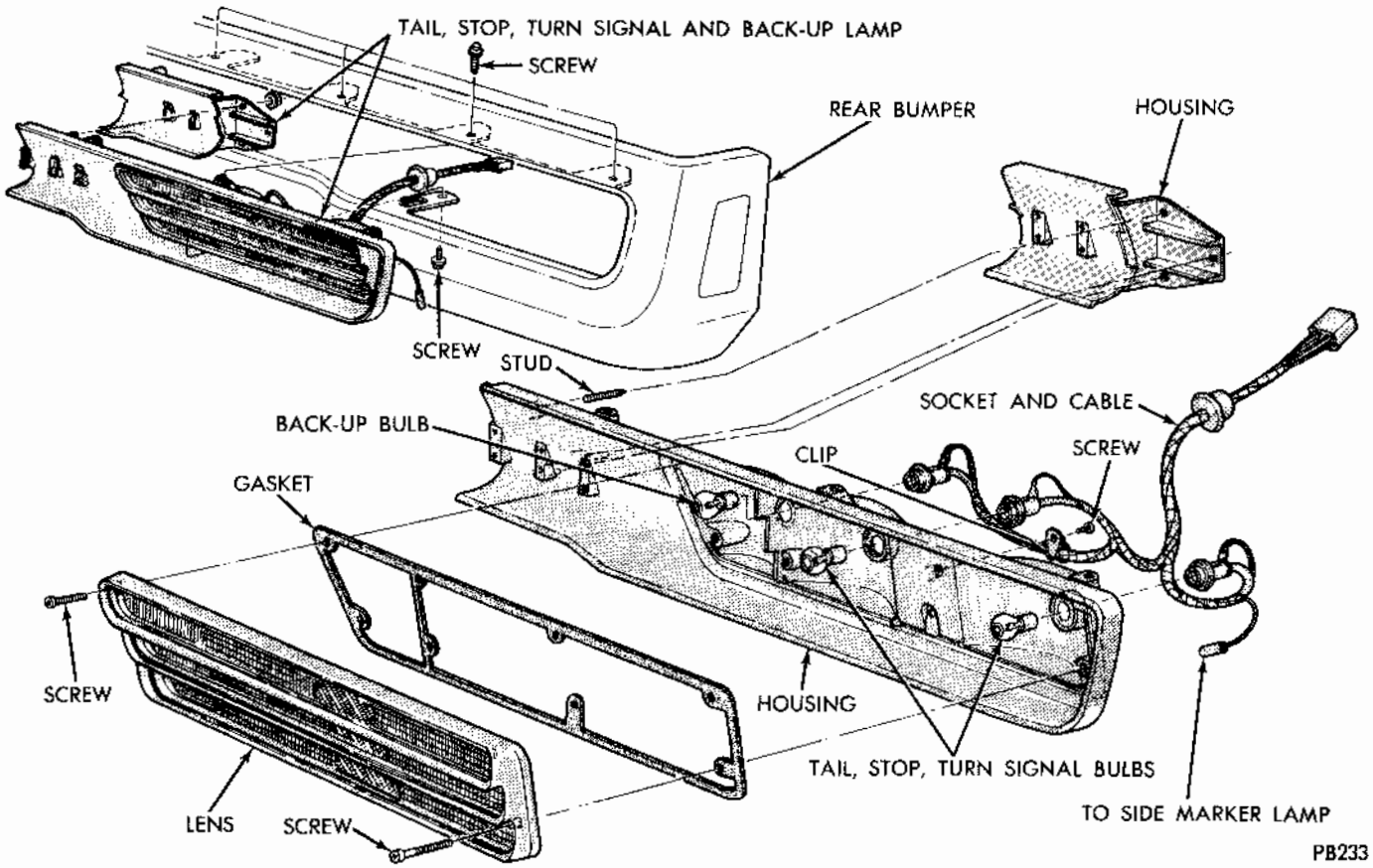

Fig. 9 - Tail, Stop, Turn Signal and Back-Up Lamps - Polara

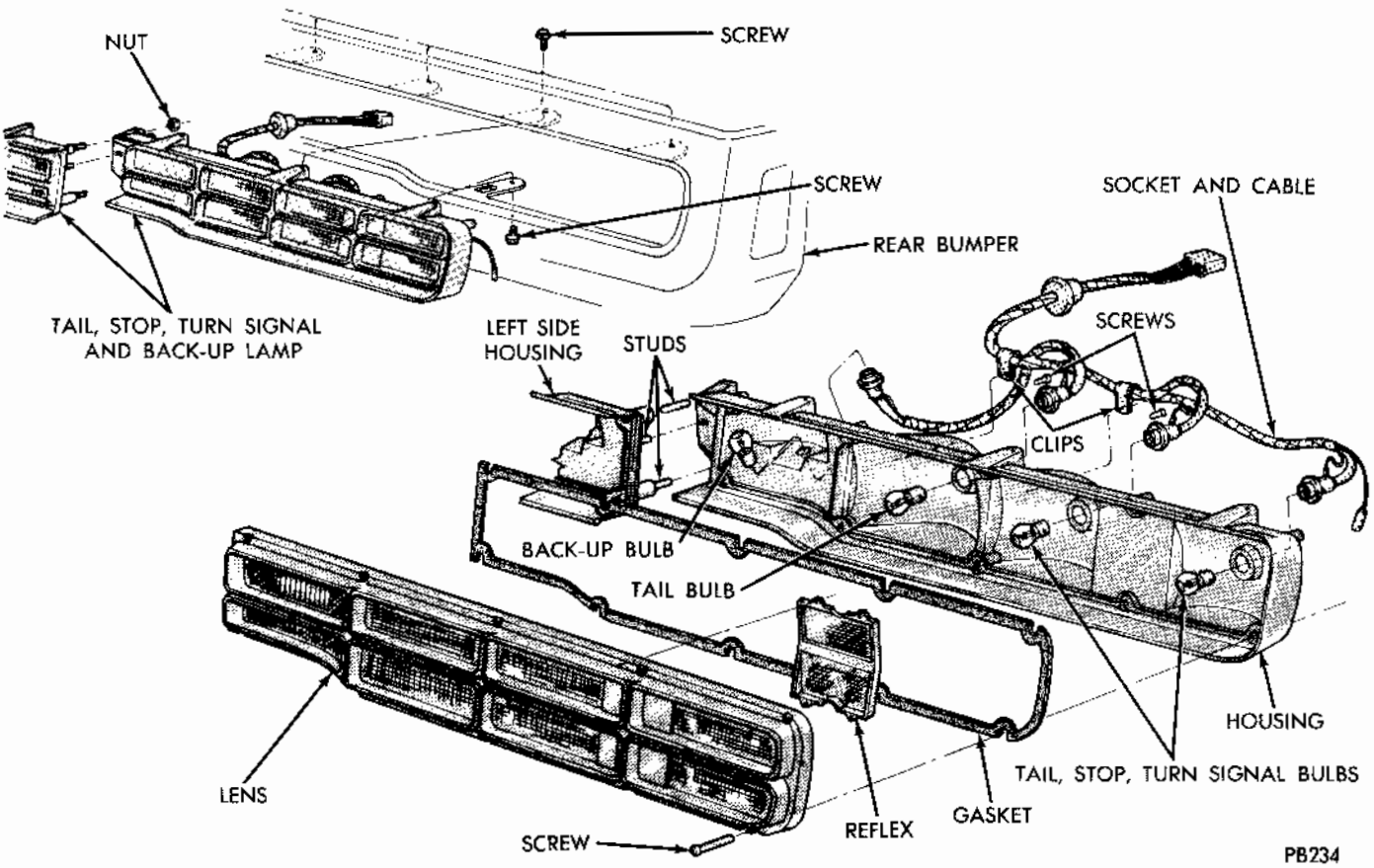

Fig. 10 - Tail, Stop, Turn Signal and Back-Up Lamps - Monaco

MyMopar.com

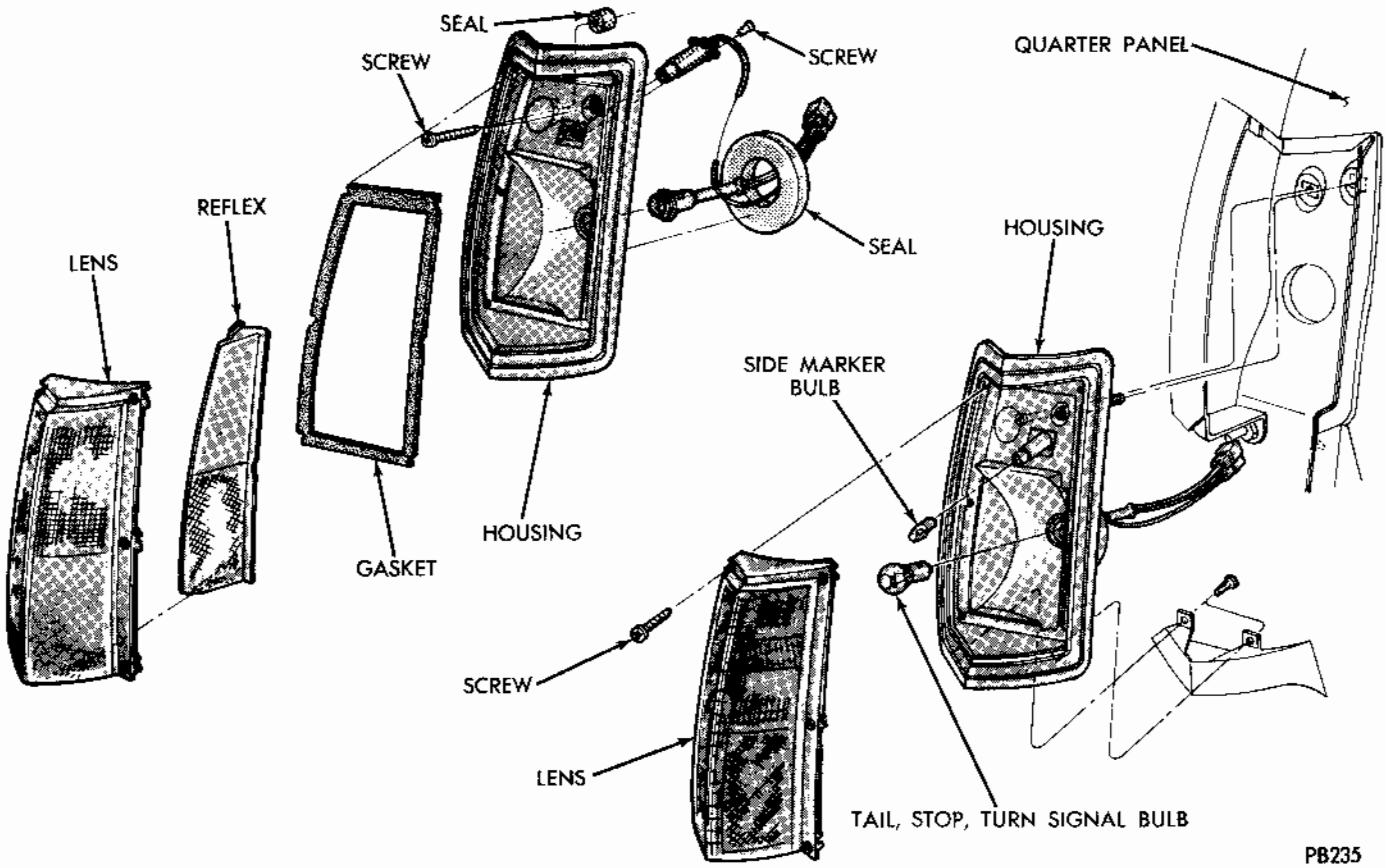

Fig. 11 - Tail, Stop, Turn Signal and Side Marker Lamps - Coronet Station Wagons

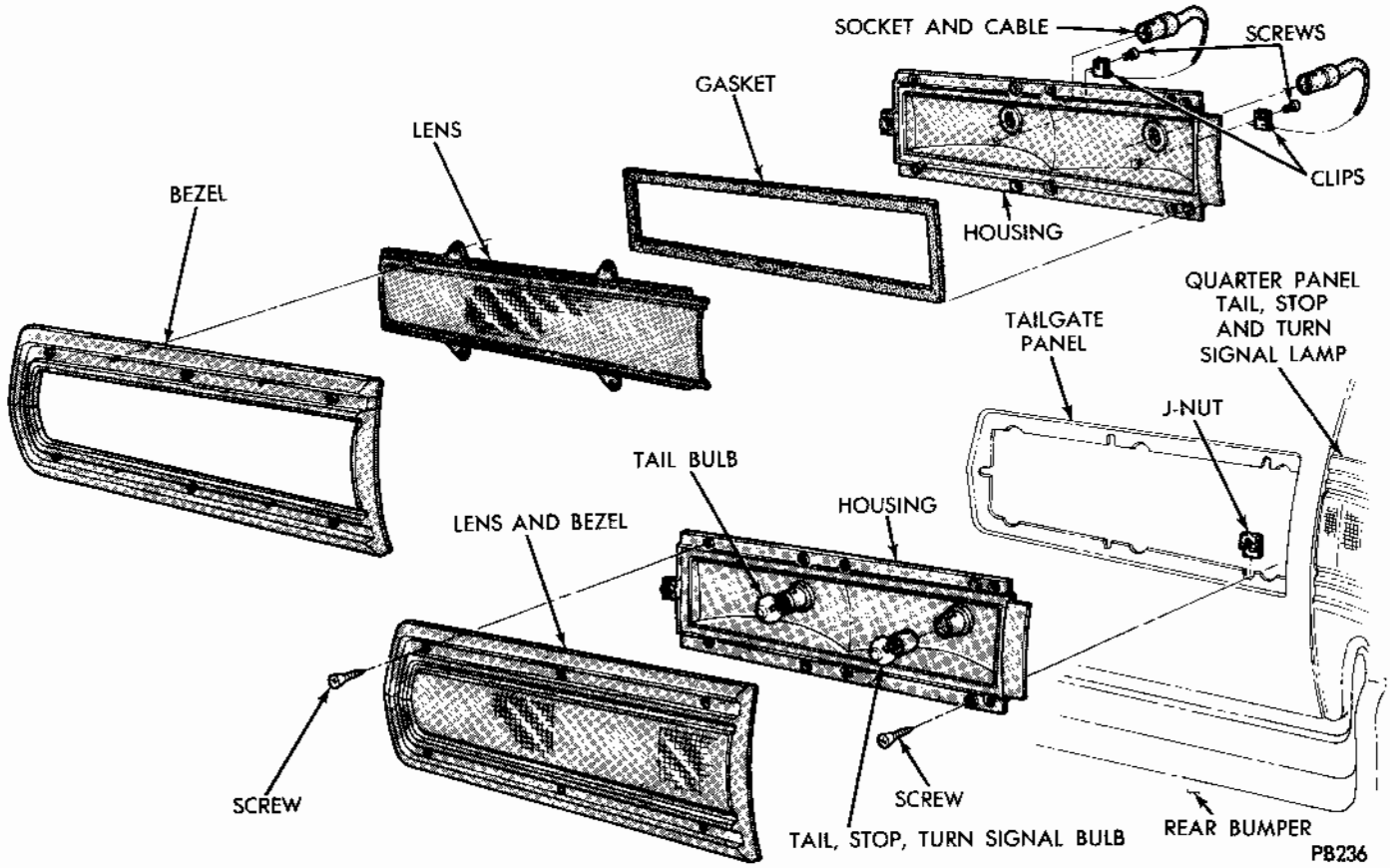

Fig. 12 - Tailgate Turn, Stop, Turn Signal Lamps - Polara/Monaco Station Wagons

MyMopar.com

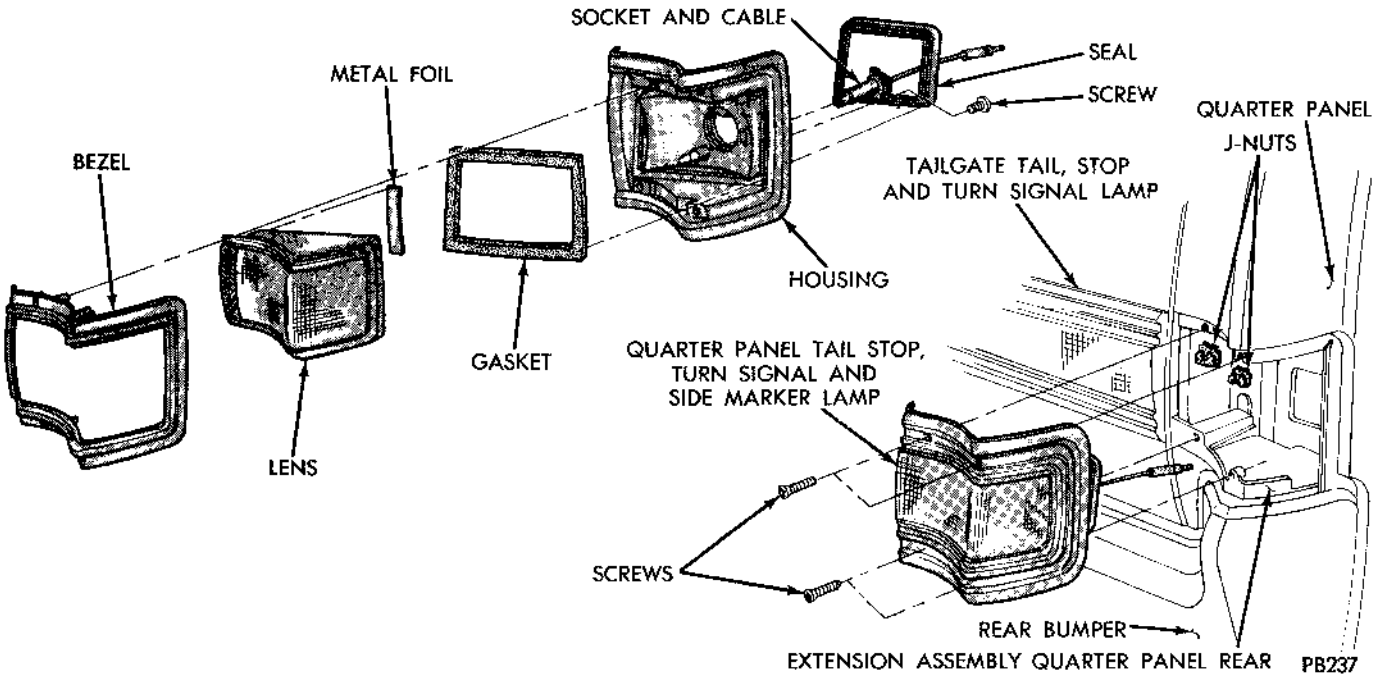

Fig. 13 - Quarter Panel Tail, Stop, Turn Signal and Side Marker Lamps Polara/Monaco Station Wagon

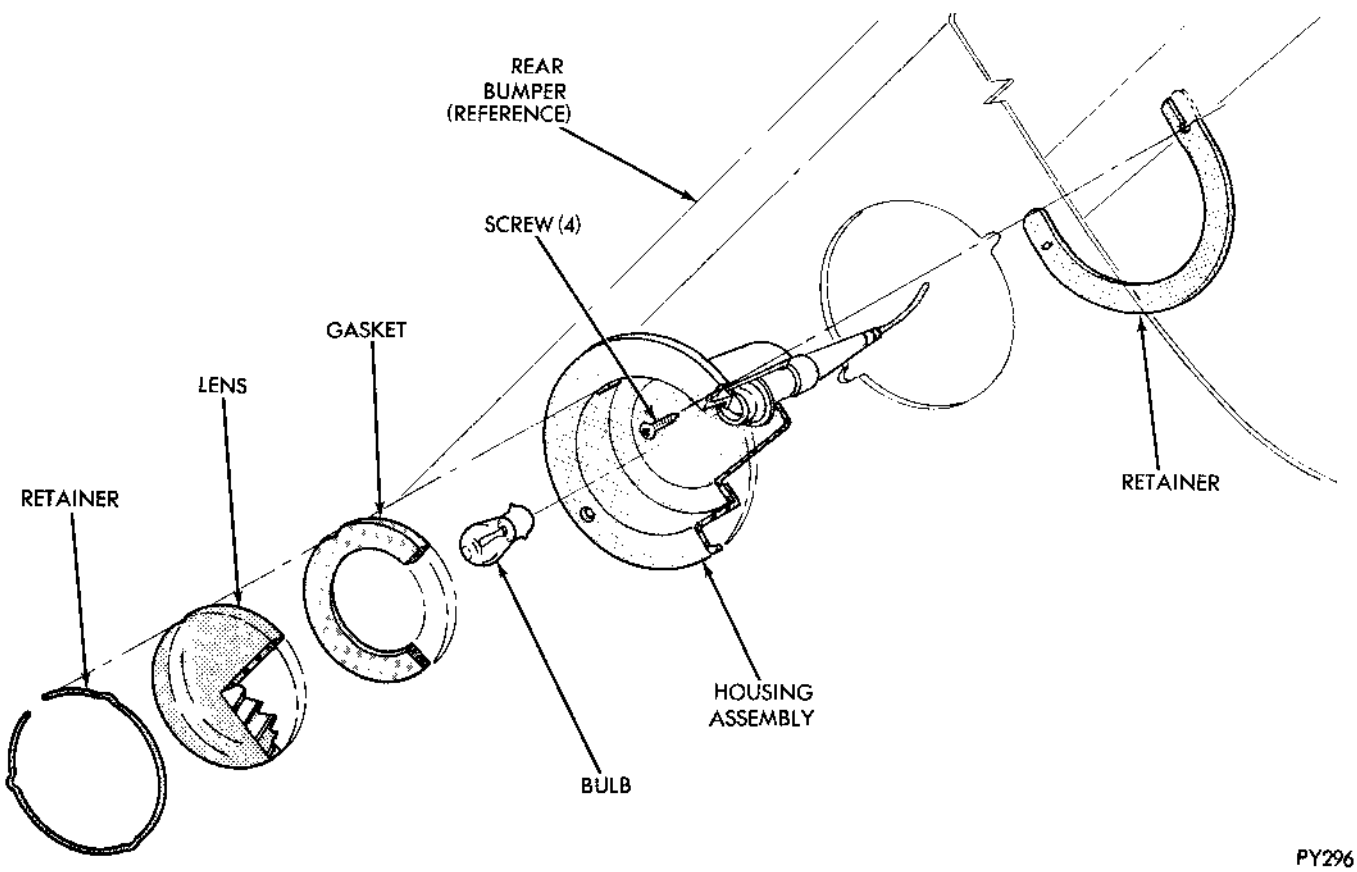

Fig. 14 - Back-Up Lamps Polara/Monaco Station Wagons

MyMopar.com

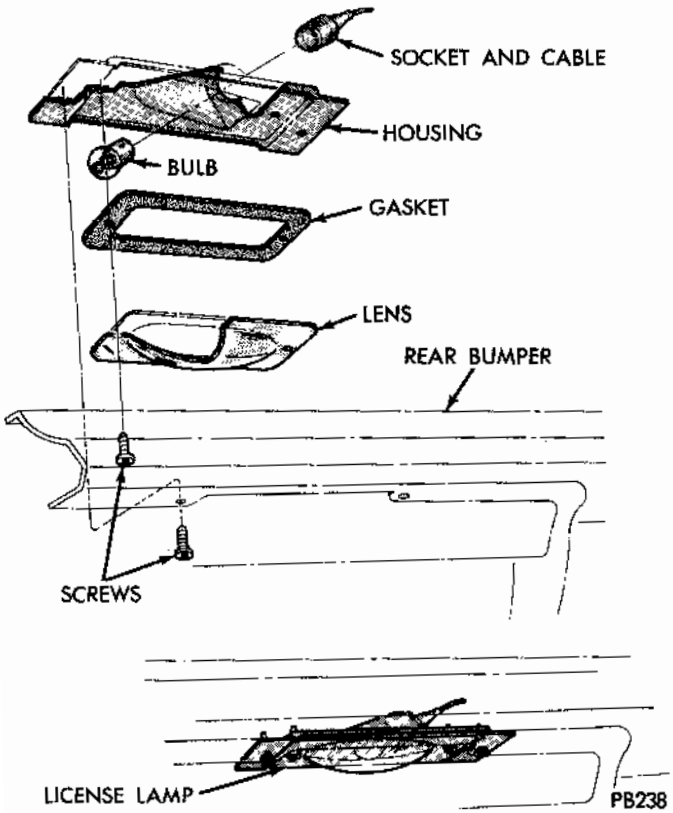

Fig. 15 - Rear License Lamp - Dart/ Challenger

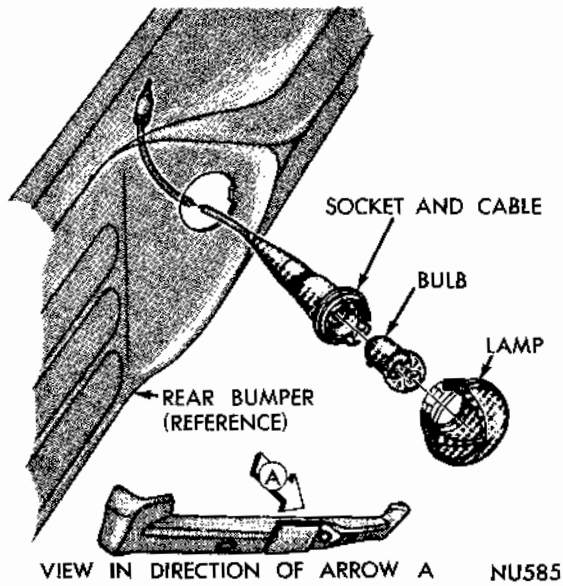

Fig. 17 - Rear License Lamp - Polara/ Monaco

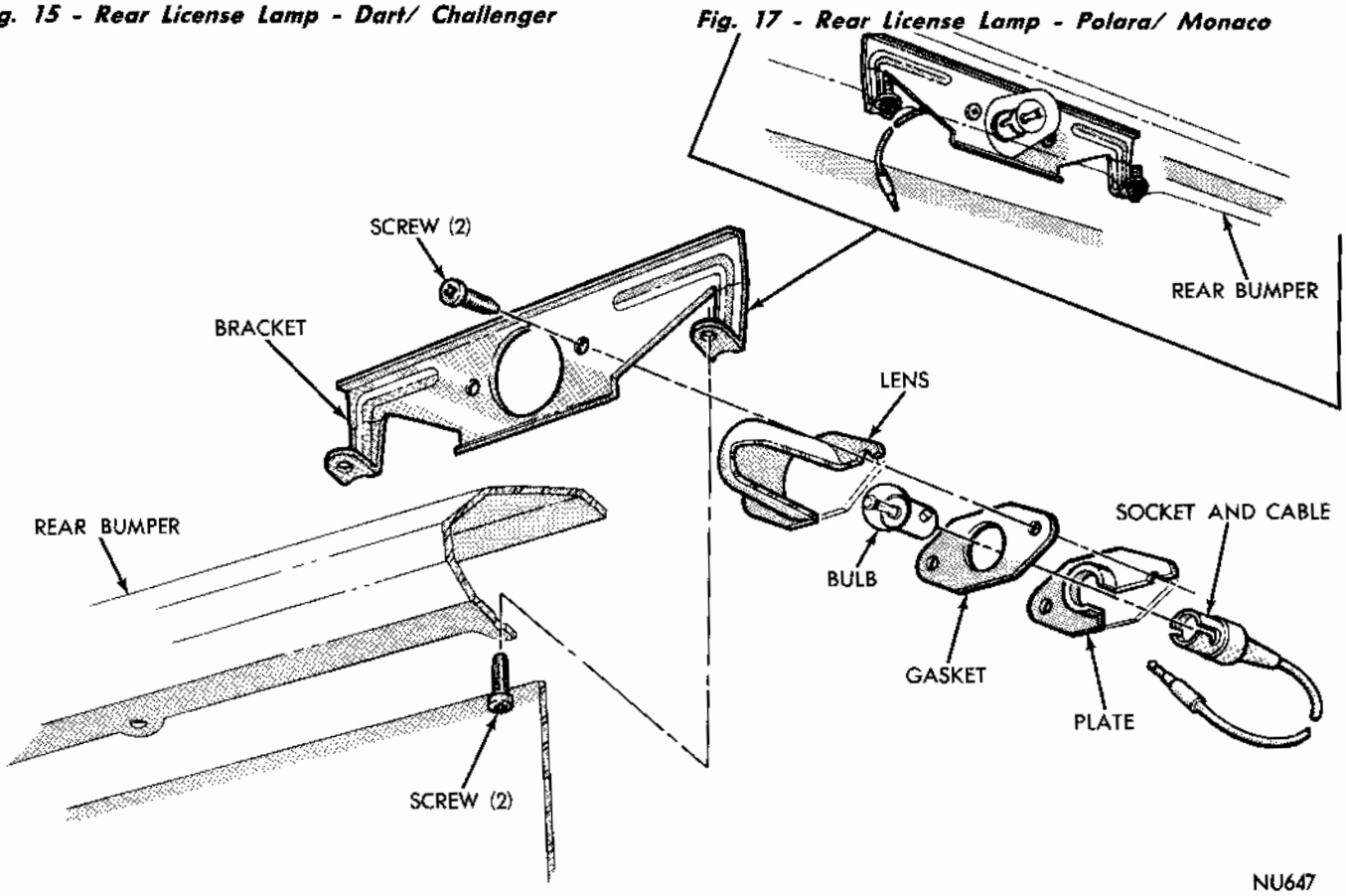

Fig. 16 - License Lamp - Coronet/Charger and Polara/Monaco

MyMopar.com

CONCEALED HEADLAMPS

INDEX

	Page
GEAR AND LIMIT SWITCHES	26
GENERAL INFORMATION	23
HEADLAMP DOORS	26
MOTOR AND WIRING	23
SERVICE DIAGNOSIS	23
SERVICE PROCEDURES	23
TORSION BAR AND MOTOR	27

GENERAL INFORMATION

The headlamp doors (Fig. 1) are electrically operated. A single electric motor mounted behind the center of the grille is a series-wound type with two field windings. The motor has a worm gear drive and internal limit switches. A relay and circuit breaker assembly is mounted to the instrument panel lower reinforcement, left of the steering column.

To open the headlamp doors in the event of an electrical failure, disconnect the motor leads **FIRST,** then rotate the hand wheel located at the lower end of the motor clockwise, as indicated by the decal on the radiator yoke, until the headlamp doors are fully opened.

CAUTION: Rotating the wheel after the doors reach the end of travel will permanently damage the motor.

SERVICE DIAGNOSIS

Condition	Possible Cause	Correction
HEADLAMP DOORS DO NOT OPERATE	a) Ignition switch in wrong position	a) Must be in the "On", not "Accessory" position.
	b) Faulty Motor	b) Repair or Replace per "Service Procedure".
	c) Faulty wiring to motor	c) Repair or Replace per "Service Procedure".
	(d) Torsion Bar disconnected	d) Reconnect.
	e) Crank Screws missing	(e) Replace (Tighten to 25 to 45 in. lbs.)
	f) Faulty headlamp switch or relay.	f) Replace
HEADLAMP DOORS UNEVEN - ONE DOESN'T COMPLETELY OPEN OR CLOSE	a) Torsion Bar Twisted	a) Replace
	b) One crank screw missing	(b) Replace (Tighten to 25 to 45 in. lbs.)
HEADLAMP DOORS OPERATE WITH EXCESSIVE NOISE	(a) Motor plastic drive gear stripped	a) Remove motor and replace gear, per "Service Procedures"
	b) Rubber bumper(s) worn or missing	b) Replace
	(c) Door pivot bushings worn, missing, or dry	c) Replace if worn or missing, lubricate if dry
	d) Door rubbing against grille	d) Adjust
	e) Torsion spring broken	e) Replace
NOISE IN PASSENGER COMPARTMENT - CYCLING CIRCUIT BROKEN	(a) Motor limit switch malfunction	a) Remove motor and replace switch plate per "Service Procedure".
	b) Circuit breaker failure.	b) Replace.

SERVICE PROCEDURES

MOTOR AND WIRING TESTS

(1) If headlamp doors do not operate and headlights and ignition switch are on (not accessory position), before starting any tests, first check for good ground continuity; terminals fully seated, and connectors free of dirt and corrosion; and that the wire from the motor ground terminal is connected to a good body ground.

CAUTION: Do not operate motor with headlamp doors disconnected as operating the motor without load will damage motor.

MyMopar.com

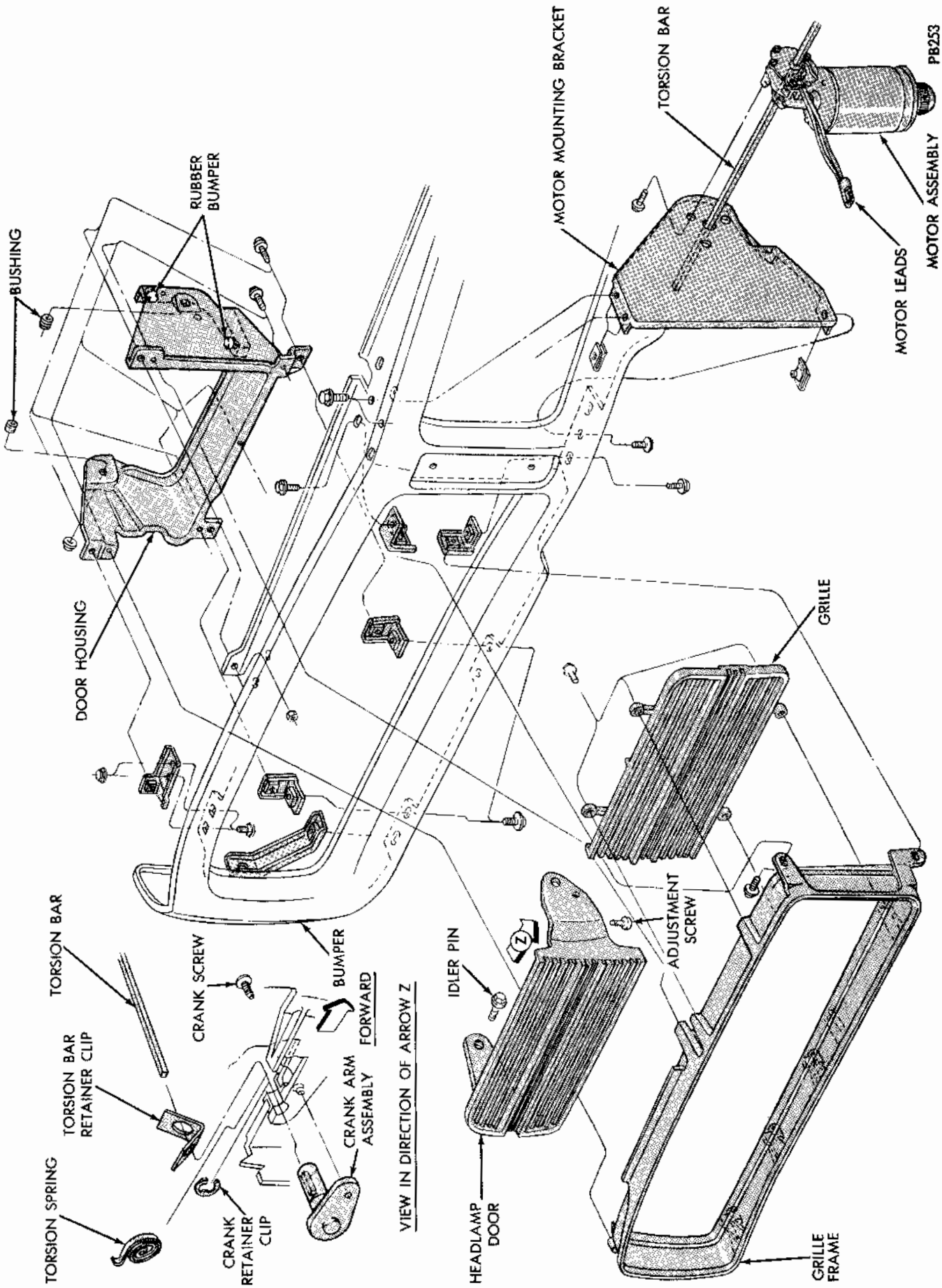

Fig. 1 - Concealed Headlamp Door Adaption-Charger

MyMopar.com

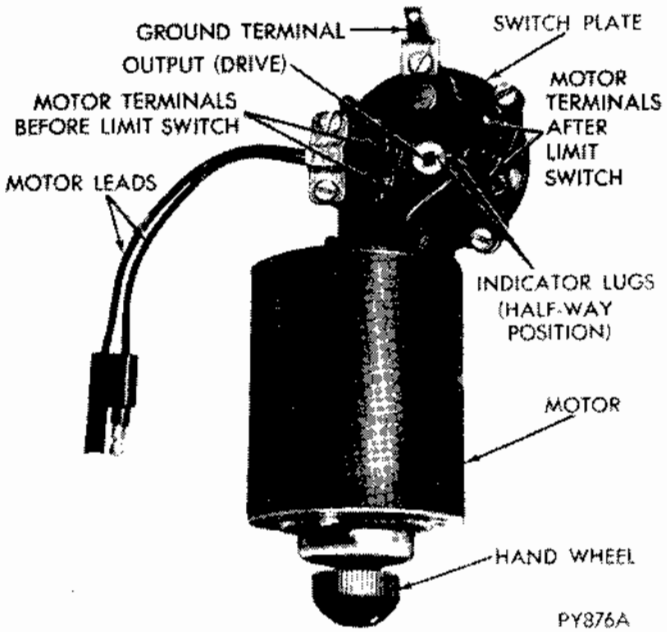

Fig. 2 - Manually Aligning Indicator Lugs

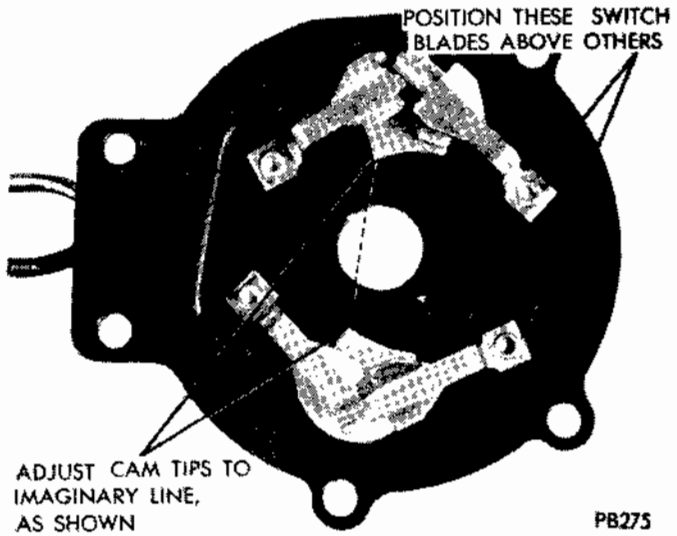

Fig. 3 - Positioning Cams and Switches

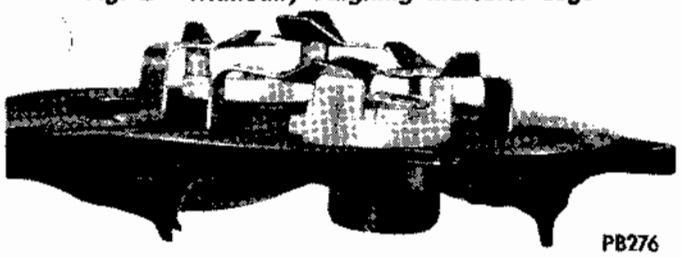

Fig. 4 - Switches Open

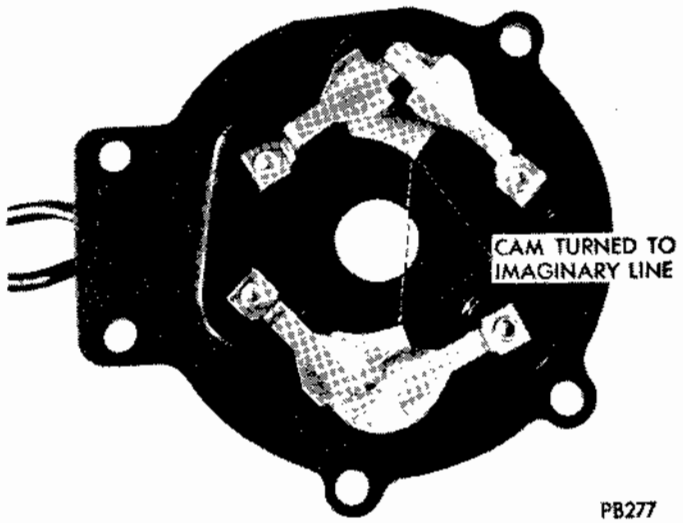

Fig. 5 - Switches Closed

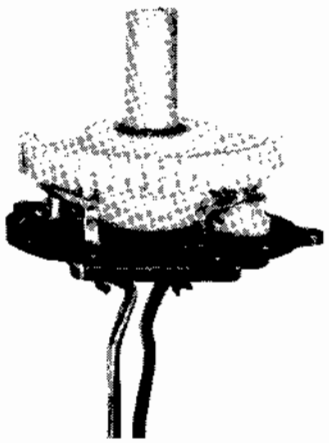

Fig. 6 - Testing Switch Operation

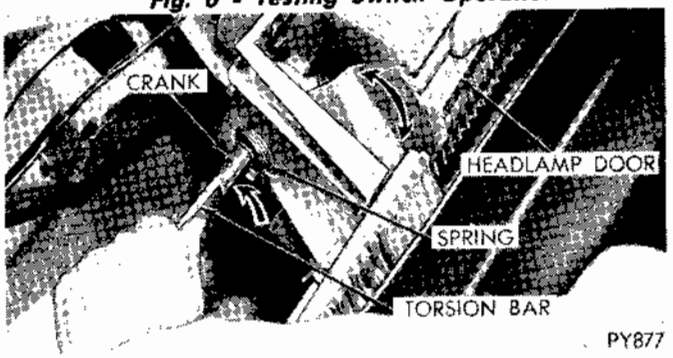

Fig. 8 - Removing Torsion Bar From Headlamp Door Crank (Typical)

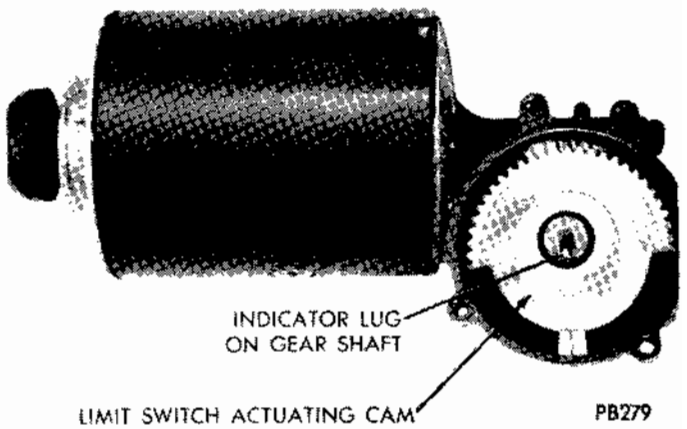

Fig. 7 - Gear Assembly

MyMopar.com

If the system is still inoperative perform step (2).

(2) **CAUTION: This test bypasses the limit switches so power should be applied only momentarily to avoid system damage.**

Using jumper wires test motor operation by using the car battery as a direct source of power. Apply power to the motor terminals after limit switch (See Fig. 2) and check motor operation in both directions. If the motor draws current but does not operate in either direction, the motor has an internal short circuit or a locked armature condition and should be replaced. If the motor draws no current, then there is an open circuit and the motor should be replaced. If the motor operates, test the limit switches by applying power to the motor terminals before limit switch (Fig. 2). If motor operates in both directions the limit switches are functional and step 3 should be performed.

If the limit switches are not functional, perform the gear and limit switch tests as detailed in the Service Procedures.

(3) Use jumper wires at bulkhead disconnect, to see if there is voltage at the terminal for both lights on and off. If there is no voltage for either door position, perform Step 4.

(4) Test for loose wire at the "H" terminal of headlamp switch, loose wires on headlamp motor relay, or faulty circuit breaker, as required.

GEAR AND LIMIT SWITCH TESTS

Removal

(1) Remove torsion bar and motor (see Service Procedures).

(2) Remove the screws from the switch plate. After checking that the indicator lugs are accurately lined up, and while holding the gear in place by pushing the output (drive), as shown in Figure 2, carefully remove the switch plate.

Gear Evaluation

(3) Remove the gear and examine for stripped or worn teeth. If no damage is observed perform step 4 (Limit switch evaluation). If gear damage is observed replace the gear assembly with parts from the service kit, as detailed below:

(a) Position a new cam, of the same color as the original cam,
in the locator slot of the new gear.

(b) Install the "O" rings, from the original gear, at each end
of the shaft of the new gear.

(c) Remove all chipped gear particles from the gearbox
and switch assembly.

Limit Switch Evaluation

(4) Position the switch cams as shown in Figure 3 and verify that the switch blade profile is as shown in Figure 4 (both switches open).

(5) Inspect the switch blade contact surfaces and clean if necessary.

(6) Position the switch cams as shown in Figure 5 and verify that both switches are now closed.

(7) Test switch operation by inserting the cam side of the gear assembly into the switch plate as shown in Figure 6. Rotate the gear assembly, while pressing it against the switch plate, to open and close the limit switches and observe their operation.

CAUTION: Do not over rotate since the cam can hit and damage the limit switch. Return the assembly to the Figure 5 condition (both switches closed) and remove the gear assembly.

(8) If the limit switches are not operating correctly replace the switch plate, using the Switch Plate and Gasket kit as detailed below:

(a) Remove sealant from motor terminals (Before and
After limit switch) and unsolder the wires.

(b) Solder the wires on to the new switch plate and reseal
with MS CC 95 or equivalent.

Installation

(9) Fill the teeth of the Armature Gear with Lubricant per Section O of Service Manual.

(10) Install the gear assembly in the gearbox, taking care to position it so that the indicator lugs will line up when the switch plate is installed.

(11) Install the switch plate (with gasket) on the gearbox, taking care not to dislodge the switch blades from their closed positions. Replace the screws.

(12) Install the torsion bar and motor (see Service Procedures).

(13) Test system operation.

CAUTION: Do not operate the motor with headlamp doors disconnected as operating the motor without load will damage the motor.

HEADLAMP DOORS

Removal

(1) Disconnect motor leads at harness connector (Fig. 1).

(2) Rotate motor hand wheel clockwise if doors are closed; or counter clockwise if doors are open; until headlamp doors are at the halfway open position (indicator lug on motor switch plate and lug on gear near rectangular hole are in alignment. Fig. 2).

MyMopar.com

(3) Compress torsion bar to headlamp door crank clip and slide clip from crank (Fig. 1).
(4) Force the torsion bar from the crank arm slot by wiggling the door up and down with one hand while pulling the bar out from the slot with your other hand (Fig. 8).
(5) Remove inboard sealed beam units.
(6) Remove retainer clip from crank assembly (Fig. 1).
(7) Remove screw holding the crank assembly to the door arm at the inboard side of door.
(8) Remove crank assembly from headlamp door.
(9) Remove idler pin from outboard side of door.
(10) Remove door from opening.

Installation

(1) Position door in grille opening, align crank assembly holes and insert crank.
(2) Align idler pin holes and install idler pin. Check that crank arm and idler pin bushings are in place.
(3) Install retainer on crank.
(4) Install screw on side of door, attaching the crank assembly to the door, and tighten to 25 to 45 in. lbs.
(5) Position and fully seat torsion bar in slotted area of crank. (Check that the motor is in halfway open position. Fig. 2).
(6) Compress and position clip over crank and torsion bar.
(7) Install headlamp sealed beam units and connect battery ground strap.
(8) Connect motor leads at harness connector (Fig. 1).

TORSION BAR AND MOTOR

The torsion bar and motor is removed as an assembly.

Removal

(1) Disconnect battery ground cable.
(2) Disconnect motor leads including ground wire from harness.
(3) Rotate the hand wheel on the motor counterclockwise if doors are closed; or clockwise if doors are open; until headlamp doors are at the halfway open position (Fig. 2).
(4) Compress and remove clips from crank assemblies (Fig. 1).
(5) Remove torsion bar from slotted areas in cranks as described in headlamp door removal (Fig. 8).
(6) Remove motor (3 screws) from motor mounting bracket.
(7) Remove torsion bar from motor.

Installation

CAUTION: Do not bench test new motor. Operating motor without load will damage motor.

(1) Insert torsion bar in motor and position clips on bar. The torsion bar and the hole in the motor are rectangular and can be assembled only one way.
(2) Position motor on motor mounting bracket and install mounting screws. Verify that the motor is in the halfway open position (Fig. 2). Tighten attaching screws to 95 inch pounds, plus or minus 20 inch pounds.
(3) Position and fully seat torsion bar in slotted areas of cranks. Compress clips and position over cranks and torsion bar.
(4) Connect motor to harness and connect battery ground strap.
(5) Test operation of doors.

HEADLAMP WASHERS

GENERAL INFORMATION

To operate the headlamp washer system the engine must be running and the headlamps "On". Then by depressing and holding the Headlamp Wash Switch for four or five seconds the headlamps will be washed.

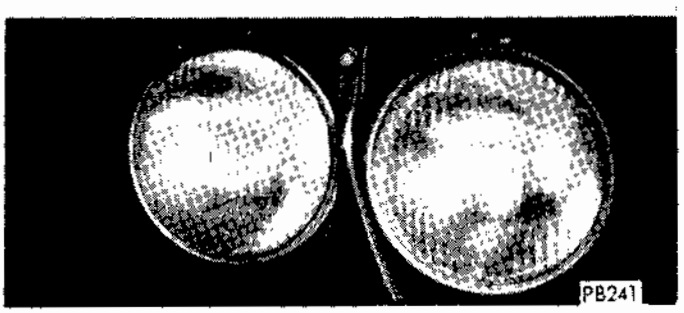

Fig. 1 - Headlamp Washers-Brush at Rest

The headlamp washer system has been designed to remove, while driving, deposits that accumulate on the headlamps. The outer lamp was selected for cleaning because it contains both a high and low beam element. The cleaning is accomplished by spraying a washer solvent and brushing with a vacuum operated brush mechanism. The spray is directly on the brush and continues through the brush arc. The brushes are spring loaded to the rest position and are operated by a vacuum actuator that overcomes the spring load to move the

MyMopar.com

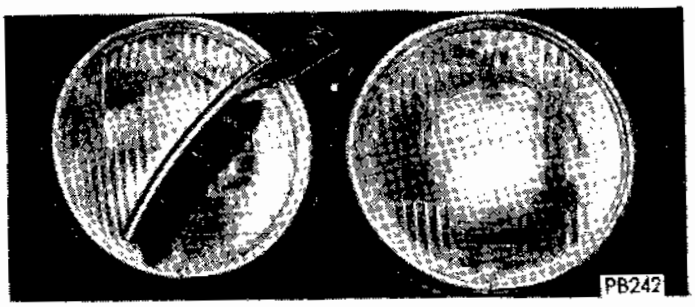

Fig. 2 - Headlamp Washers-Brush in Motion

brushes over the lamp face. A special type of flasher (similar to, but not interchangable with, the hazard flasher) is used to interrupt electrical power from the switch to the vacuum solenoid and the pump motor. This causes the system to cycle even though the switch is held continuously.

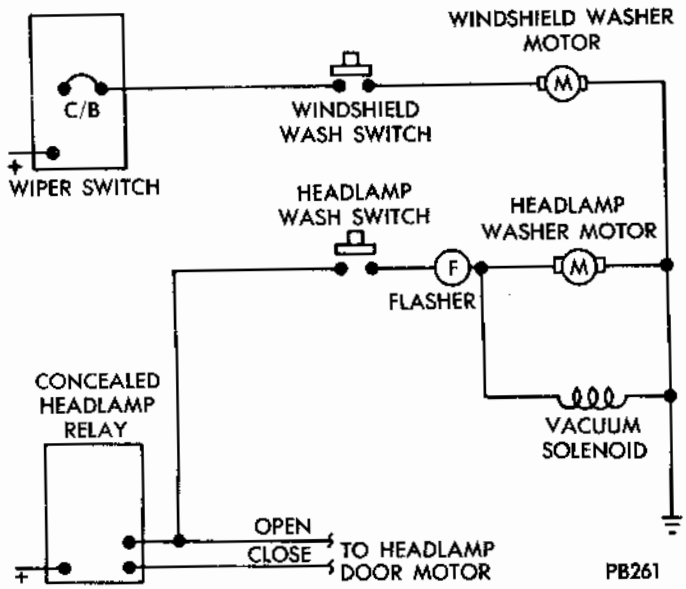

Fig. 4 - Headlamp Washer Wiring Schematic -Charger

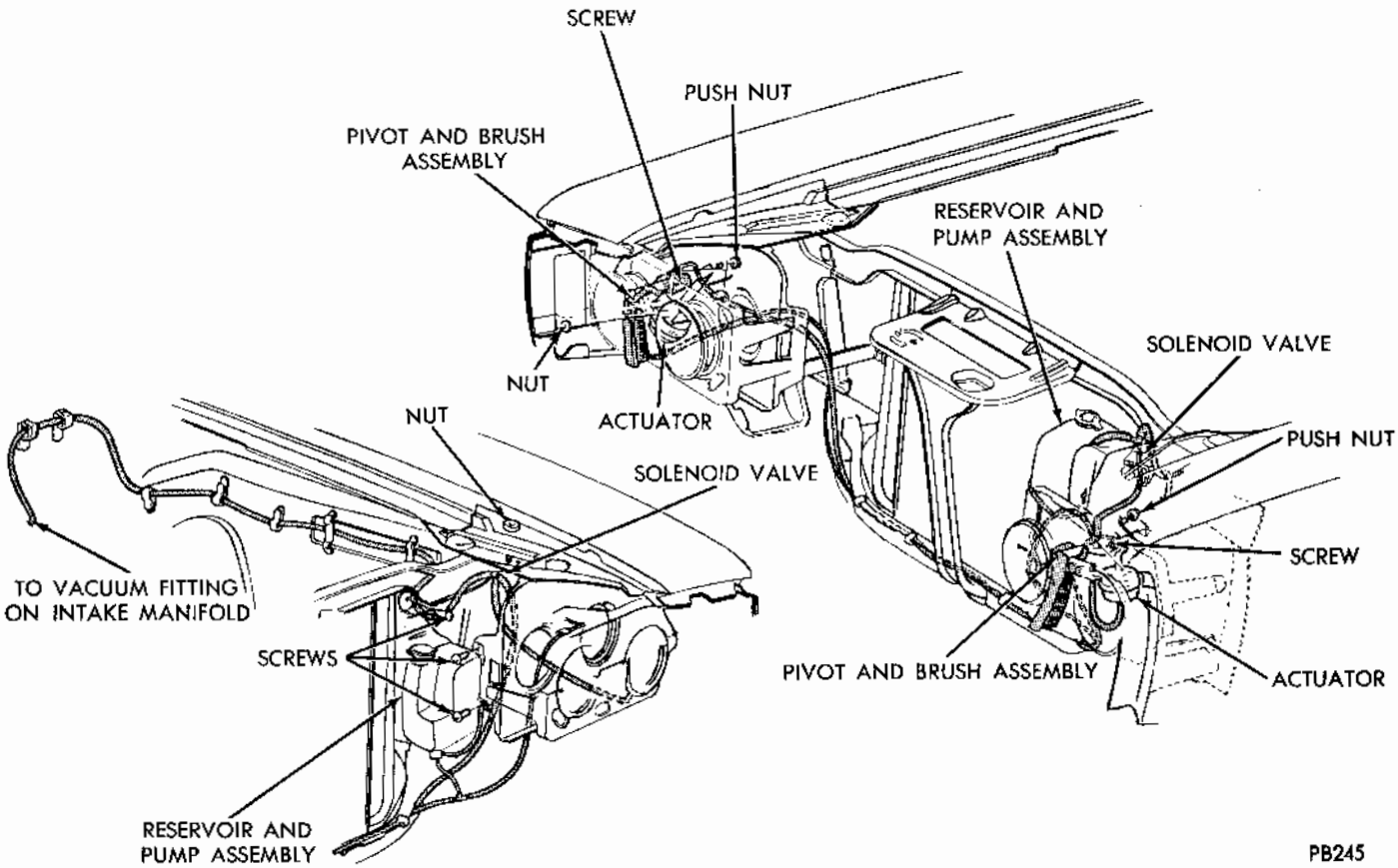

Fig. 3 - Headlamp Washer-Charger

SERVICE DIAGNOSIS

Condition	Possible Cause	Correction
BRUSHES INOPERATIVE WASHERS O.K.	a. Loss of vacuum	a. Check vacuum hose and solenoid operation
	b. Faulty actuator	b. Replace actuator

MyMopar.com

SERVICE DIAGNOSIS

Condition	Possible Cause	Correction
	c. Faulty pivot assembly	c. Replace pivot assembly
	d. Faulty Solenoid	d. Replace solenoid
WASHER INOPERATIVE BRUSHES O.K.	a. Faulty washer motor	a. Replace motor pump assembly
	b. Nozzles plugged	b. Clean or replace nozzles
	c. Broken or loose hose	c. Replace hose
	d. Faulty pump	d. Replace motor/pump assembly
	e. Faulty wiring	e. Check wiring
WASHERS AND BRUSHES INOPERATIVE (CHARGER)	a. Faulty flasher	a. Replace flasher
	b. Faulty switch	b. Replace switch
	c. Faulty wiring	c. Check wiring

SERVICE PROCEDURES

Brush Replacement

(1) Remove retaining nut.
(2) Remove nozzle and spring.
(3) Remove clip/pin from brush.
(4) Remove brush.
(5) Replace brush and reassemble.
(6) Check operation.

Actuator Replacement

(1) Disconnect vacuum hose.
(2) Disconnect link from crank pin by removing pushnut.
(3) Remove two nuts holding actuator.
(4) Install new actuator.
(5) Connect link to crank and install new push nut.
(6) Connect vacuum hose.
(7) Check operation.

Solenoid Replacement

(1) Remove all vacuum hoses.
(2) Remove electrical connector.
(3) Remove solenoid.
(4) Install new solenoid.
(5) Attach electrical connector and vacuum hoses.
(6) Check operation.

Washer Pump/Motor Assembly Replacement

(1) Disconnect electrical connector.
(2) Disconnect hose from pump nozzle.
(3) Remove mounting screws of reservoir.
(4) Remove reservoir.
(5) Remove and replace motor/pump assembly.
(6) Install reservoir and pump assembly.
(7) Connect electrical connector.
(8) Connect hose.
(9) Check operation.

POWER WINDOW LIFT

INDEX

	Page
Circuit Breaker	30
Electrical Tests	30
General Information	29
Motor Test	30
Motor Lubrication	30

GENERAL INFORMATION

Front, rear and quarter panel window lift motors are of the permanent magnet type. The motors are grounded through the master switch by a black lead attached to the left cowl panel.

The tailgate window lift motor for the Coronet station wagon is a permanent magnet type. It is grounded through the instrument panel switch by a black lead attached to the lower reinforcement of the instrument panel.

The tailgate window lift motor for the Polara, Monaco station wagon is a wound field series type. The field has two windings, one for each direction of rotation. The fields are grounded to the body through the motor housing, with the switch completing the particular circuit back to ground when it is actuated.

MyMopar.com

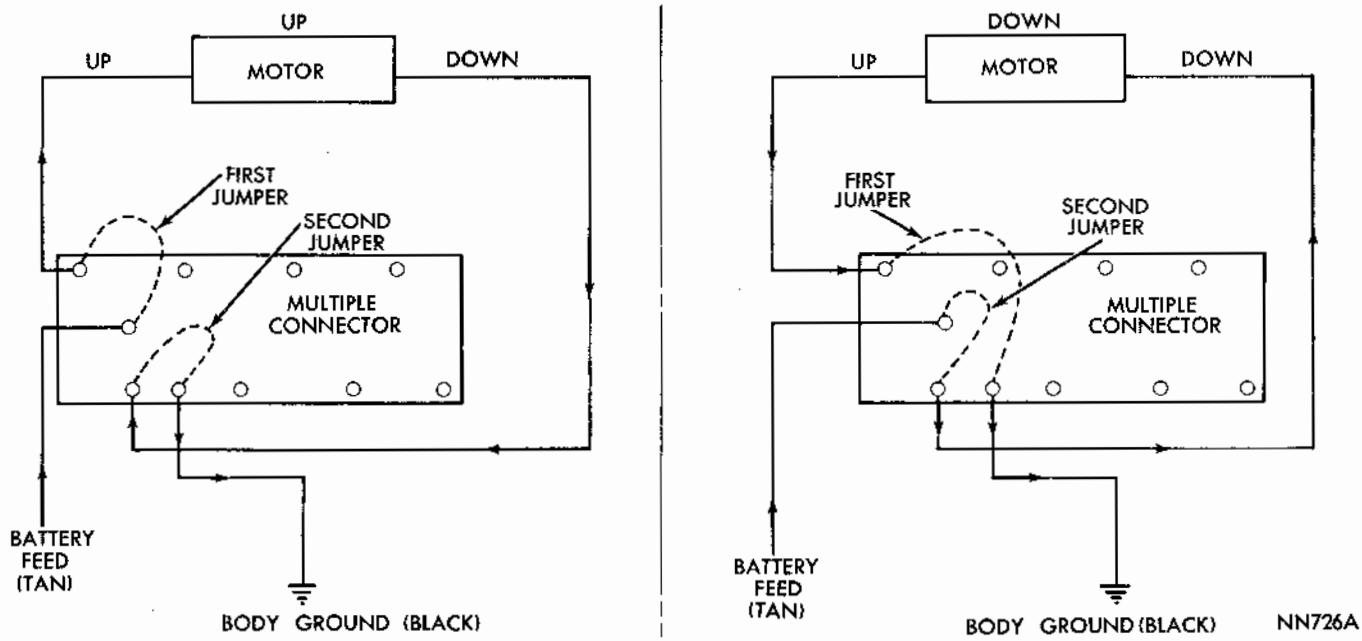

Fig. 1 - Testing Electrical Switch

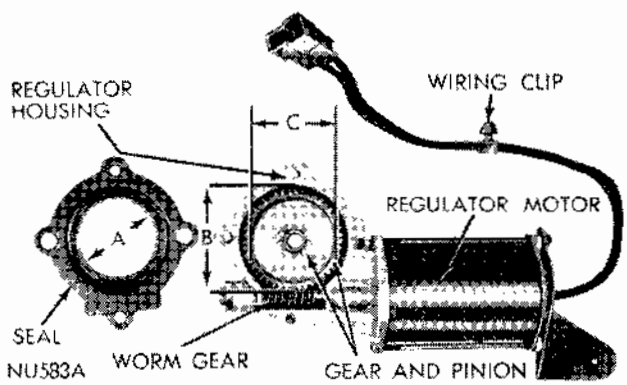

Fig. 2 - Window Lift Motor Lubrication

CIRCUIT BREAKER TEST

Connect one lead of a test light to output terminal of circuit breaker and other lead to a good ground. The test bulb should light, if not and wire continuity has been established, replace the circuit breaker.

ELECTRICAL TESTS

Glass may not move due to a binding condition between the glass and run channels. Correct the binding condition before making electrical tests.

WINDOW LIFT SWITCH TEST

Remove switch from trim panel for testing purposes. Carefully separate multiple terminal block from switch body. Connect one lead of a test light to black wire terminal and touch other lead to tan wire terminal. The test bulb should light, if not, test wires for an open circuit. Use two jumper wires to test continuity of circuits. Connect one jumper to the tan lead and the other end to the **Up** or **Down** terminal (opposite of glass position). Connect the other jumper to a good ground and to the opposite terminal (Fig. 1).

If motor runs, install switch body on multiple connector and activate switch. Should motor fail to run, replace switch body. Each switch is tested in same manner.

The motor should run, if not, test continuity of wiring. Should continuity be established and motor still does not run, replace motor.

To avoid injury, NEVER remove the counterbalance spring or motor from the regulator assembly without locking the unit in a bench vise. (See Body Section for proper removal).

WINDOW LIFT MOTOR TEST

Connect the positive lead from a test battery to one of the two motor terminals. Connect the negative lead from the test battery to the other motor terminal. The motor should rotate in one direction to move the window up or down. Reverse the battery leads and the motor will rotate in the opposite direction. If the motor does not operate in both directions replace the motor assembly.

GEAR AND PINION REPLACEMENT

When the gear and pinion assembly is replaced in the gear box, (Fig. 2) lubrication of the gear box, gear and pinion and seal is necessary if these parts have been disassembled. If there is no lubricant in the gear box, fill to the top of the gear with MoPar 2525035 Multi-Mileage Lubricant or

MyMopar.com

MoPar 1064768 Lubri-Plate or equivalent. Apply a liberal amount of lubricant to the entire inside diameter of the seal marked "A" and the outside diameter of the gear and pinion assembly marked "B", and diameter marked "C" where the seal contacts the gear and pinion.

TAILGATE MOTOR TEST (PERMANENT MAGNET)

Connect a positive lead from a test battery to one terminal on the motor. Connect a negative lead from the test battery to the other terminal on the motor. The motor should rotate in one direction. Reverse the battery lead and the motor will rotate in the opposite direction. If the motor does not operate in both directions replace the motor assembly.

TAILGATE MOTOR TEST (Wound Field)

Connect a positive lead on test battery to one of the two motor field terminals. Connect the negative lead to the motor case. The motor should rotate in one direction. To reverse the direction move the positive battery lead to the other motor terminal, keep the ground lead connected to the motor case. If the motor does not actuate both both ways replace the motor assembly.

ELECTRIC LOCKS

INDEX

	Page
Electrical Test (Deck Lid)	32
Electrical Test (Doors)	31
Electrical Test (Tailgate)	32
General Information	31
Solenoid Adjustment (Deck Lid)	32
Solenoid Adjustment (Doors)	32
Solenoid Adjustment (Tailgate)	32

GENERAL INFORMATION

All doors can be locked or unlocked electrically by operating either of the front door locking buttons. The rear door locking buttons will lock or unlock the rear doors mechanically.

The right front door can be locked or unlocked mechanically.

The left front door can be unlocked by means of the inside remote handle, but cannot be locked mechanically from inside the car.

The tailgate door locks automatically when the ignition switch is turned on. The tailgate may be unlocked electrically with the ignition switch on, by actuating the tailgate unlock switch located on the instrument panel. Hold the switch in the engaged position until the tailgate has been opened.

The tailgate will lock when the spring loaded switch has been released if the ignition switch is on. When the ignition switch is off the tailgate may be unlocked by actuating the tailgate unlock switch, using the tailgate key, or the locking button. The door will lock automatically when the ignition switch is turned on.

The deck lid lock consists of a push button switch and a solenoid. The solenoid is energized only when the push button is depressed.

ELECTRICAL TESTS (DOORS)

The battery must be in normal condition before testing.

Make certain solenoids are correctly adjusted before circuits are tested. The circuit breaker is located behind the left side cowl trim panel. The relay is located behind the right side cowl trim panel.

Connect the positive lead of a voltmeter to the buss bar on the relay assembly and the negative lead of the voltmeter to a good ground (Fig. 1). With no load, voltage should be 12.6 volts and 9.4 volts when locks are activated. If no reading is obtained at relay, the circuit breaker should be tested next. See "Wiring Diagrams" for appropriate schematic wiring diagram.

Connect Voltmeter positive lead to light green terminal of circuit breaker and other lead to a

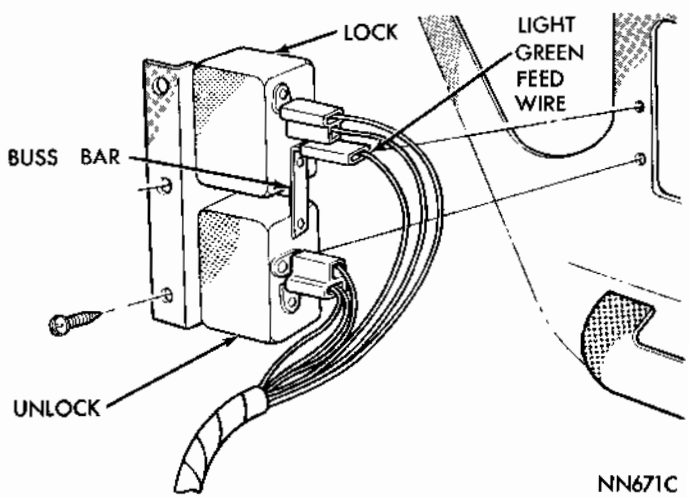

Fig. 1 - Door Lock Relay

MyMopar.com

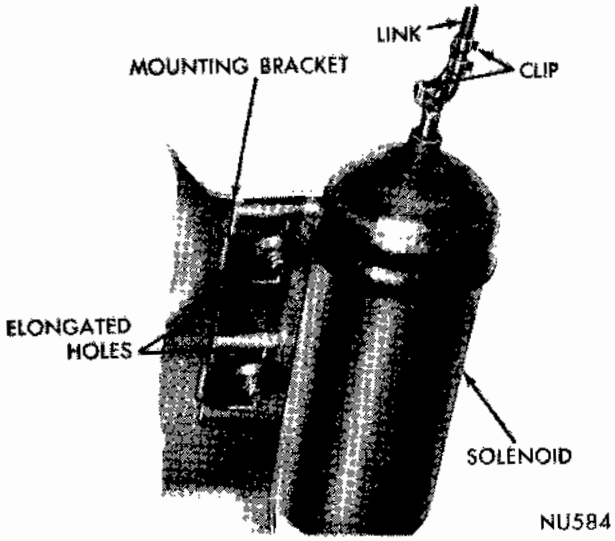

Fig. 2 - Solenoid Adjustment

good ground. If a reading of 12.4 volts is not obtained, connect the voltmeter to the battery side of the circuit breaker. If a reading of 12.4 volts is obtained, the circuit breaker is probably defective and should be replace. If a reading of 12.4 volts is not obtained, inspect for a broken feed wire or loose connection.

To determine which solenoid is faulty, check each individual door for electrical lock and unlock or disconnect the solenoid connectors one at a time, while operating the door lock switch. When faulty solenoid is disconnected, the remaining door locks will operate. If necessary to replace solenoid, refer to Group 23 "Body and Frame".

If the solenoid failure was caused by overheating (sticking switch), the remaining solenoids should be checked for proper operation and replaced if necessary.

SOLENOID ADJUSTMENT (DOORS)

(1) Loosen solenoid mounting screws and slide solenoid to full down position. (Fig. 2)

(2) Extend solenoid link until latch is in locked position.

(3) Tighten solenoid mounting screws and test operation of lock.

ELECTRICAL TEST (TAILGATE)

The battery must be in normal condition before testing. Make certain the solenoid is correctly adjusted before circuit is tested. Remove the wiring connector at the solenoid in the tailgate. Connect a test lamp to the pink lead at the connector in the wiring harness, with the ignition switch on the test lamp should be lit.

Move the tailgate unlock switch to the unlock position and hold, the test lamp should go out.

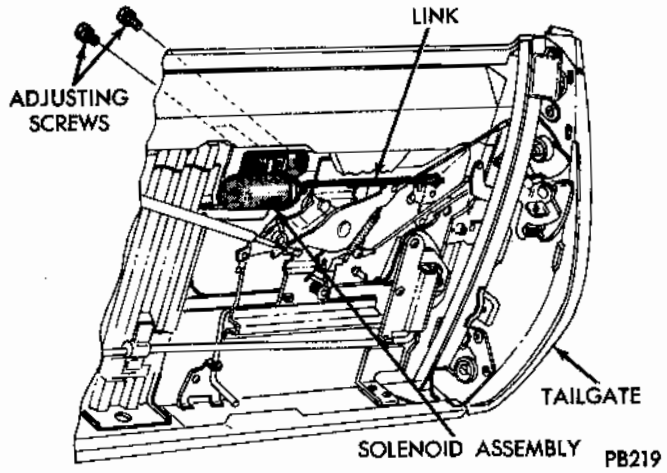

Fig. 3 - Tailgate Lock Solenoid Mounting

Move the test lamp lead to the orange lead in the connector, the test lamp should be lit, release tailgate unlock switch and test lamp should go out.

To determine if the solenoid is operating properly, connect a hot lead to the orange wire in the solenoid connector, the solenoid link should extend. Move the hot lead to the pink wire in the connector and the solenoid link should retreat.

SOLENOID ADJUSTMENT (TAILGATE)

(1) Loosen the solenoid attaching screws that mount the solenoid to the mounting bracket and move solenoid away from the locking controls.

(2) Grasp the solenoid link and pull it toward the locking control until the push button is in the full up position. This will move the solenoid in the direction of the locking control, but the solenoid must be restained slightly to ensure that the internal switch is fully open.

ELECTRICAL TEST (DECK LID)

The battery must be in normal condition before testing. Disconnect the wire from the solenoid and connect one lead of a test lamp to the wire. Ground the other lead of the test lamp. Actuate the deck lid lock switch. The test lamp should light. If the test lamp fails to light check the switch and wiring.

To test the solenoid, connect a hot lead to the solenoid terminal. The solenoid shaft should retract.

Failure of solenoid to retract indicates a poor ground between the solenoid and deck lid or, the solenoid is defective.

SOLENOID ADJUSTMENT (DECK LID)

If the deck lid does not latch or unlatch properly, loosen the solenoid mounting screws and move the solenoid toward or away from the latch assembly until the deck lid properly latches.

MyMopar.com

POWER SEATS

INDEX

	Page
General Information	33
Service Procedures	33
Adjuster	34
Installation	35
Removal	34
Cable and Housing	35
Installation	35
Removal	35
Electrical Tests	33
Horizontal and Vertical Transmissions	35
Installation	36
Removal	35
Motor	34
Installation	35
Removal	34
Seat Assembly and Adjuster	34
Installation	34
Removal	34
Wiring Diagrams	43

GENERAL INFORMATION

This power seat can be adjusted in six different directions - up, down, forward, back, tilt forward, or tilt rearward.

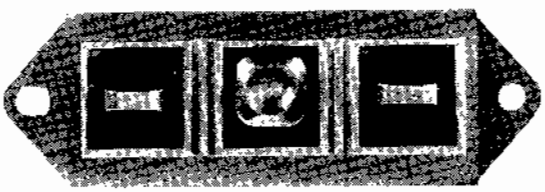

NU523

Fig. 1 - Switch Assembly

The control switch is located on the lower outboard side of the seat. The front lever on the switch (Fig. 1) raises or lowers (tilts) the front of the seat, the center lever raises or lowers the complete seat by moving switch up or down. It also moves it forward or backward by moving switch forward or rearward. The rear lever raises or lowers (tilts) the back of the seat.

A three armature permanent magnet reversible motor is coupled through cables to rack and pinion assemblies located in the seat tracks, providing the various seat movements.

The electrical circuit is protected by a 30 amp circuit breaker located on the fuse block on the inside of the cowl panel to the left of the steering column.

SERVICE PROCEDURES

ELECTRICAL TESTS

Before any testing is attempted the battery should be fully charged and all connections and terminals cleaned and tightened to insure proper continuity and grounds. With everything connected and the dome light on, apply switch in direction of failure, if dome light dims the seat motion is trying to work indicating mechanical jamming. If dome light does not dim then proceed with the following electrical tests.

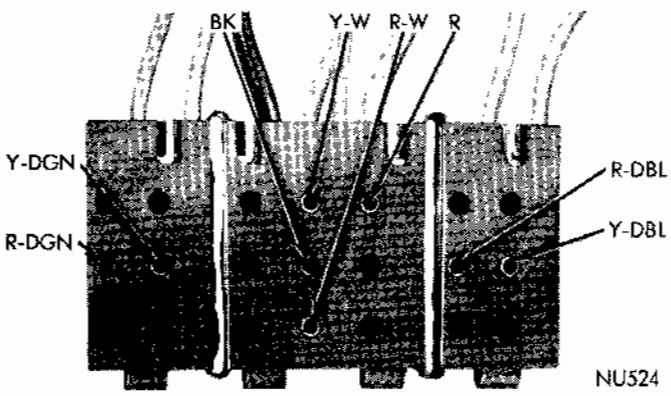

NU524

Fig. 2 - Electrical Test Area Location

(1) Disconnect wire from instrument panel feed at fuse block side cowl circuit breaker.

(2) Connect test lamp C-744 in series between instrument panel feed and good ground. If test lamp lights feed-in wiring is good.

(3) Remove test lamp and connect feed to circuit breaker.

(4) Disconnect wiring from other side of circuit breaker. Connect test lamp C-744 in series between circuit breaker and good ground, if test lamp lights circuit breaker is good.

(5) Remove test lamp and connect wiring harness.

(6) Disconnect wiring harness at connector under seat. Connect test lamp C-744 between red (R) and black (BK) wire in female connector on

MyMopar.com

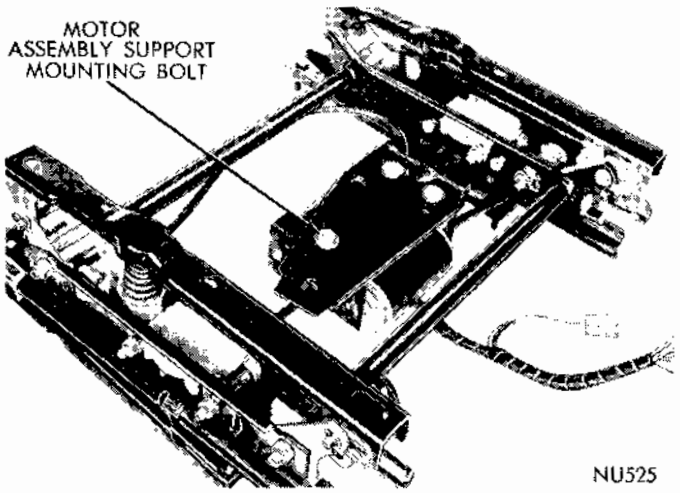

Fig. 3 - Mounting Bolt Location

harness, if test lamp lights harness to seat is good.

(7) Remove test lamp and connect harness.

(8) Remove switch from seat harness.

(9) To check front motor connect a covered jumper wire between the red (R) terminal in the center section (Fig. 2) either the red with dark green (R-DGN) tracer, or yellow with dark green (Y-DGN) tracer connection in the front section. Connect a second covered jumper wire between the black (BK) terminal in the center section and the open connection in the front section, if motor does not operate, reverse the jumpers in the front section. If motor still does not operate, either the harness or complete three motor assembly should be replaced.

(10) To check center motor connect a covered jumper wire between the red (R) terminal of the center section (Fig. 2) and either the red with white tracer (R-W) tracer, or yellow with white (Y-W) tracer connection in the center section. Connect a second covered jumper wire between the black (BK) terminal in the center section and the open connection in the center section, if motor does not operate, reverse the jumpers (RW) and (Y-W). If motor still does not operate, either the harness or complete three motor assembly should be replaced.

(11) To check rear motor connect a covered jumper wire between the red (R) terminal in the center section (Fig. 2) and either the red with dark blue (R-DBL) tracer, or yellow with dark blue (Y-DBL) tracer connection in the rear section. Connect a second covered jumper wire between the black (BK) terminal in the center section and the open connection in the rear section, if motor does not operate, reverse the jumpers in the rear section. If motor still does not operate, either the harness or complete three motor assembly should be replaced.

(12) If all motors and the seat operate properly

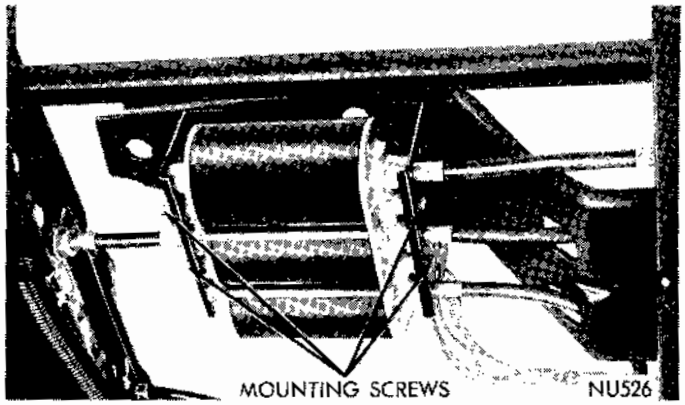

FIG. 4 - Mounting Screw Location

this indicates that the switch is bad and should be replaced. For additional wiring diagrams see "Wiring Diagram" section at end of this group.

SEAT ASSEMBLY AND ADJUSTER

Removal

(1) Disconnect battery ground cable.

(2) From underneath vehicle remove mounting nuts holding seat assembly to floor pan.

(3) Tilt seat and disconnect wiring harness.

(4) Remove assembly from vehicle.

Installation

(1) Position seat assembly in vehicle.

(2) Connect wiring harness.

(3) From underneath vehicle install and tighten mounting nuts.

(4) Connect battery ground cable and check seat operation.

ADJUSTER

Removal

(1) Remove seat assembly from vehicle following procedure outlined under, "Seat Assembly and Adjuster."

(2) Lay seat on its back on some clean object.

(3) Remove bolts attaching adjuster to seat assembly.

Installation

(1) Lay seat on its back on some clean object.

(2) Position adjuster to seat assembly and install attaching bolts.

(3) Install seat assembly following procedure outlined under "Seat Assembly and Adjuster."

MOTOR

Removal

CAUTION: Anytime the motor, cable and housing assemblies or vertical and horizontal transmis-

MyMopar.com

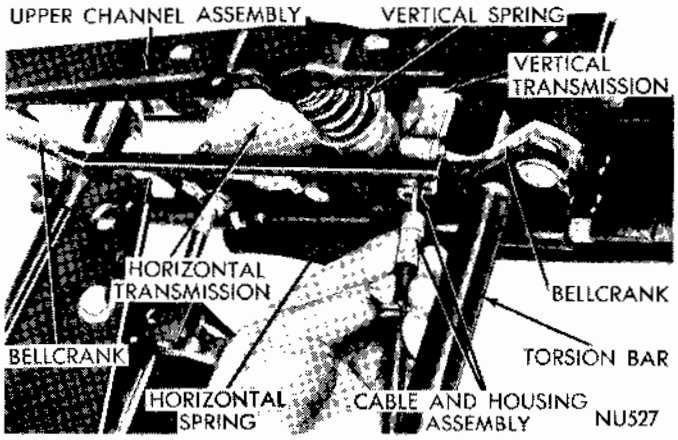

Fig. 5 - Removing or Installing Cable and Housing.

sion assemblies require maintenance, the assemblies must be synchronized to insure easy and proper operation.

(1) Remove seat assembly from vehicle following procedure outlined under "Seat Assembly and Adjuster."

(2) Lay seat assembly on its back on some clean object.

(3) Remove bolt which holds motor to support (Fig. 3). Then remove mounting (Fig. 4) screws.

(4) Carefully disconnect housings and cables from motor assembly.

Installation

(1) Place motor assembly into position.

(2) Carefully connect cables and housings to motor assembly.

(3) Install mounting screws.

(4) Install bolt holding motor assembly to adjuster.

(5) Install seat assembly following procedure outlined under, "Seat Assembly and Adjuster."

CABLE AND HOUSING

Removal

CAUTION: Anytime the motor, cable and housing assemblies or vertical and horizontal transmission assemblies require maintenance, the assemblies must be synchronized to insure easy and proper operation.

It is recommended that anytime a cable is to be replaced that the motor assembly be removed also for ease of replacement.

(1) After motor has been disconnected. Remove corbin clamp from cable housing then slide cable and housing out of connector (Fig. 5).

Installation

(1) Insert cable and housing into connector and install corbin clamp.

(2) Install motor assembly.

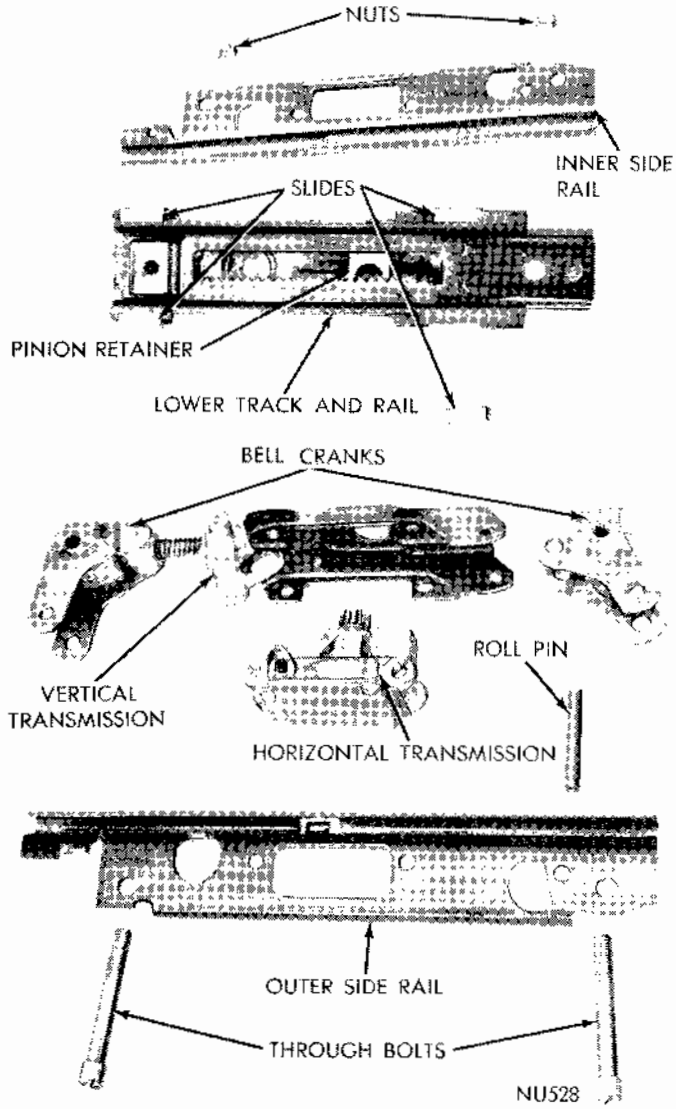

Fig. 6 - Side Rail (Disassembled)

HORIZONTAL AND VERTICAL TRANSMISSIONS

Removal

CAUTION: Anytime the motor, cable and housing assemblies or vertical and horizontal transmission assemblies require maintenance, the assemblies must be synchronized to insure easy and proper operation.

(1) Remove seat assembly from vehicle following procedure outlined under, "Seat Assembly and Adjuster."

(2) Remove motor assembly following procedure outlined under, "Motor."

(3) Fasten a 10 inch "C" clamp from the mounting base assembly to the upper channel assembly just tight enough to keep it in place while removing cotter key and the front (5/16 inch)

MyMopar.com

clevis pin.

(4) After clevis pin is removed slowly release the tension on the vertical spring.

(5) Remove cotter key and rear (3/8 inch) clevis pin and upper channel assembly.

(6) Remove horizontal spring.

(7) Remove the through bolts from each end of the side rail assembly.

(8) Remove the through bolts from the transmission assemblies and separate rails and transmission assemblies (Fig. 6).

Installation

During assembly constant care should be exercized to keep both track and rail assemblies synchronized.

(1) Position transmission assemblies between side rails and install through bolts and nuts.

(2) Locate roll pin and install through bolts in each end of assembly.

(3) Install horizontal spring.

(4) Position rail assemblies at end of torsion bars. Line up holes and upper channel and install rear (3/8 inch) clevis pin and cotter key.

(5) Insert vertical spring and apply pressure with "C" clamp just enough to align holes in mounting base and upper channel. Install front (5/16 inch) clevis pin and cotter key.

(6) Install motor assembly following procedure outlined under "Motor."

(7) Install seat assembly following procedure outlined under, "Seat Assembly and Adjuster."

CONVERTIBLE TOP LIFT

TOP LIFT (CONVERTIBLE)

Electrical Tests

Control Switch

Refer to Figure 1 and appropriate wiring diagram (See "Wiring Diagrams") and disconnect red wire at switch. Hold firmly against yellow wire terminal on switch. The top (if raised) should start to lower. Repeat test with the brown wire. The top (in lowered position) should start to rise. If top operates during these tests, but fails to operate when the control switch lever is moved to **"UP"** or **"DOWN"** position, the switch is at fault and should be replaced. If the top fails to operate during these tests, inspect and test wires between switch and motor.

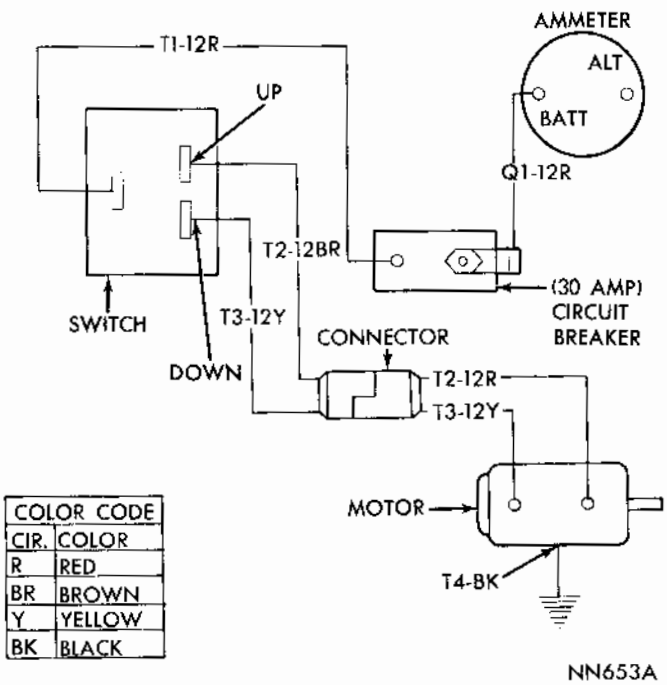

COLOR CODE	
CIR.	COLOR
R	RED
BR	BROWN
Y	YELLOW
BK	BLACK

Fig. 1 - Wiring Circuit

Circuit Breaker

Disconnect the wire harness connector at the motor and connect one wire of test light to brown wire and the other to a good body ground. Position the instrument panel switch in the **"UP"** position. The bulb should light. Repeat this test with the yellow wire but position the switch in the **"DOWN"** position. If the bulb fails to light either time and wire continuity has been established, replace the circuit breaker.

Pump Motor

Should the test bulb light on one wire but not the other, inspect wire harness for a broken wire. If the bulb lights in both tests, place one wire of the test light to the black wire terminal (ground) on the motor and the other wire to a good body ground. Position the switch in either **"UP"** or **"DOWN"** position. If bulb should light inspect for a poor ground connection or broken black wire. If the bulb does not light and wire harness continuity has been established, test black wire with a needle type connector as close to motor as possible without touching motor. If bulb fails to light, replace the motor.

MyMopar.com

TAIL GATE WIPER WASHER SYSTEM

INDEX

	Page
General Information	37
Motor Pump	38
Service Diagnosis	37
Washer Reservoir	38
Wiper Blade—Replacement	38

GENERAL INFORMATION

The tail gate wiper washer system (Fig. 1) is a mechanically activated squeegee wiper with an electric motor driven washer pump for applying water to the tail gate glass.

Operation-

The tailgate glass may be cleaned by:

(1) Lowering the glass by activating the tail gate switch.

(2) Activate the tail gate washer switch.

(3) Raising the glass by activating the tail gate switch. The wiped area is accomplished by using two 18 in. flexible wiper blades, end to end.

When the glass is lowered to its bottom position an actuator arm is activated which permits the spring loaded blades to move to an "on glass" position. When the glass is raised to its upper limit, the actuator arm is again activated causing the wiper blades to go to an "off glass" position. This permits the blades to remain in the "off glass" (free) position until the glass is again lowered.

Washer fluid may be applied (as required) to the glass surface (with glass in lower position) by an electric driven pump, supplying nozzle assemblies located inside the upper part of the tail gate.

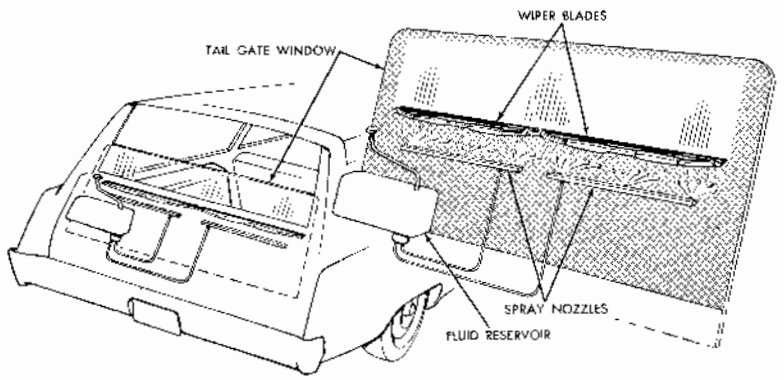

Fig. 1 - Tailgate Window Washer and Wiper System

SERVICE DIAGNOSIS

Condition	Possible Cause	Correction
INTERMITTENT OPERATION OF WASHER.	(a) Loose wiring connection.	(a) Tighten connections and repair as necessary.
	(b) Faulty washer push button switch.	(b) Replace switch.
	(c) Faulty motor.	(c) Replace motor and pump assembly.
PUMP INOPERATIVE MOTOR RUNS.	(a) Nozzle jets plugged.	(a) Clean nozzle jets.
	(b) Broken or loose hose.	(b) Replace hose.

MyMopar.com

SERVICE DIAGNOSIS

Condition	Possible Cause	Correction
	(c) Faulty pump.	(c) Replace motor and pump assembly.
PUMP ASSEMBLY INOPERATIVE.	(a) Poor ground.	(a) Clean ground wire terminal and tighten mounting screw.
	(b) Loose wiring terminals.	(b) Tighten terminals.
	(c) Broken wires.	(c) Repair or replace wires.
	(d) Faulty switch.	(d) Replace switch.
	(e) Faulty motor.	(e) Replace motor and pump assembly.
WIPER BLADES WILL NOT GO ONTO GLASS.	(a) Loose control arm.	(a) Repair control arm.
	(b) Torsion springs broken.	(b) Replace springs.
WIPER BLADES WILL NOT COME OFF OF GLASS.	(a) Loose control arm.	(a) Repair control arm.
	(b) Actuator pin loose.	(b) Reinstall pin.

SERVICE PROCEDURES

Wiper Blade Replacement (18 Inch Blade) —(Fig.2)

(1) Lower the tail gate glass to full bottom position.
(2) Open tail gate to horizontal position.
(3) Remove inner trim panel of tail gate.
(4) Raise glass approximately half way, after tripping limit switch.
(5) Position the yoke for "off glass" condition.
(6) Remove wiper control arm assembly from glass.
(7) Disengage glass from window regulator arms and remove glass.
(8) Position the yoke for "on glass" condition.
(9) Remove and replace blades. (Locking Tab Down)
(10)**Do Not get lubricant on new wiper blades.**
(11) Position the yoke for "off glass" condition.
(12) Install glass and assemble to window regulator.
(13) Connect wiper control arm assembly to glass.
(14) Install inner trim panel.
(15) Lower glass to full bottom position and check operation of wiper system.

Washer Reservoir and/or Motor Pump Assembly—

Removal

(1) Lower tail gate glass to bottom position and open tail gate to horizontal position.
(2) Remove tail gate inner trim panel.
(3) Raise glass sufficient to allow access to reservoir assembly.
CAUTION: Do not exceed normal height of glass travel.
(4) Remove washer hoses from both outlets at washer pump, being careful not to break outlets; identify hoses.
(5) Disconnect one wire to washer motor.
(6) Remove three mounting screws supporting reservoir and remove rubber filler hose at reservoir.

Installation

(1) Position reservoir and install mounting screws.
(2) Connect washer hoses at washer pump, making sure hoses are routed to the correct outlets.
(3) Connect rubber filler hose at reservoir.
(4) Reconnect the wire at washer motor.
(5) Install tail gate inner panel.
(6) Lower tail gate glass to bottom position and recheck motor and pump operation.

Washer Nozzle Replacement

(1) Perform steps 1 through 8 under "Wiper Blade Replacement".
(2) Remove the screws mounting the two nozzle assemblies.
(3) Inspect and clean nozzles. Replace if nozzles are damaged.
(4) Position nozzles and install mounting screws.
(5) Connect washer hose to nozzles.
CAUTION: Do not break nozzle inlets. Do not get lubricant on wiper blades.
(6) Position yoke for "off glass" condition.
(7) Install glass and attach wiper control arm.
(8) Run glass to bottom position.
(9) With tail gate closed, check operation of new nozzles.
(10) If operation is now satisfactory, install inner tail gate trim panel.

MyMopar.com

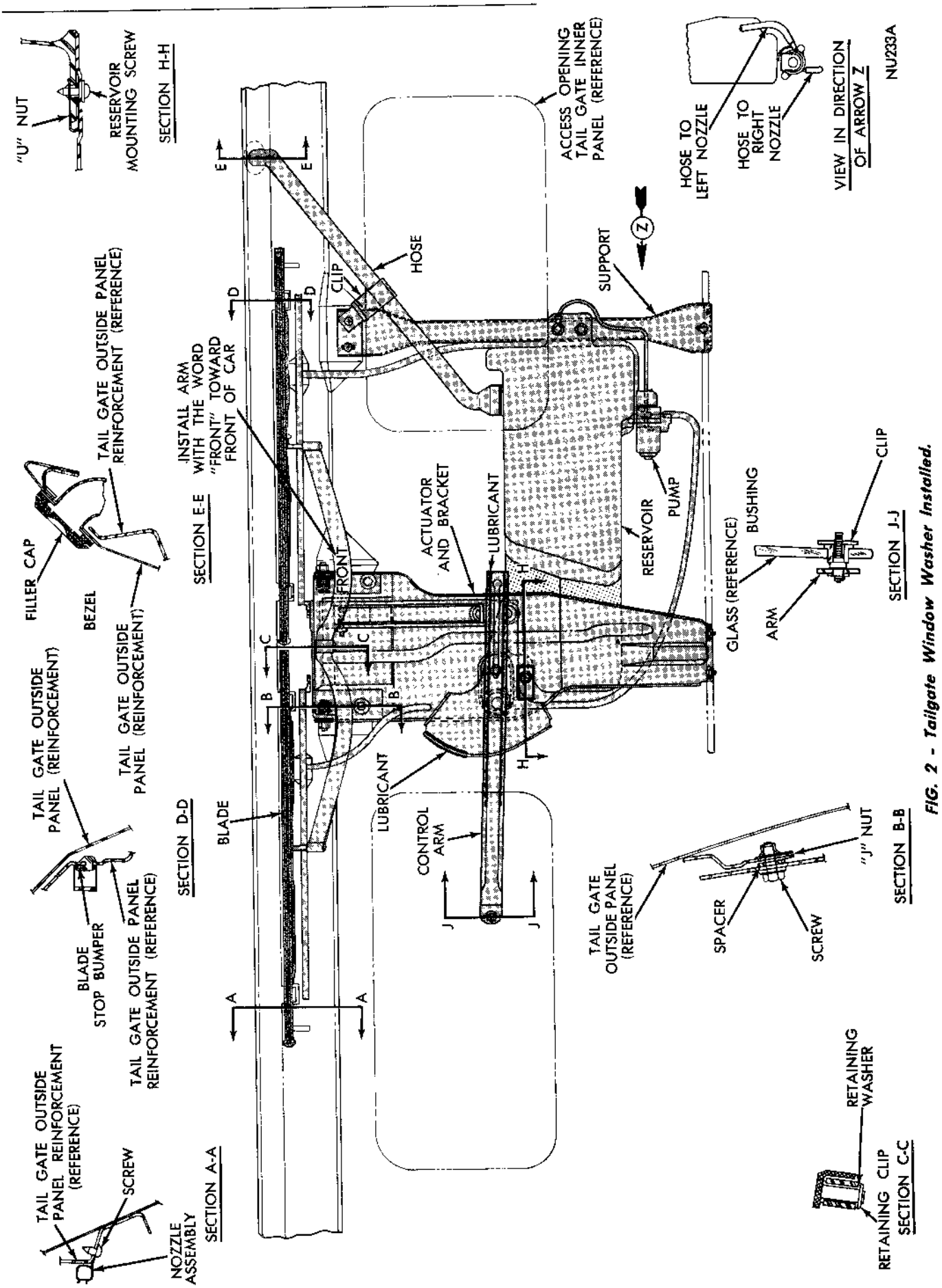

FIG. 2 - Tailgate Window Washer Installed.

MyMopar.com

SPECIFICATIONS

BULB CHART

	Dart	Challenger	Challenger (Rallye)
Air Conditioner Control and Auto-Temp	**1445	**1815	**1815
Ash Receiver	**1892	**1445	**1445
Back-up Lights	1156	1156	1156
Brake System Warning Indicator	57	57	57
Clock	—	*	*
Courtesy Lamp	—	—	—
Dome Lamp	1004	211-1 or 1004	211-1 or 1004
Door Ajar Indicator	—	1892	1892
Fender Mounted Turn Signal Indicator	330(2)	330(2)	330(2)
Front Park and Turn Signal	1157NA(2)	1157	1157
Gear Selector Indicator (Column)	**161	**161	**161
Gear Selector With Console	**57	**57	**57
Glove Compartment	1891	1891	1891
Headlamp Switch Rheostat Value	28 OHMS	15.5 OHMS	15.5 OHMS
High Beam Indicator	158	57	57
Instrument Cluster and Speedometer	**158(4)	**1816(3)	**1893(4)
Ignition Lamp	1445	1445	1445
License Light	67	67 or 68	67 or 68
Low Fuel Indicator	—	1892	1892
Map and Courtesy Lamp	89	89	89
Oil Indicator	158	57	—
Pocket Panel Lamp	—	90	90
Radio—AM and AM with Tape	**1816	**1816	**1816
Radio — AM/FM Stereo	—	**1815	**1815
Reverse 4-Speed Transmission Indicator	53	53	53
Sealed Beam—Hi Beam (No. 1)	—	4001	4001
Sealed Beam—Hi-Lo Beam (No. 2)	—	4000	4000
Sealed Beam—Single "7"	6012	—	—
Seat Belts Indicator	53	1892 or 53	1892 or 53
Side Marker	1895(4)	1895(4)	1895(4)
Stereo Indicator	—	1445	1445
Switch Lighting	*	*	*
Tachometer	—	—	*
Tail, Stop and Turn Signal	1157(2)	1157(4)	1157(4)
Trunk and/or Under Hood Lamp	1004	1003	1003
Turn Signal Indicator (Panel)	158(2)	57(2)	57

*—Included in Instrument Cluster Lighting **—Headlamp Rheostat Dimming

MyMopar.com

BULB CHART

	Coronet/Charger	Coronet/Charger (Rallye)	Polara/Monaco
Air Conditioner Control and Auto—Temp	** 53(2)	** 53(2)	*
Ash Receiver	**1445	**1445	**1445
Auxiliary Switch Lamp	—	—	1445
Back-up Lights	1156	1156	1156
Brake System Warning Indicator	158	57	57
Clock	*	*	*
Cornering Lights	—	—	1293(2)
Courtesy Lamp	—	—	90
Dome Lamp	1004	1004	211-2
Door Ajar Indicator	1892	—	57
Fender Mounted Turn Signal Indicator	330(2)	330(2)	330(2)
Front Park and Turn Signal	1157 or 1157 NA	1157 or 1157NA	1157
Gear Selector Indicator (Column)	** 161	** 161	*
Gear Selector With Console	** 57	** 57	**57
Glove Compartment	1891	1891	1891
Headlamp Switch Rheostat Value	15 OHMS	15 OHMS	24 OHMS
Headlamp Wash Indicator	—	—	1445
High Beam Indicator	158	57	1892
Instrument Cluster and Speedometer	** 158(4)	** 57(7)	1893(3)
Ignition Lamp	1445	1445	1445
License Light	67	67	67
Low Fuel Indicator	1892	1892	57
Map and Courtesy Lamp	562	562	—
Oil Indicator	158	—	57
Pocket Panel Lamp	90	90	90
Radio - AM and AM with Tape	**1816	**1816	*
Radio — AM/FM Stereo	**1815	**1815	*
Reverse 4-Speed Transmission Indicator	53	53	53
Sealed Beam - Hi-Beam (No. 1)	4001	4001	4001
Sealed Beam - Hi-Lo Beam (No. 2)	4000	4000	4000
Seat Belts Indicator	1892	1892	53
Side Marker	194(4)	194(4)	1895(4)
	Station Wag. Front 194(2) Rear 1893(2)		Station Wag. Front 1895(2) Rear 1893(2)
Stereo Indicator	—	—	1445
Switch Lighting	1892(3)	1892(3)	* or 1892
Tachometer	—	*	*
Tail, Stop and Turn Signal	1157(4) or (2)	1157(4)	1157(4)
Trunk and/or Under Hood Lamp	1003	1003	1003
Turn Signal Indicator (Panel)	158(2)	57(2)	57(2)

* — Included in Instrument Cluster Lighting ** - Headlamp Rheostat Dimming

MyMopar.com

FUSES

CAR MODEL AND AMPERE RATING

Title on Fuse Block	Dart	Challenger	Coronet/ Charger	Polara Monaco
Accessories	20	20	20	20
Console	–	20	20	20
Dome/Stop Lamps	20	20	20	20
Emergency Flasher	20	20	20	20
Heater/Air Conditioning	20	20	20	20
Instrument Lamps	3	5	5	5
Miscellaneous	–	20	20	20
Radio/Back-up Lamps	20	20	20	20
Tail Lamp/Cigar Lighter	20	–	–	–

FUSES (IN-LINE)

CAR MODEL AND AMPERE RATING

Circuit	Dart	Challenger	Coronet/ Charger	Polara/ Monaco
Courtesy Lamps (Console)	–	–	–	20
Deck Lid Solenoid	–	–	20	20
Headlamp Delay Relay	20	20	20	20
Headlamp Washer Relay	–	–	20	–
Heater/Air Conditioning Blower Motor (Tilt Column)	–	–	20	20
Spot Light Wiring	–	–	–	10
Tail Gate Lock Solenoid	–	–	20	–

CIRCUIT BREAKERS

CAR MODEL AND AMPERE RATING

Circuit	Location	Dart	Challenger	Coronet/ Charger	Polara/ Monaco
Concealed Headlamps	Integral with relay on left end of instrument panel	–	–	5	–
Convertible Top Lift	On fuse block	–	30	–	–
Door Locks	On fuse block	–	–	–	15
Front Seat Back Latch	On fuse block	–	–	–	15
Headlights	Integral with Headlamp Switch	15	20	20	20
Power Seats	On fuse block	–	–	–	30
Power Tail Gate Window	On fuse block	–	–	30	30
Power Windows	On fuse block	–	30	30	30
Tail Gate Lock	On fuse block	–	–	15	–
Windshield Wiper	Integral with wiper switch				
	2 speed Motor	6.0	6.0	6.0	6.0
	3 Speed Motor	–	–	7.5	7.5
	Variable Speed Motor	7.5	7.5	–	–

MyMopar.com

WIRING DIAGRAMS

INDEX

	Page
Body Wiring - Dart	51
Body Wiring - Demon	53
Body Wiring - Challenger	54
Body Wiring - Coronet and Charger (Except Station Wagon)	55
Body Wiring - Coronet (Station Wagon)	53
Body Wiring - Polara and Monaco (Except Station Wagon)	56
Body Wiring - Polara and Monaco (Station Wagon)	56
Console Wiring - Polara and Monaco	48
Front End Lighting Wiring - Dart	46
Front End Lighting Wiring - Challenger	46
Front End Lighting Wiring - Coronet and Charger	47
Front End Lighting Wiring - Polara and Monaco	47
Overhead Console Wiring - Challenger	48
Power Seat Back Release Wiring - Polara and Monaco	49
Power Seat Wiring - Polara and Monaco	49
Power Window Wiring - Challenger	50
Power Window Wiring - Coronet and Charger	51
Power Window and Door Lock Wiring - Polara and Monaco	52
Rear End Lighting Wiring - Coronet and Charger	57

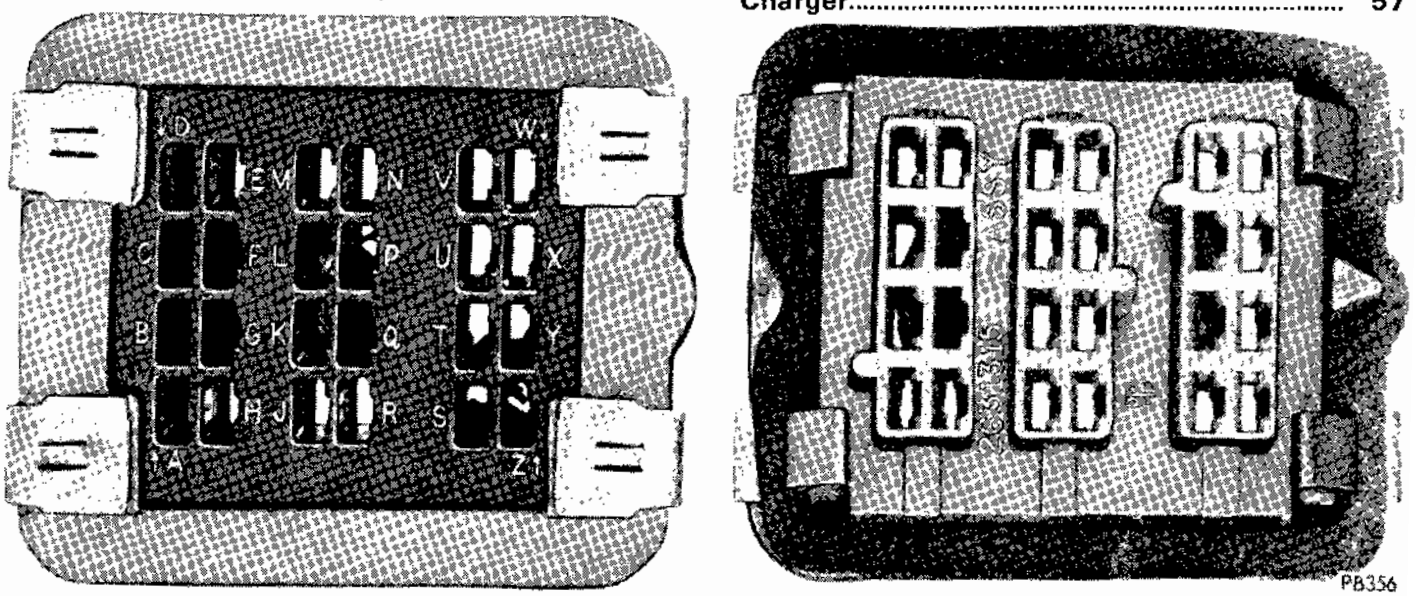

Fig. 1 - Bulkhead Disconnect - Dart

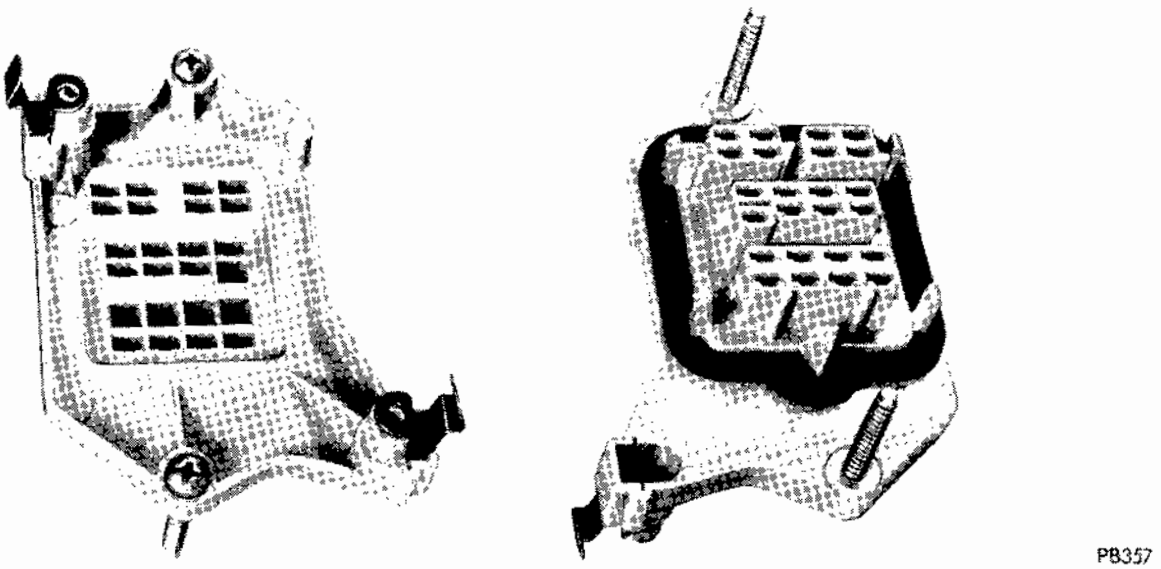

Fig. 2 - Bulkhead Disconnect - Challenger, Coronet and Charger

MyMopar.com

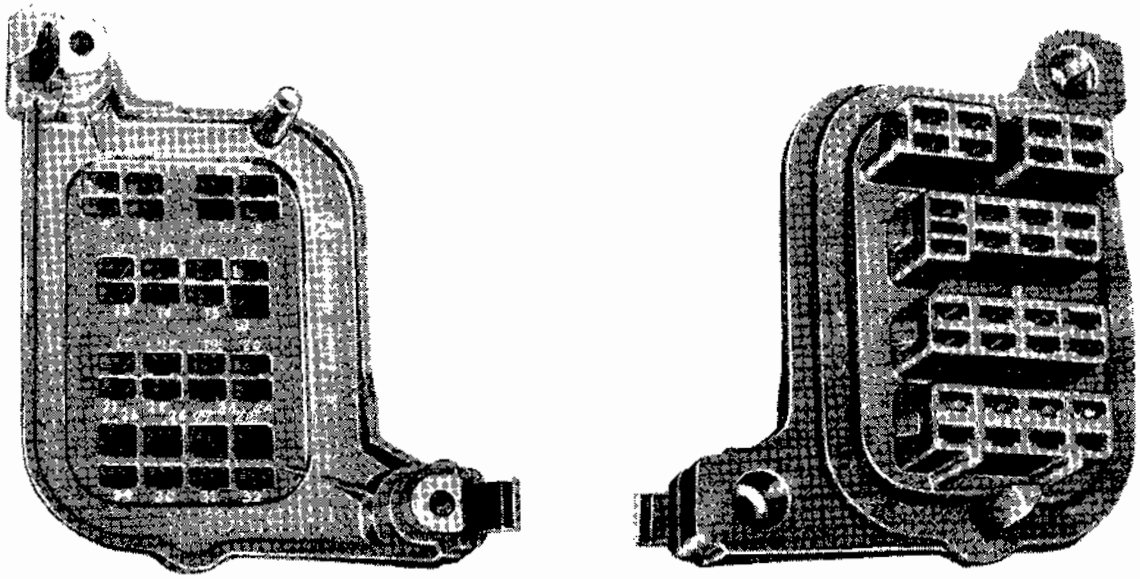

PB358

Fig. 3 - Bulkhead Disconnect - Polara, Monaco

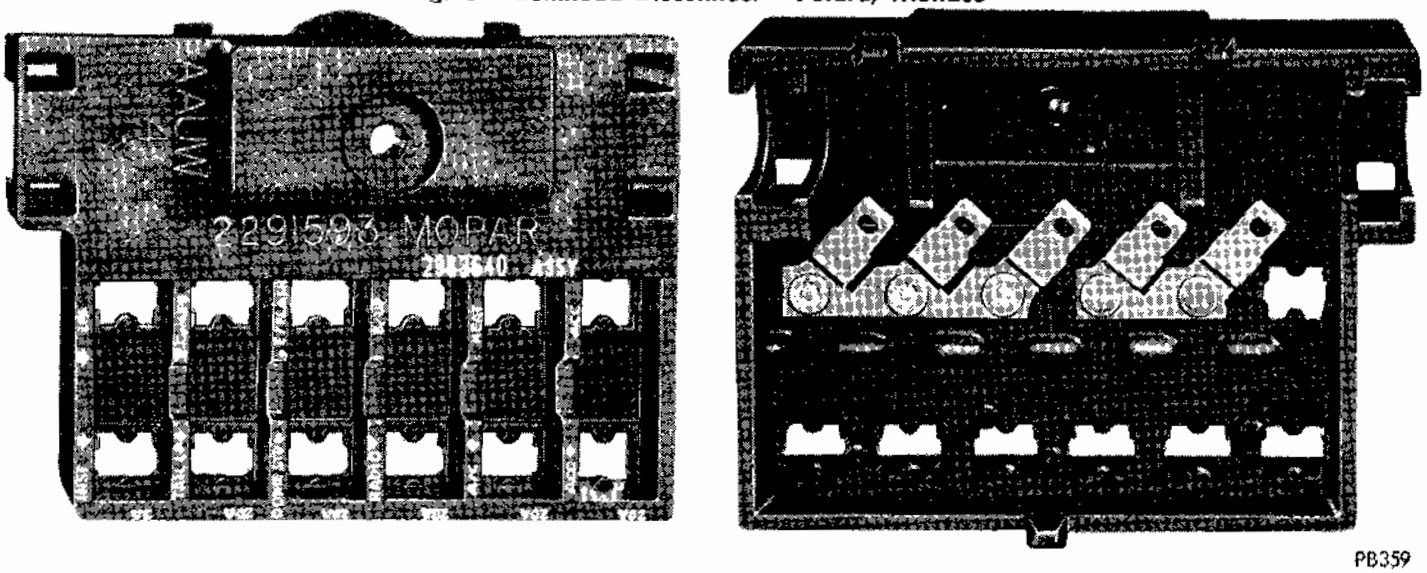

PB359

Fig. 4 - Fuse Block - Dart

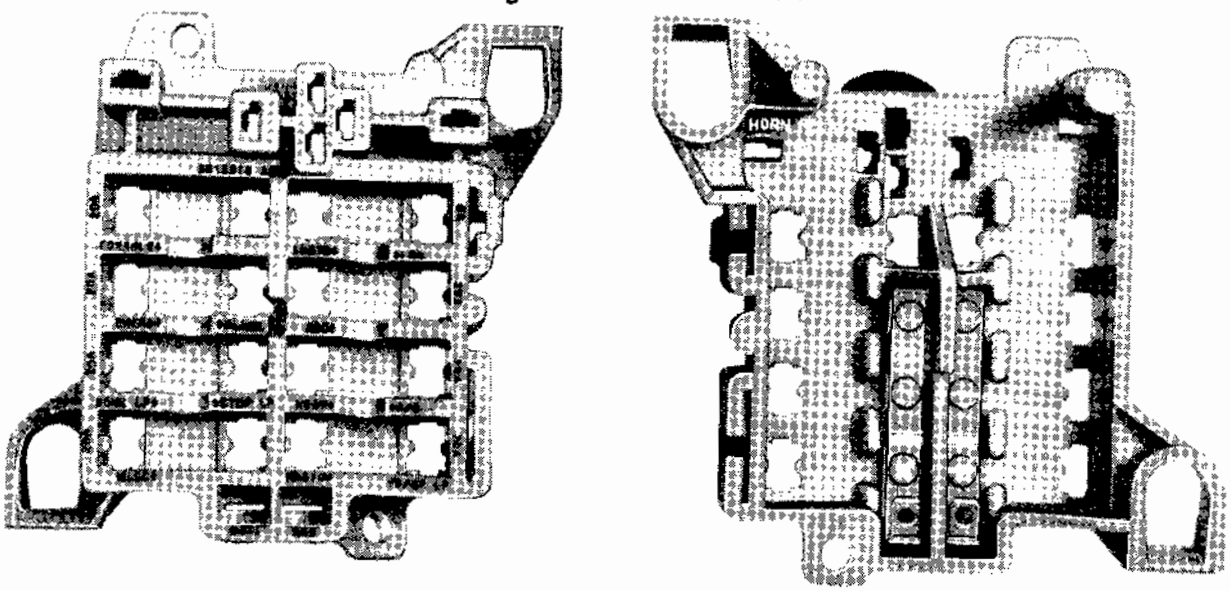

PB360

Fig. 5 - Fuse Block - Challenger, Coronet and Charger

MyMopar.com

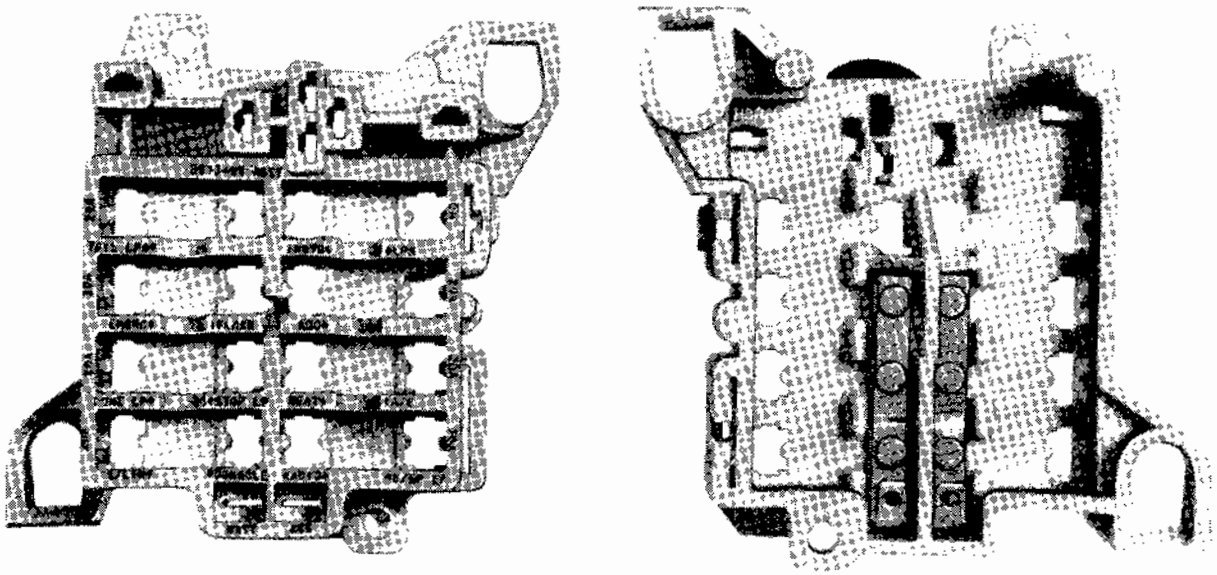

PB361

Fig. 6 - Fuse Block - Polara, Monaco

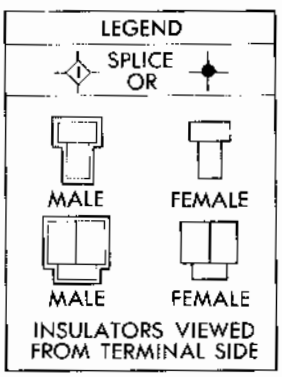

COLOR CODE	
BK	BLACK
BR	BROWN
DBL	DARK BLUE
DGN	DARK GREEN
GY	GRAY
LBL	LIGHT BLUE
LGN	LIGHT GREEN
O	ORANGE
P	PINK
R	RED
T	TAN
V	VIOLET
W	WHITE
Y	YELLOW
*	WITH TRACER

PB362

Fig. 7 - Color Code and Legend

MyMopar.com

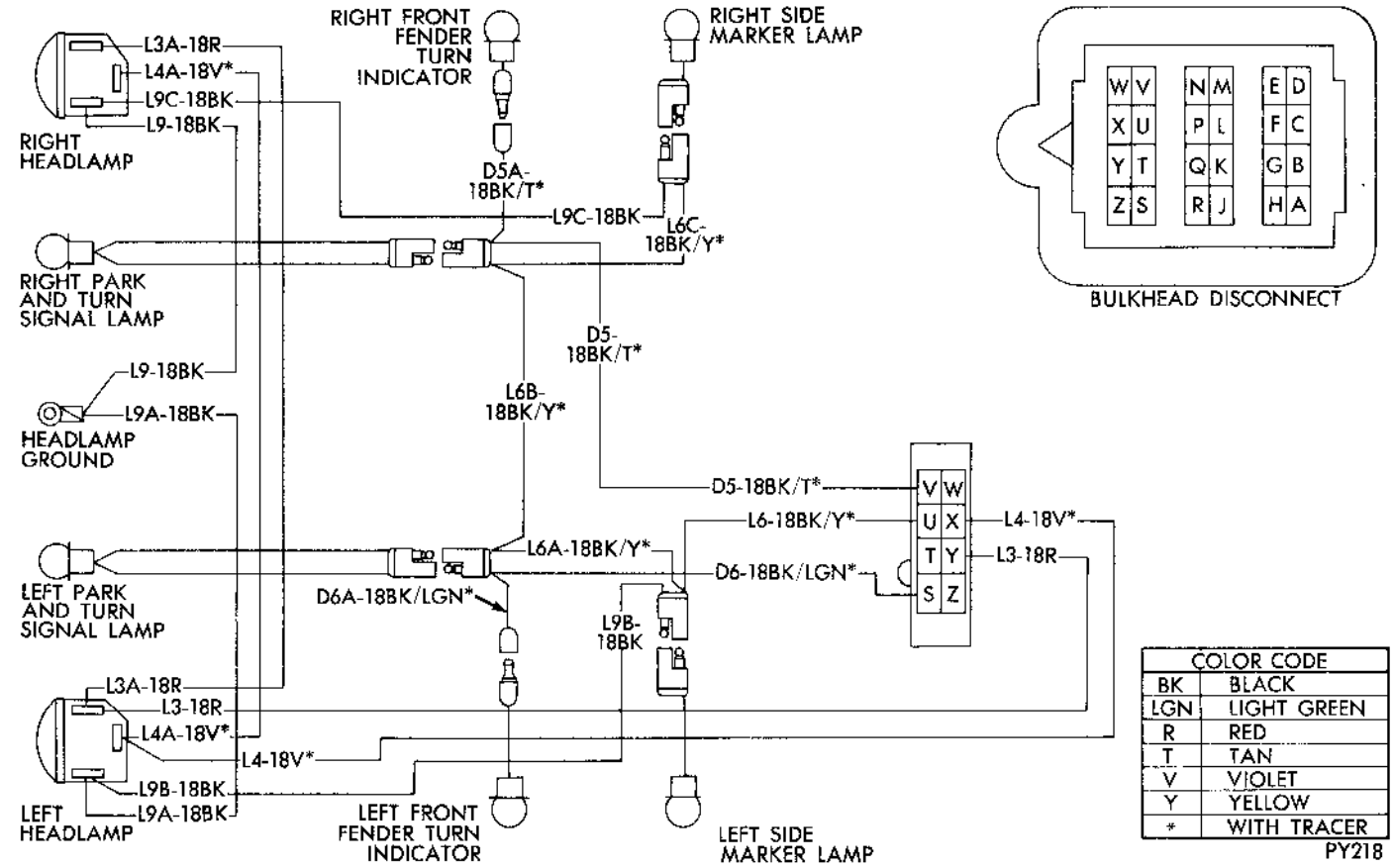

Fig. 8 - Front End Lighting Wiring - Dart

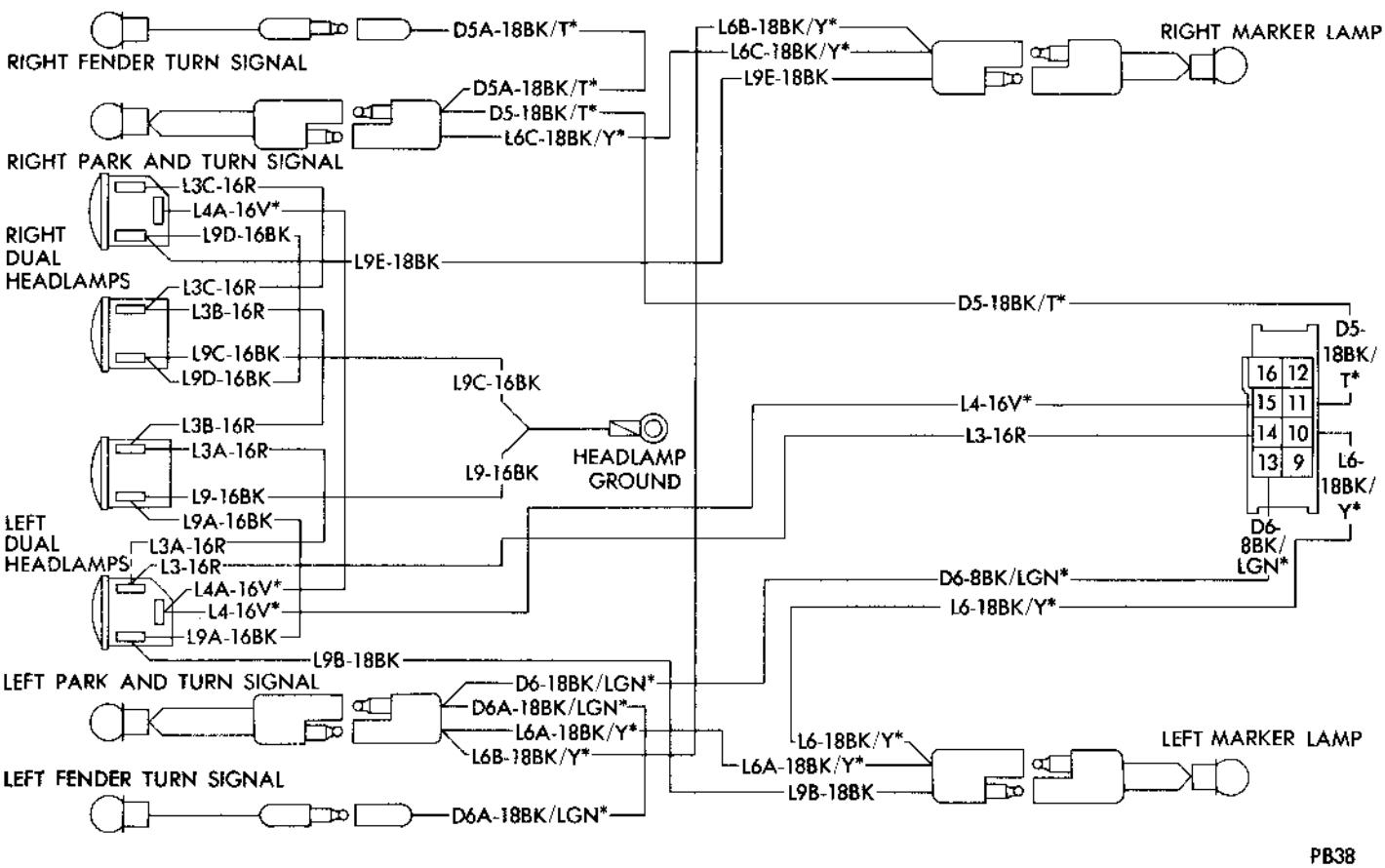

Fig. 9 - Front End Lighting Wiring - Challenger

MyMopar.com

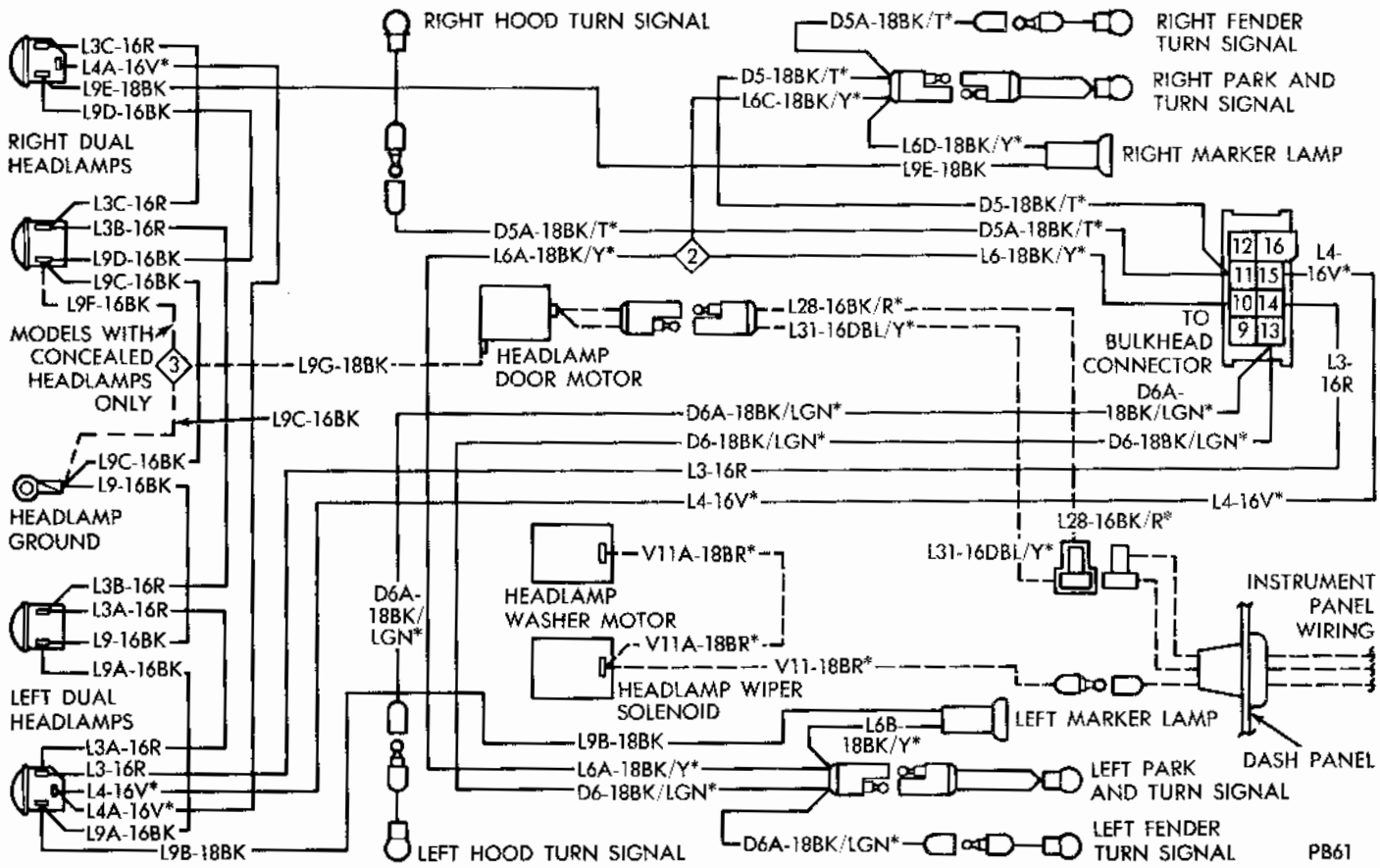

Fig. 10 - Front End Lighting Wiring - Coronet, Charger

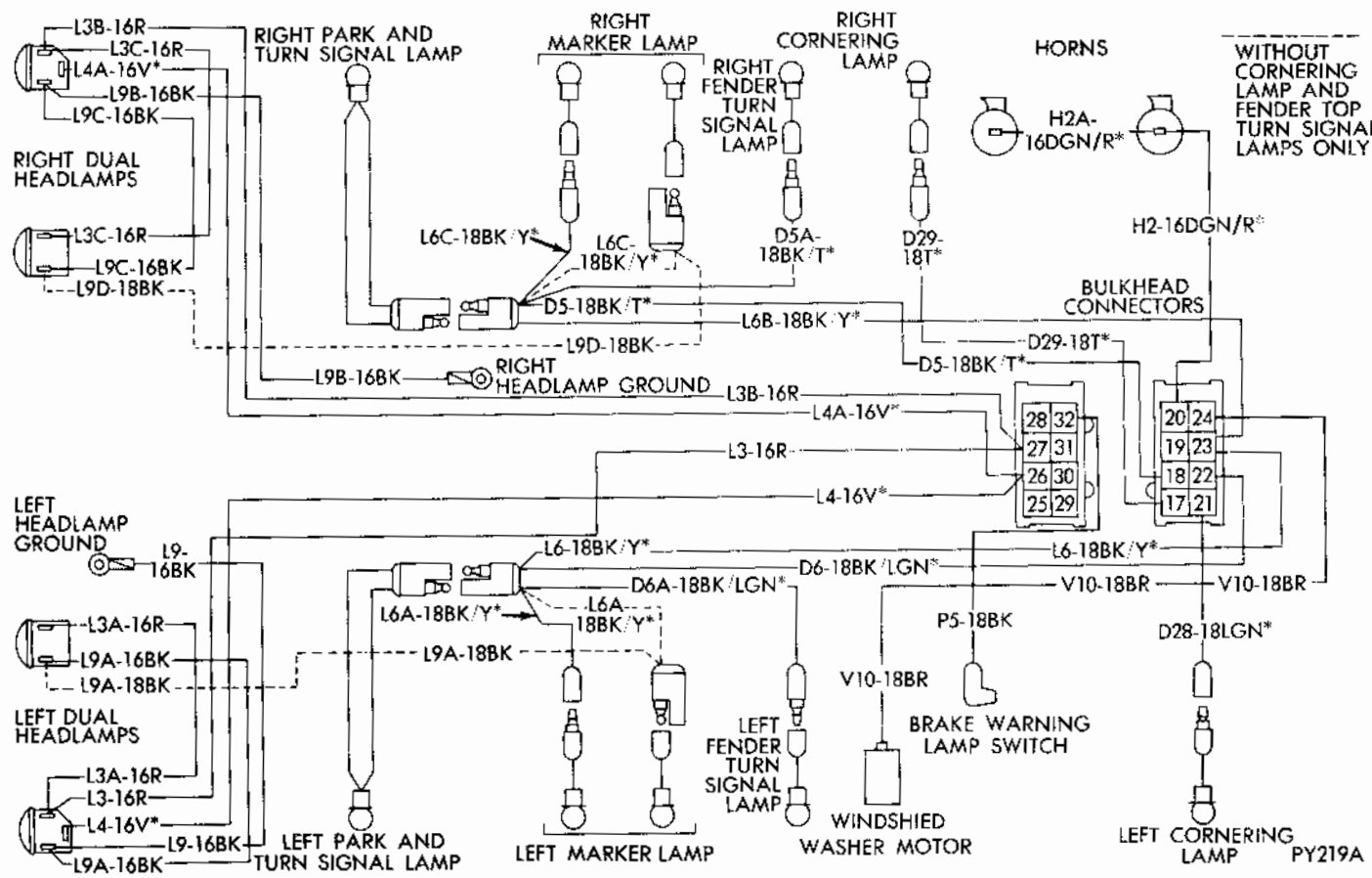

Fig. 11 - Front End Lighting Wiring - Polara, Monaco

MyMopar.com

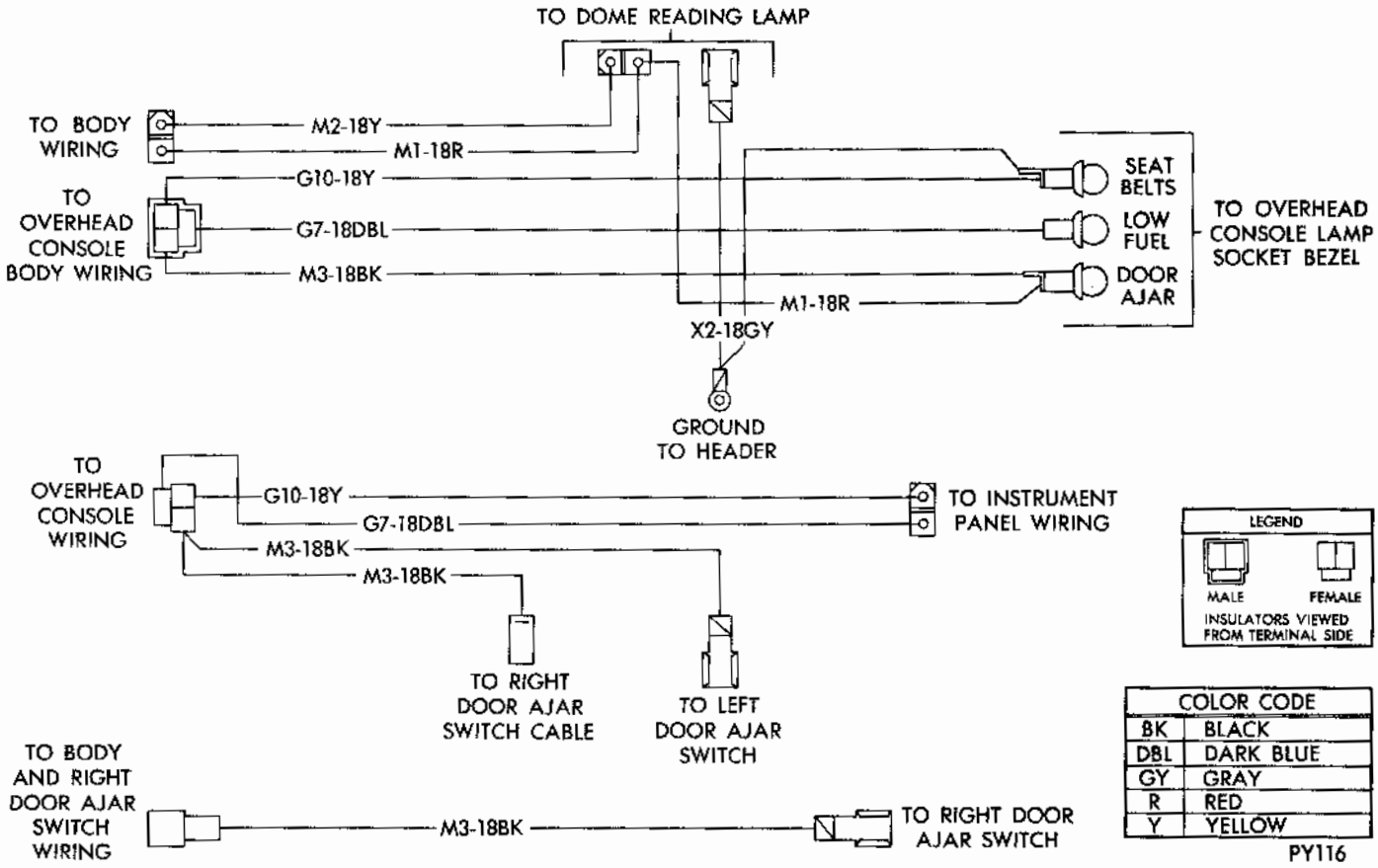

Fig. 12 - Overhead Console Wiring - Challenger

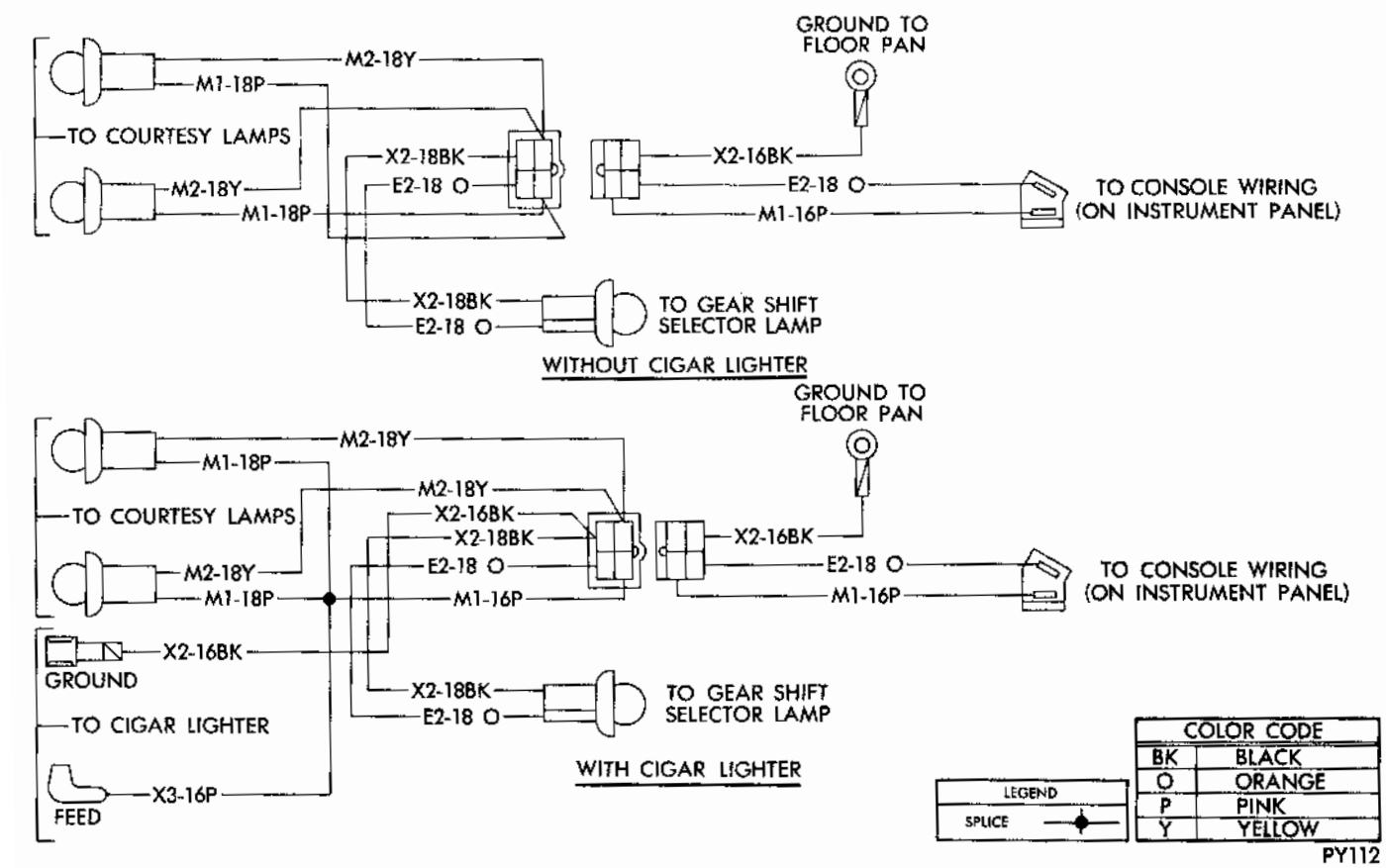

Fig. 13 - Console Wiring - Polara, Monaco

MyMopar.com

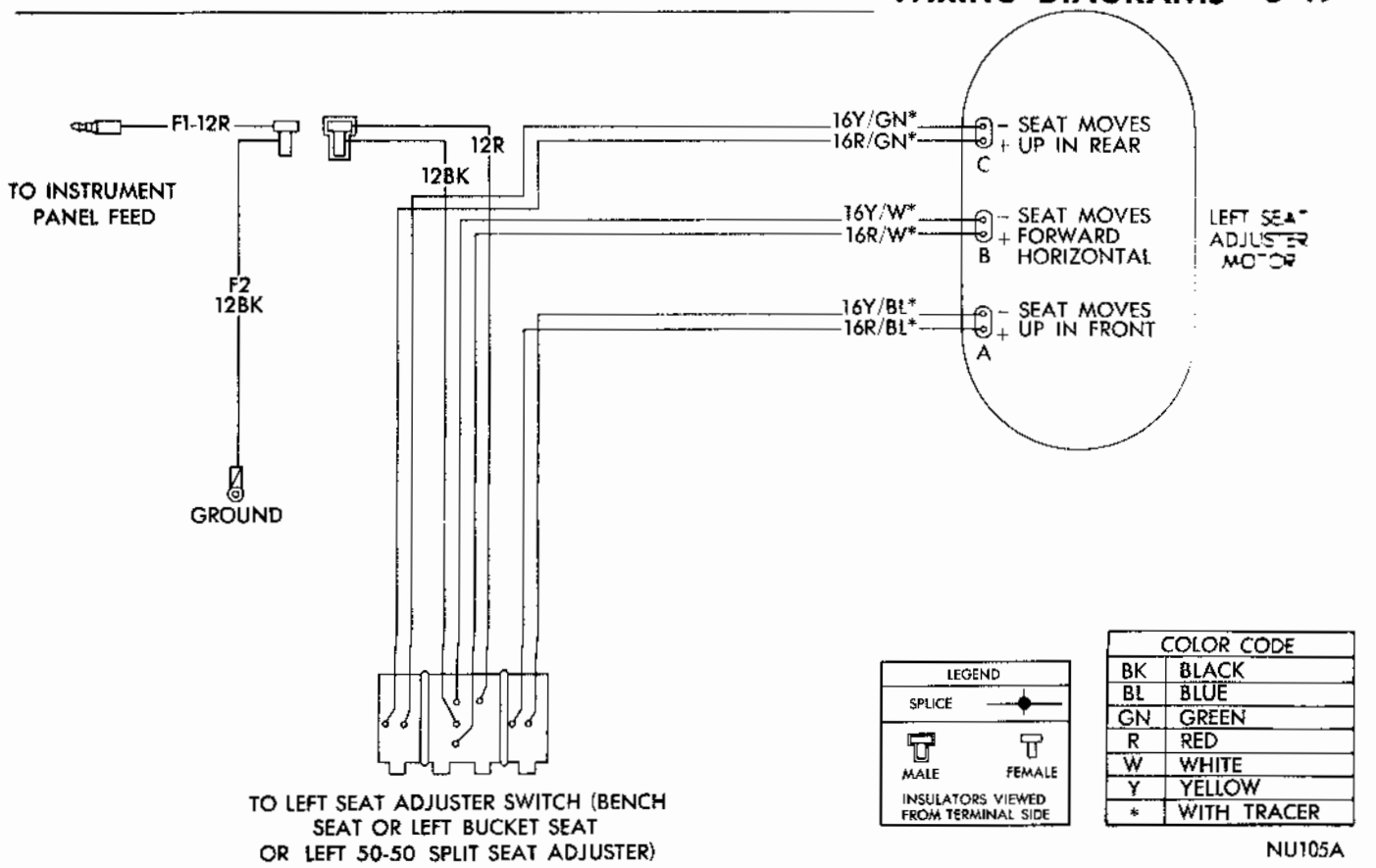

Fig. 14 - Power Seat Wiring - Polara, Monaco

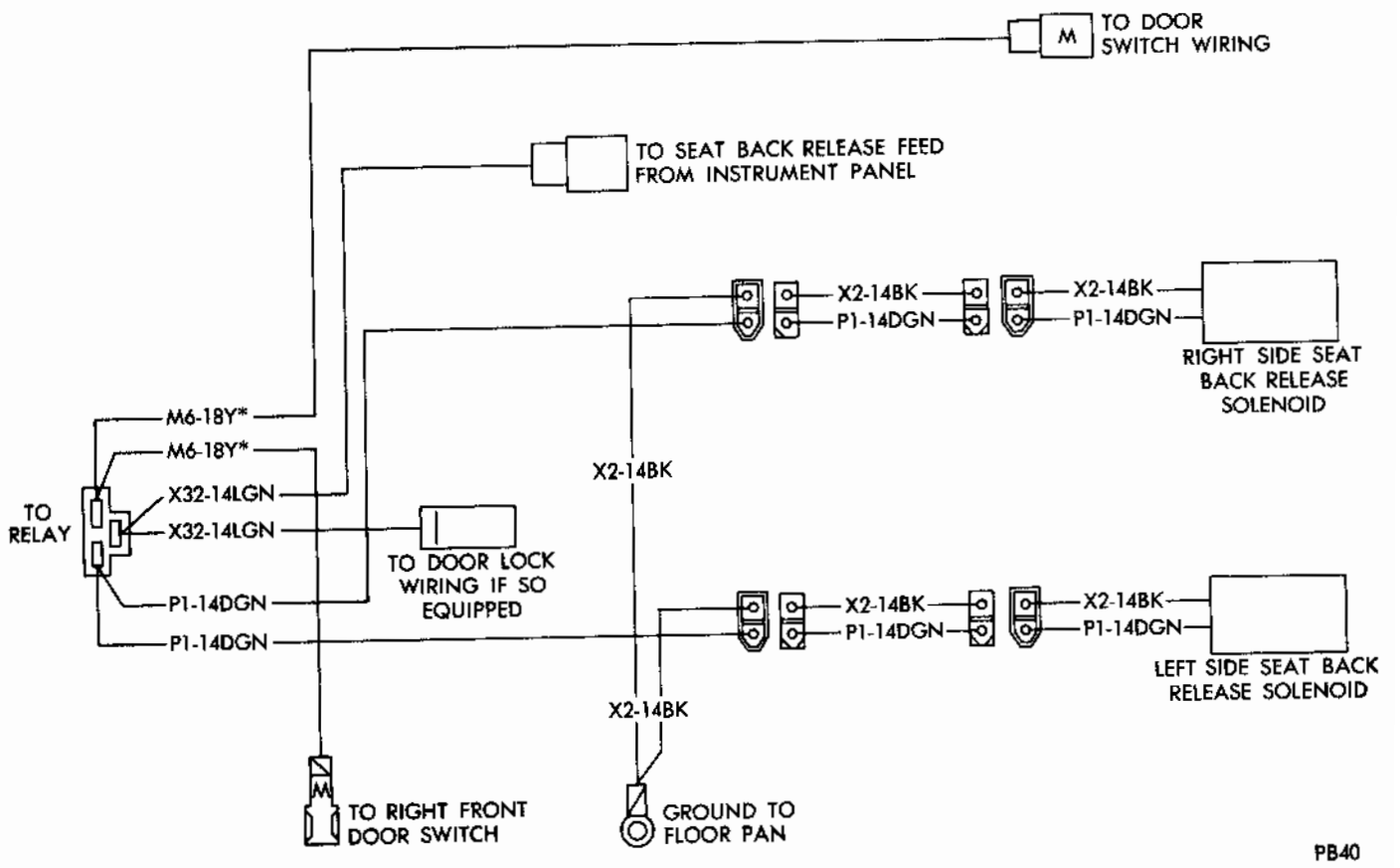

Fig. 15 - Power Seat Back Release Wiring - Polara, Monaco

MyMopar.com

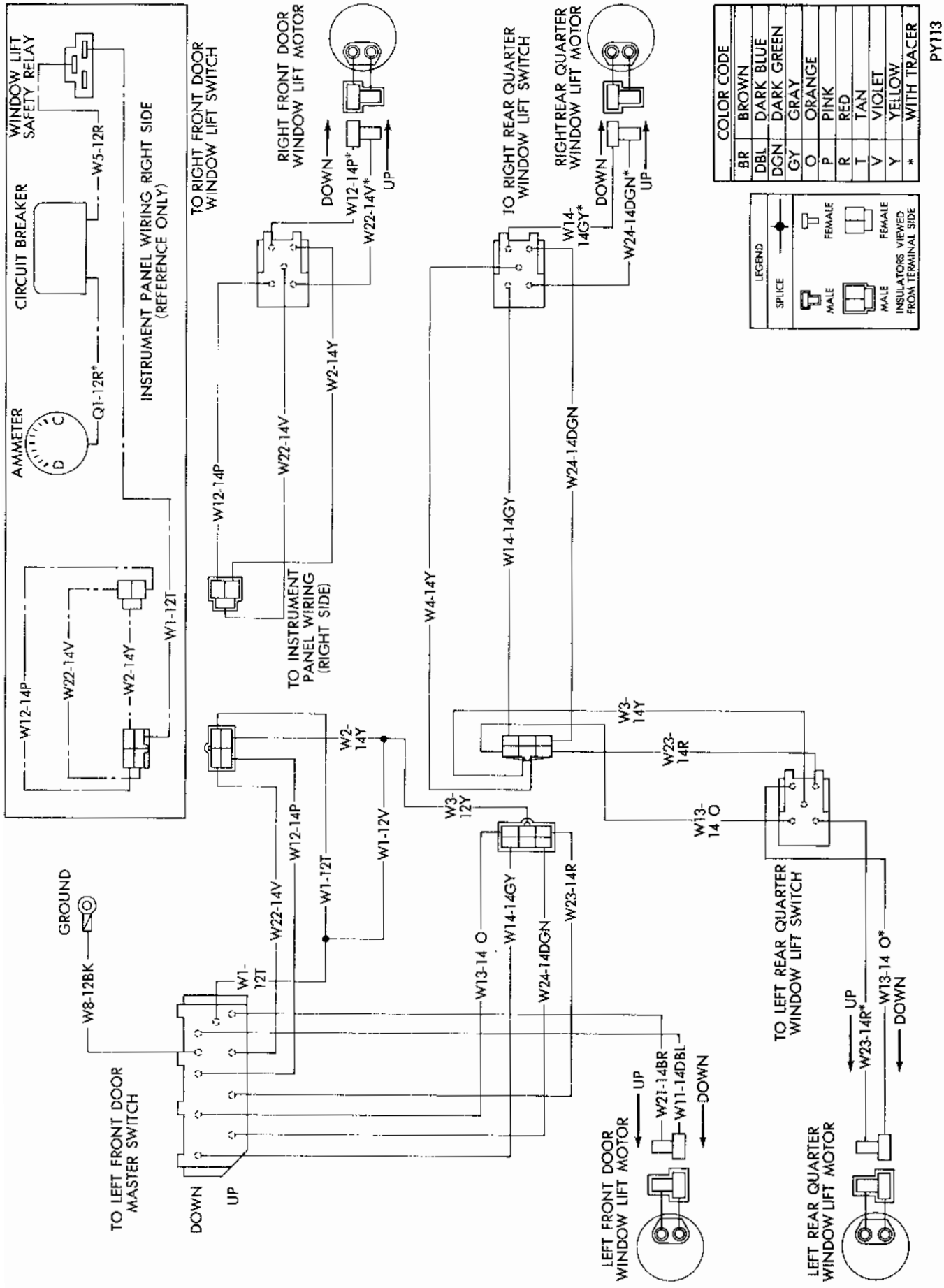

Fig. 16 - Power Window Wiring - Challenger

MyMopar.com

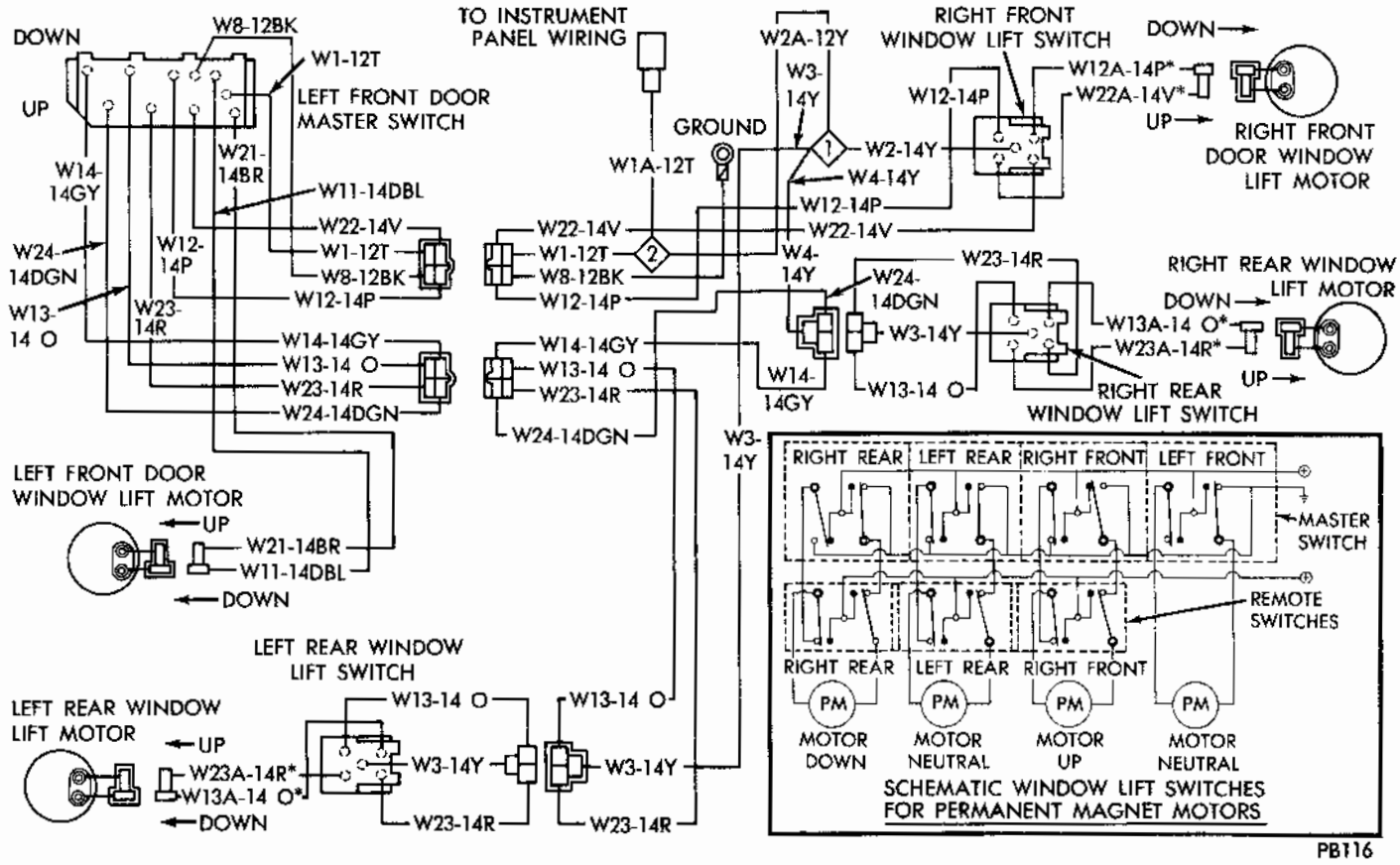

Fig. 17 - Power Window Wiring - Coronet, Charger

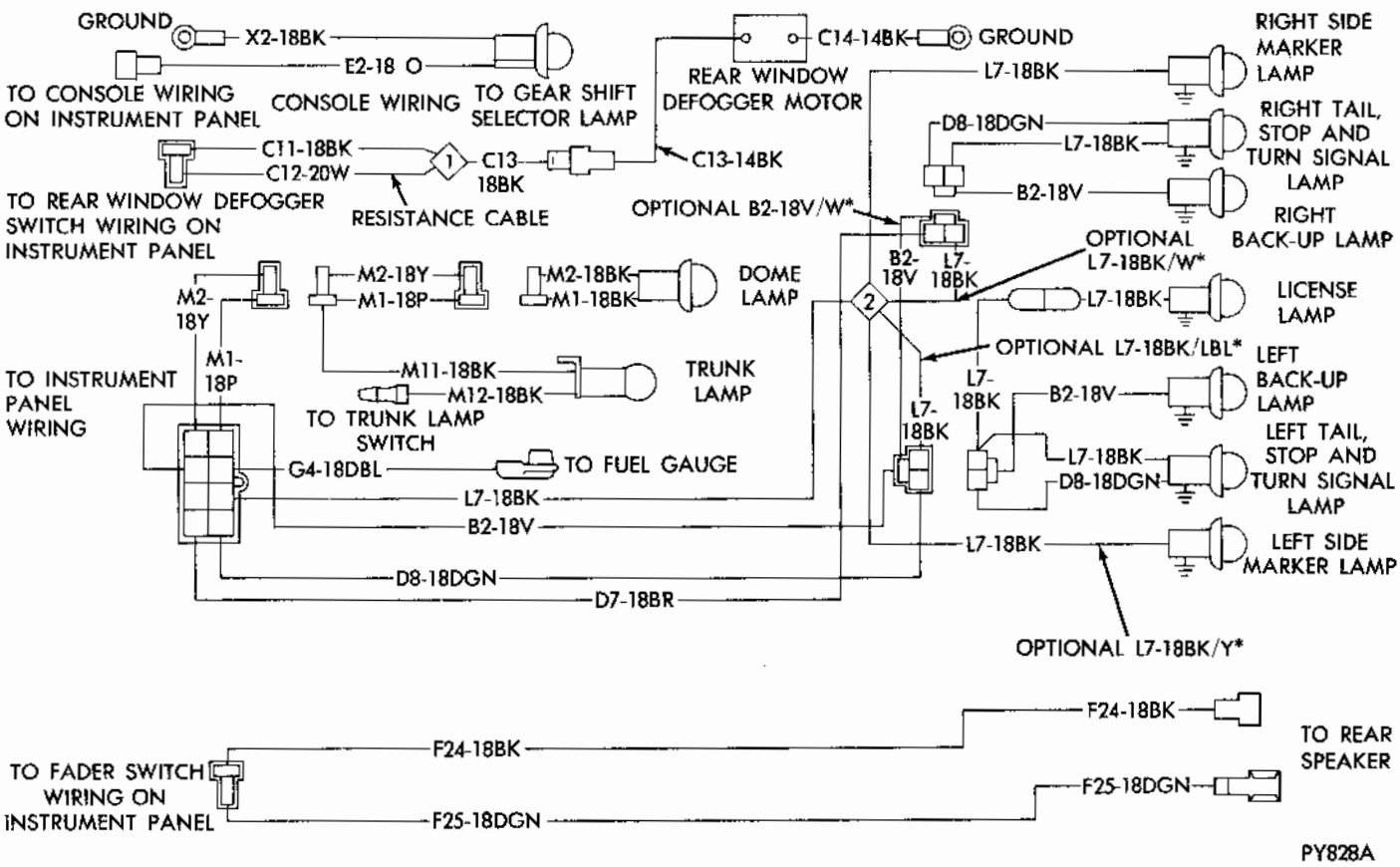

Fig. 18 - Body Wiring - Dart

MyMopar.com

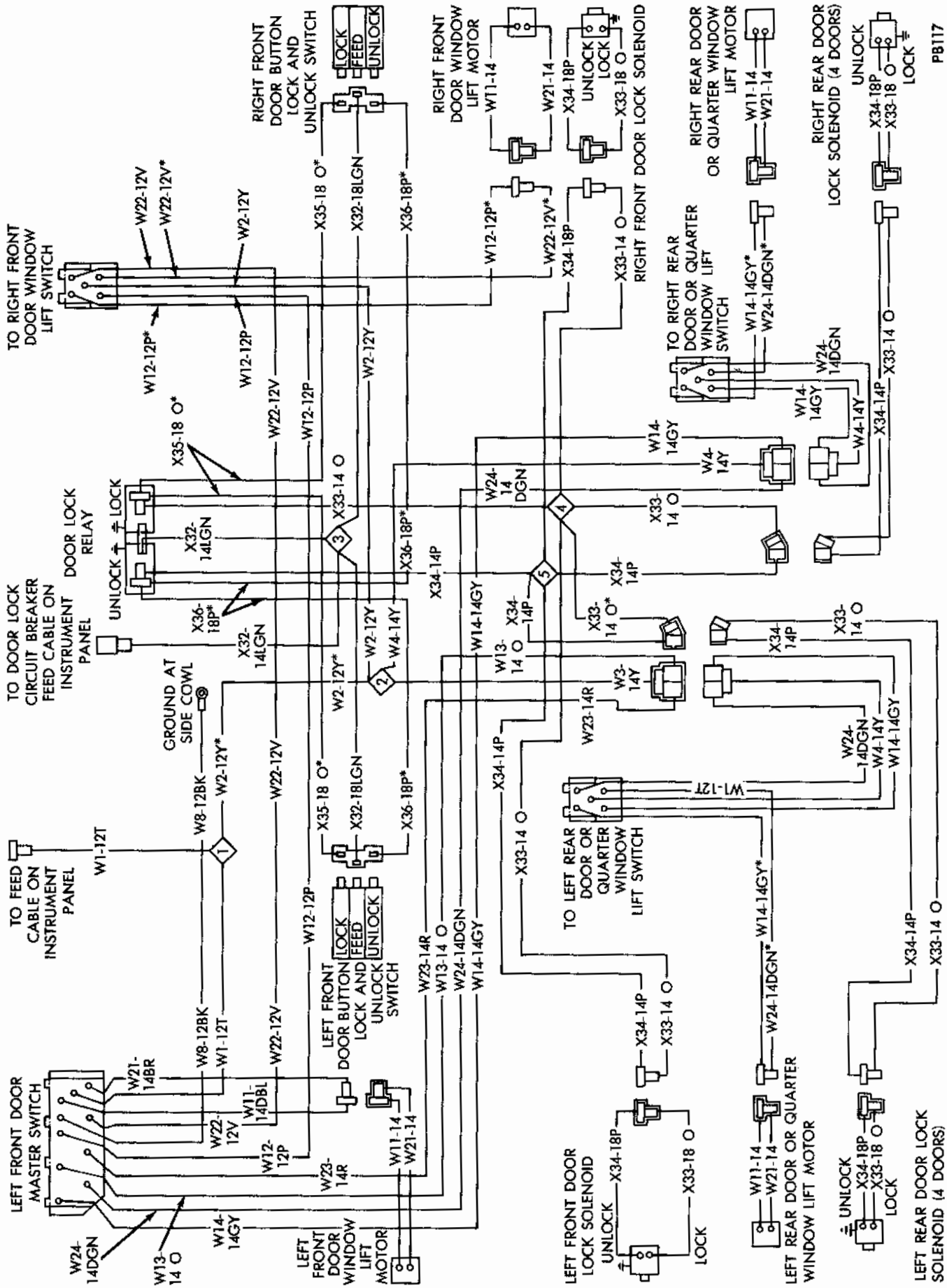

Fig. 19 - Power Window and Door Lock Wiring - Polara, Monaco

MyMopar.com

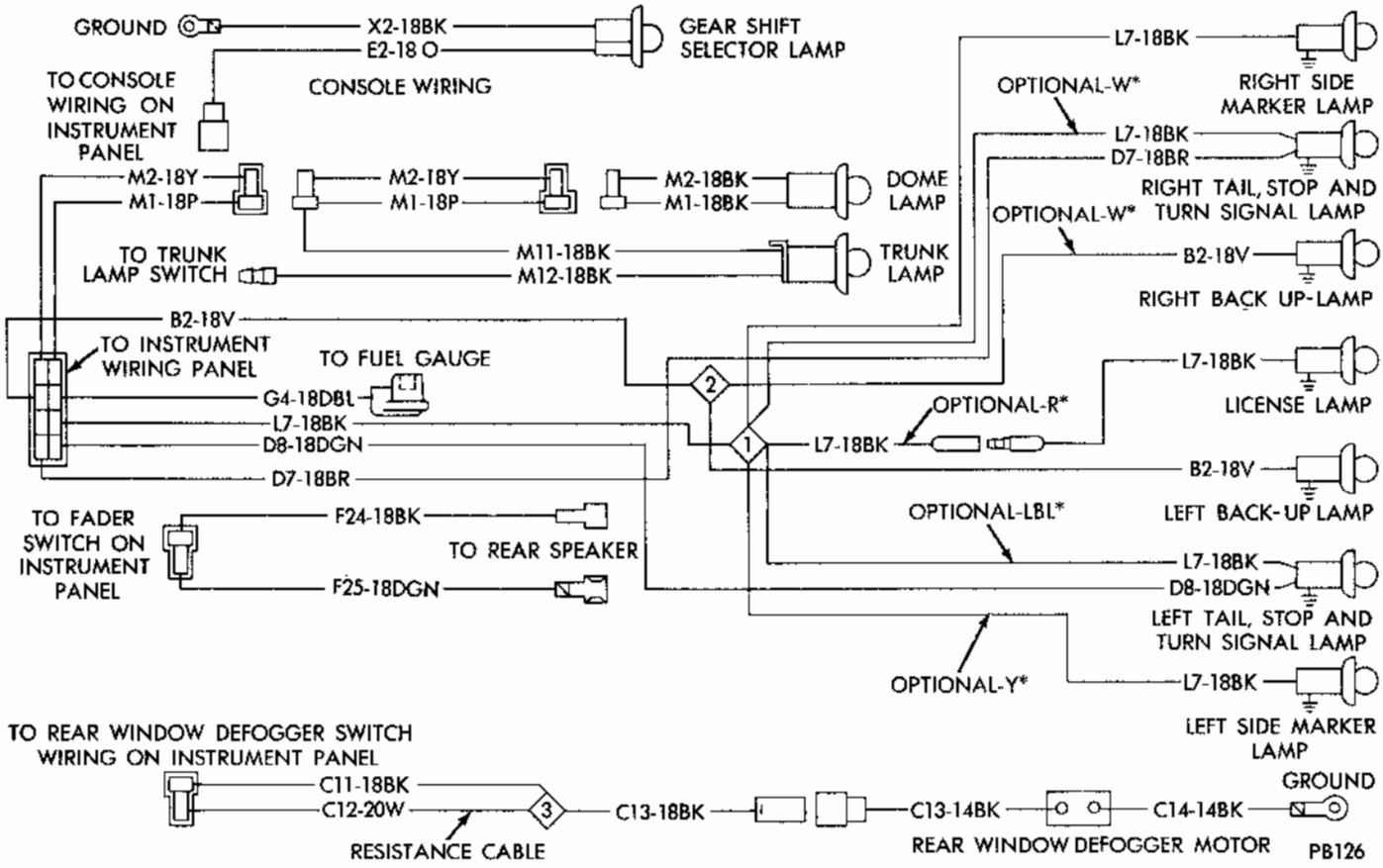

Fig. 20 - Body Wiring - Demon

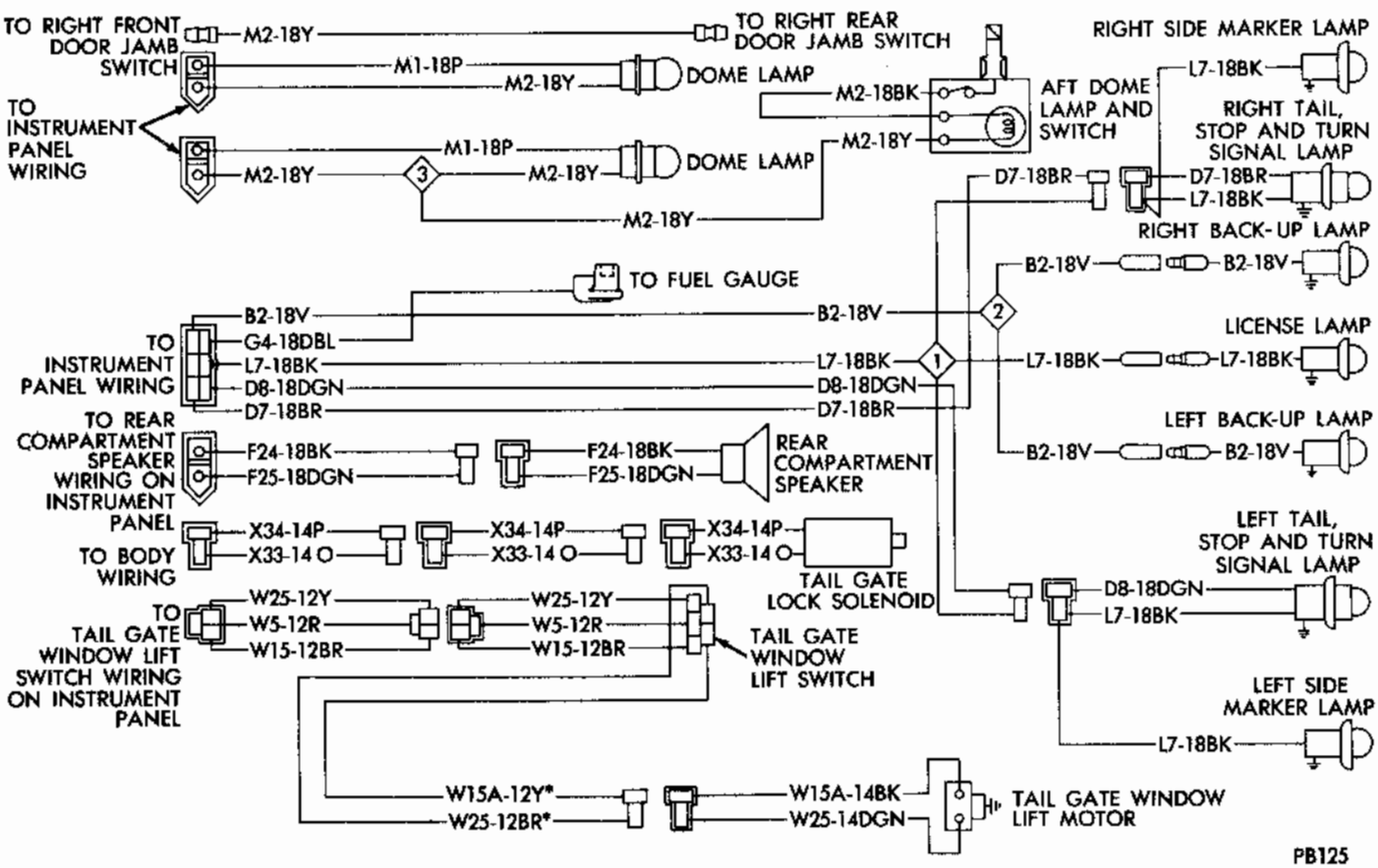

Fig. 21 - Body Wiring - Coronet (Station Wagon)

MyMopar.com

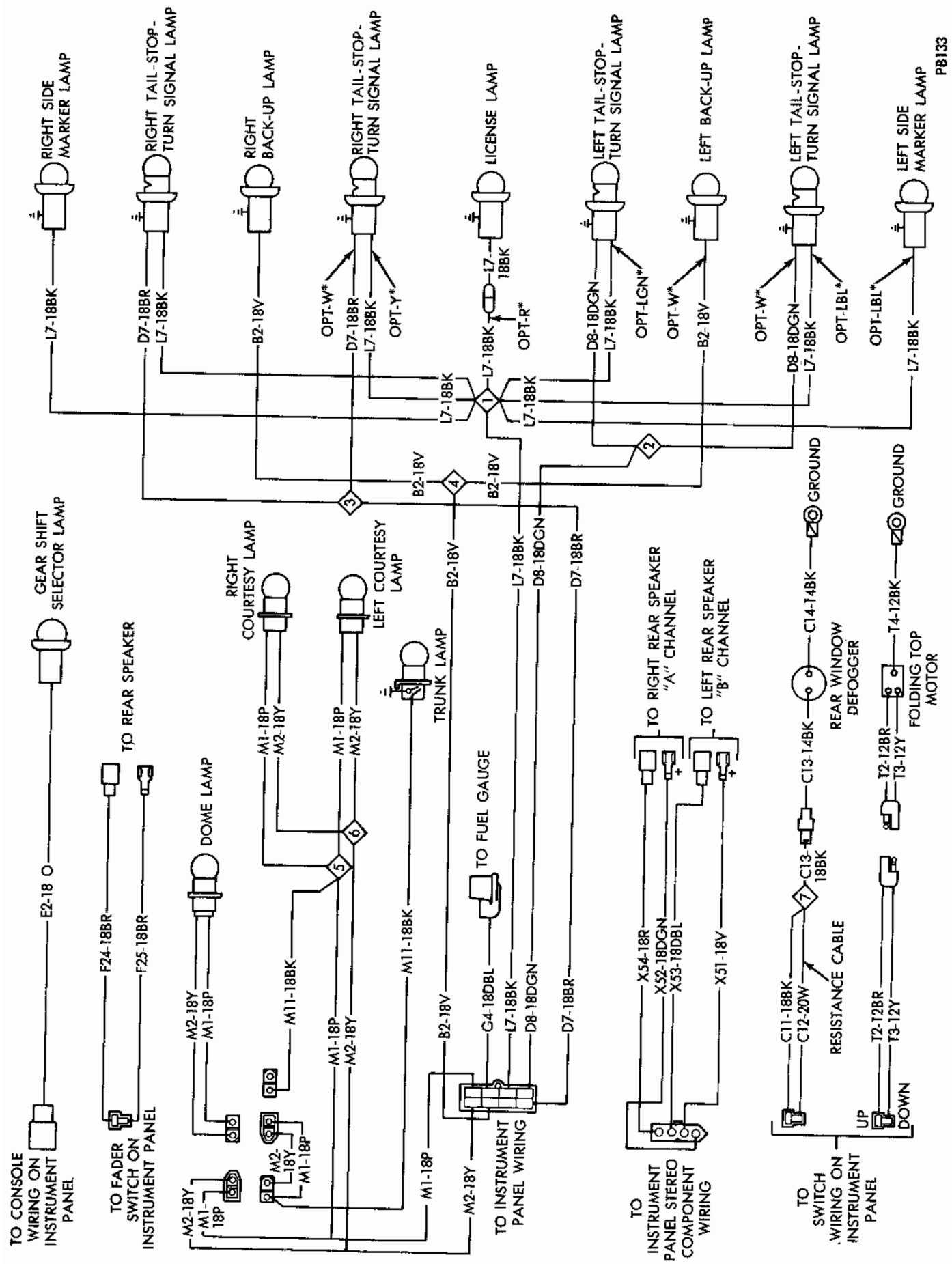

Fig. 22 - Body Wiring - Challenger

MyMopar.com

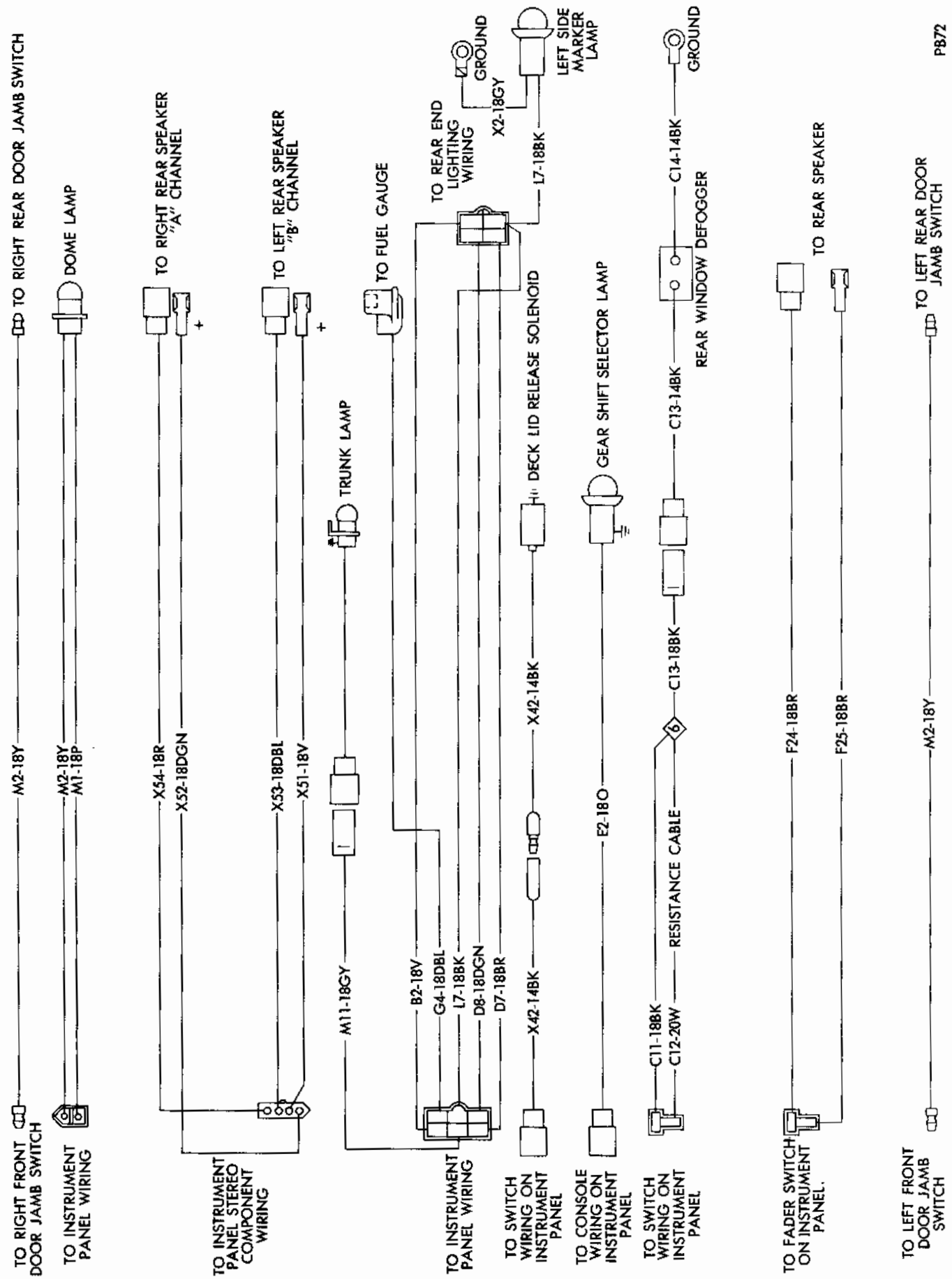

Fig. 23 - Body Wiring - Coronet, Charger (Except Station Wagon)

MyMopar.com

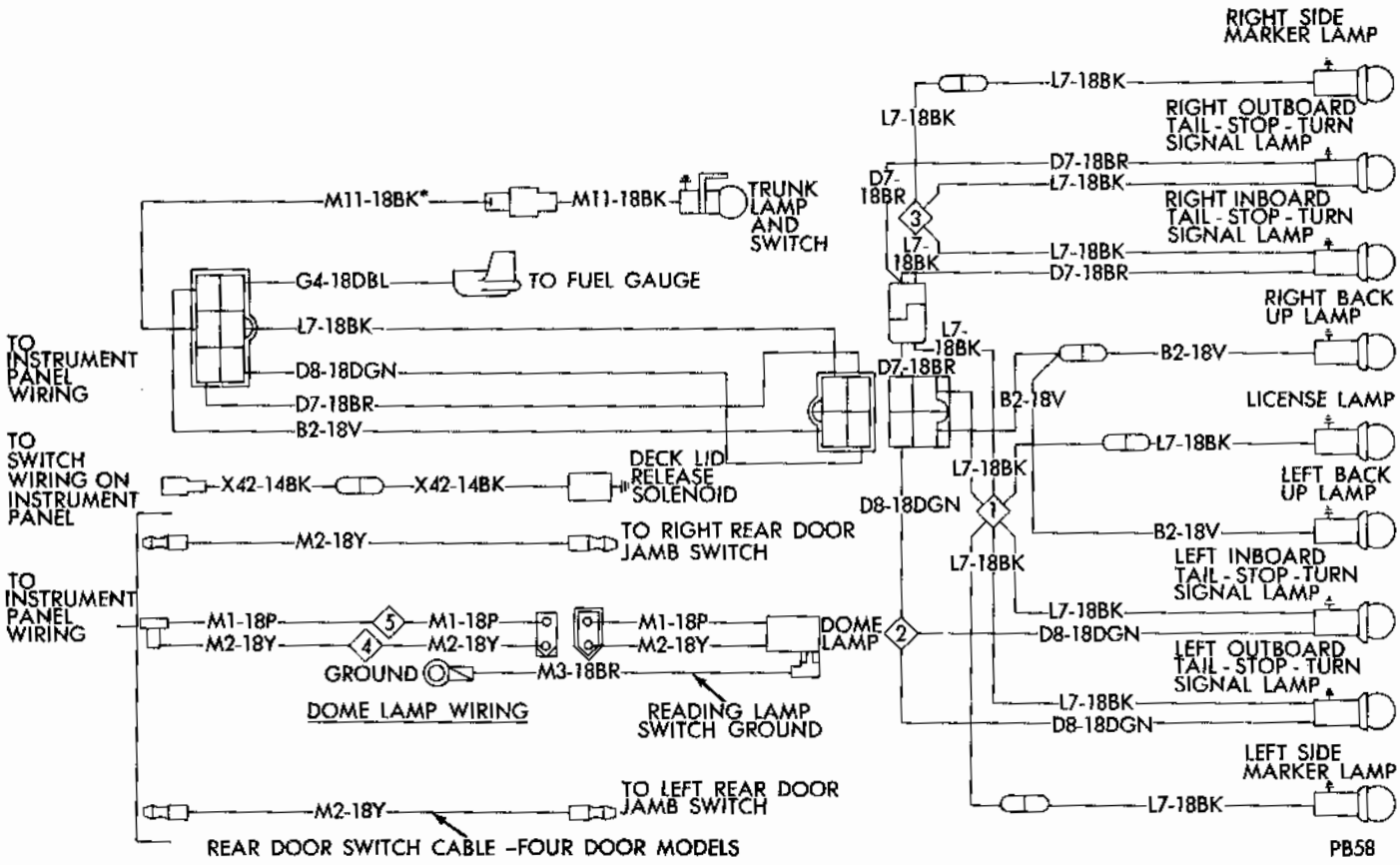

Fig. 24 - Body Wiring - Polara, Monaco (Except Station Wagon)

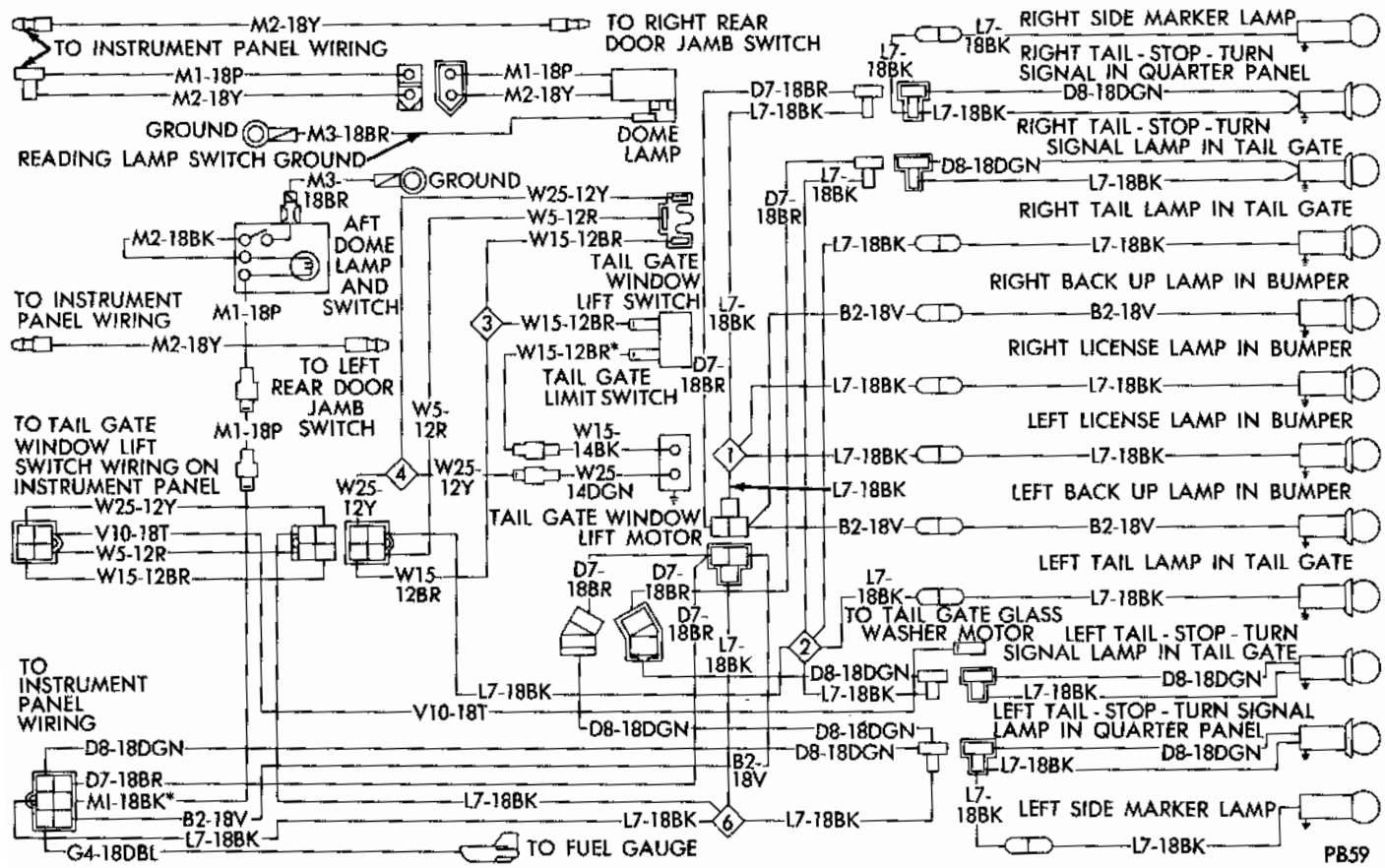

Fig. 25 - Body Wiring - Polara, Monaco (Station Wagon)

MyMopar.com

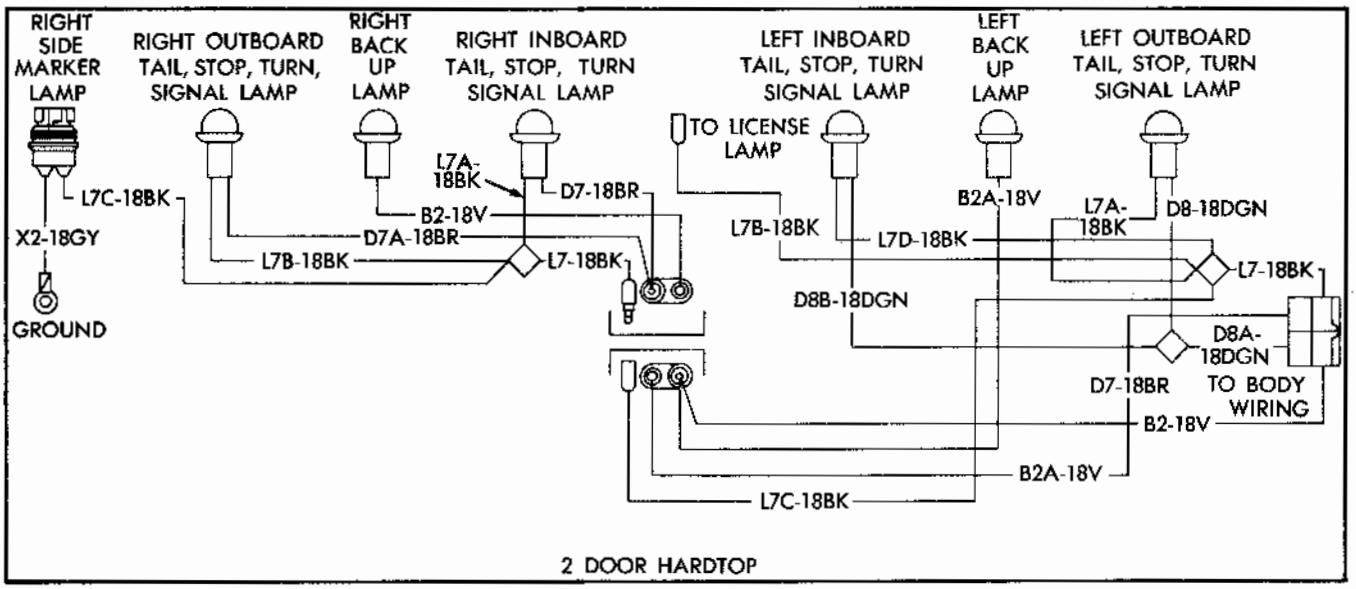

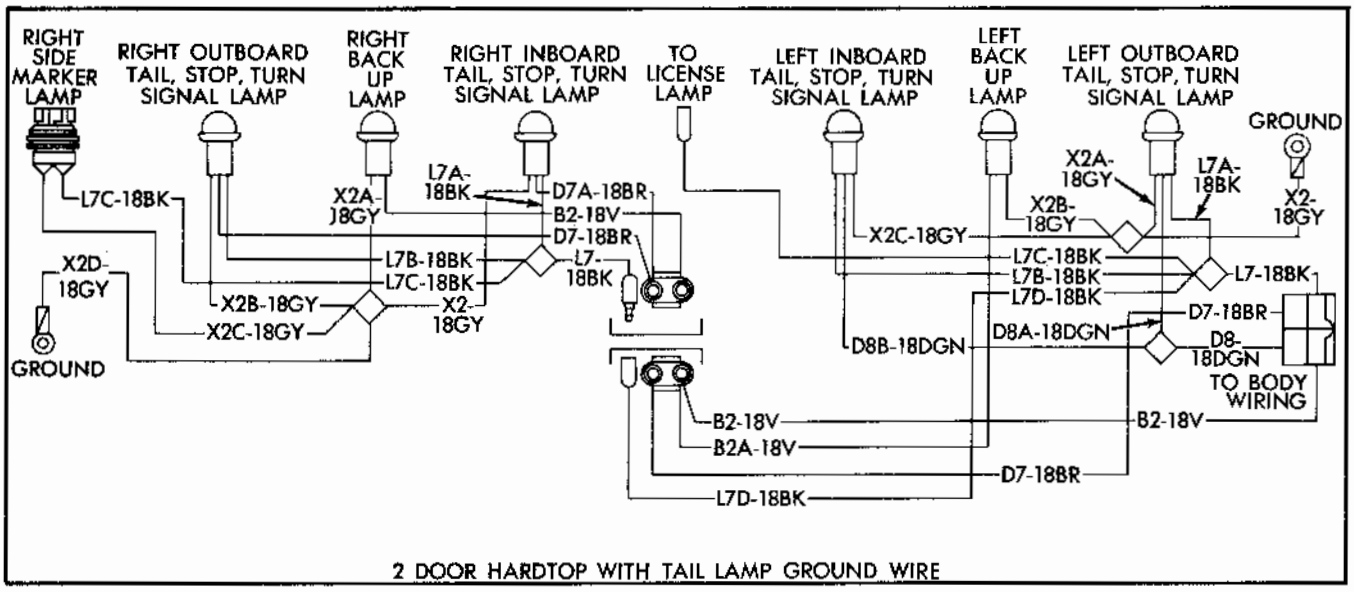

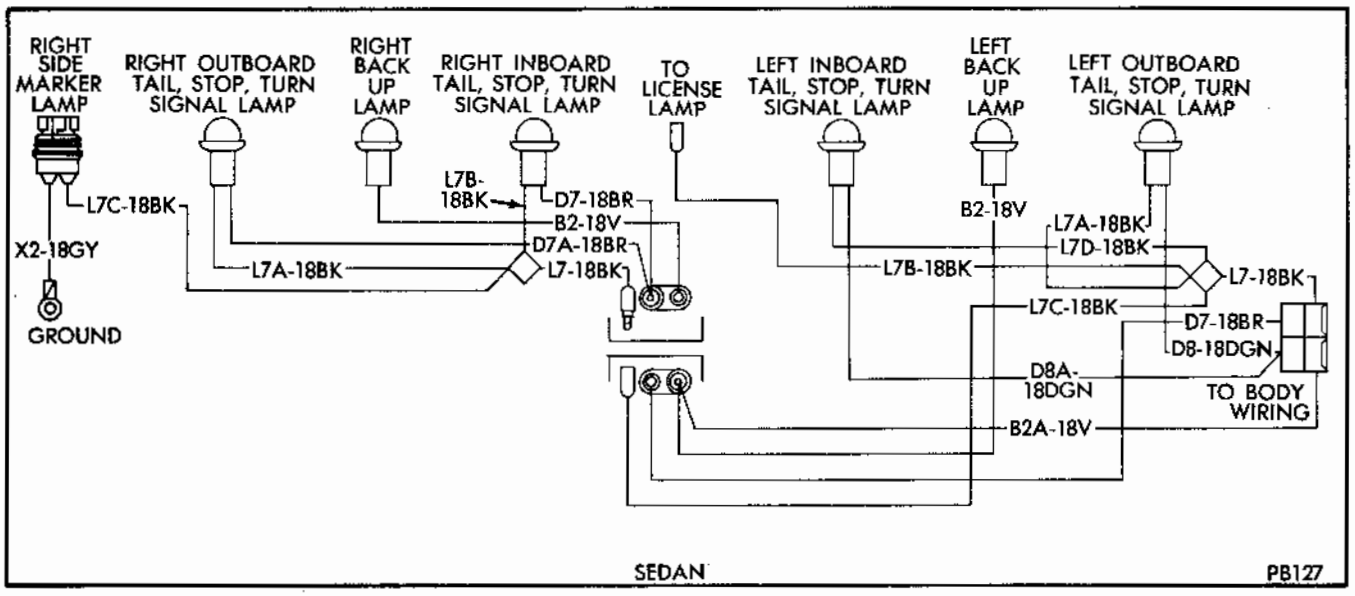

Fig. 26 - Rear End Lighting Wiring - Coronet, Charger

MyMopar.com

SIDE GLASS

POLARA-MONACO

INDEX

	Page
GLASS ADJUSTMENTS-VENTWING	6
4-DOOR HARDTOP	6
Adjustments-With Vent Wing	6
Door Glass And Vent Wing Replacement	6
Assembly	7
Disassembly	7
Installation	8
Removal	6
GLASS ADJUSTMENTS-VENTLESS	2
2-DOOR HARDTOP	2
Glass Rear Track	4
Installation	5
Removal	4
Glass Replacement	3
Installation	3
Removal	3
Lift Bracket	5
Pivot Bracket	5
Regulators	5
Regulator Arms-Manual	5
Regulator Motor Replacement	5
Up-Stops	5
Window Lift Switch	6
GLASS TAILGATE	21
Adjustments	21
Glass Replacement	21
Installation	21
Removal	21
Glass Lift Channel	22
Glass Run Channel	22
Installation	22
Removal	22
Regulator Replacement	22
Installation	22
Removal	22
HARDTOP REAR DOOR GLASS	12
Adjustments	12
Glass Assembly	14
Glass Lift Brackets	15
Glass Replacement	13
Installation	13
Removal	13
Regulators	12
Regulator Motor Replacement	12
Up-Stops	14
Window Lift Switch	12
QUARTER PANELS	15
Belt Line Weatherstrip	15
Garnish Mouldings	15
Glass Adjustment	15
Handles	15
Trim Panels	15
Watershield	15
QUARTER WINDOW-HARDTOP	16
Adjustments	16
Down Stops	16
Front Track	17
Installation	17
Removal	17
GLASS ADJUSTMENTS-SEDAN	10
Replacement	10
Glass Replacement	10
Installation	11
Removal	10
Glass Lower Frame	19
Installation	19
Removal	19
Glass Run And Weatherstrip	20
Retainer	20
Installation	20
Removal	20
Glass Lift Channel	21
Glass Run Channel	22
Installation	22
Removal	22
Pivot Bracket	5
Regulator	5
Regulator Motor Replacement	5
Rear Track	4
Installation	5
Removal	4
Up-Stops	5
Window Lift Switch	6

DOOR-QUARTER-TAIL GATE (POLARA-MONACO)

GLASS ADJUSTMENTS

The circled numbers shown on the glass adjustment reference illustrations indicate the particular step number being read in the adjustment procedure.

Prior to adjusting glass, all doors must be correctly fitted in their opening and the weatherstrips at the "A" post and roof rails must be properly installed.

MyMopar.com

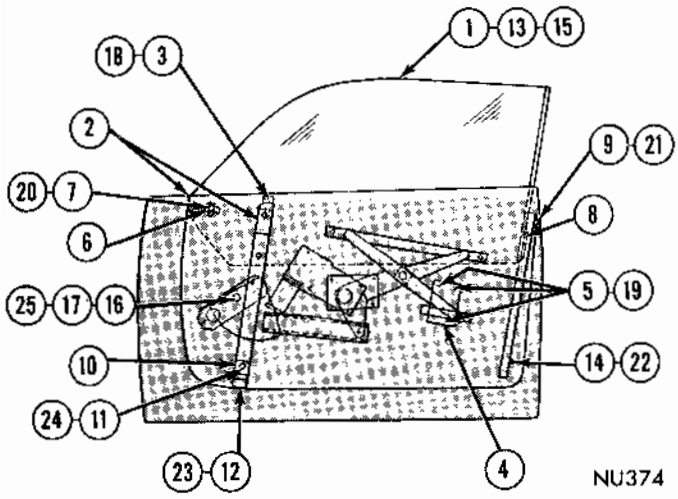

Fig. 1 - Glass Adjustments 2 Door Hardtop - Ventless

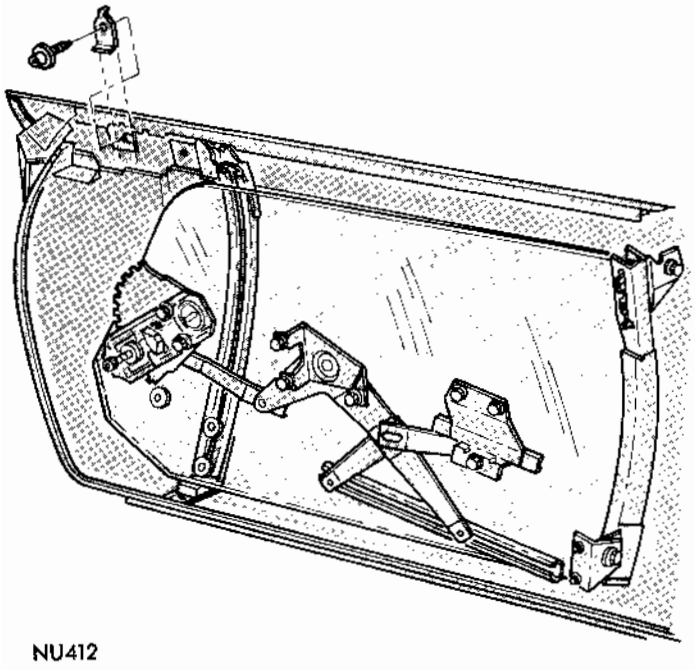

Fig. 2 - Glass Up-Stops

Refer to the adjustment illustration and loosen the attaching screws and nuts of the various door components affecting glass adjustment.

Service procedures for components related to the door or vent wing glass follow the glass adjustment procedures.

GLASS ADJUSTMENTS - 2 DOOR HARDTOP

Adjustments-Ventless Door (Fig. 1)

Fore and Aft

(1) Raise glass completely.

(2) Move glass fore or aft to set glass to belt line weatherstrip.

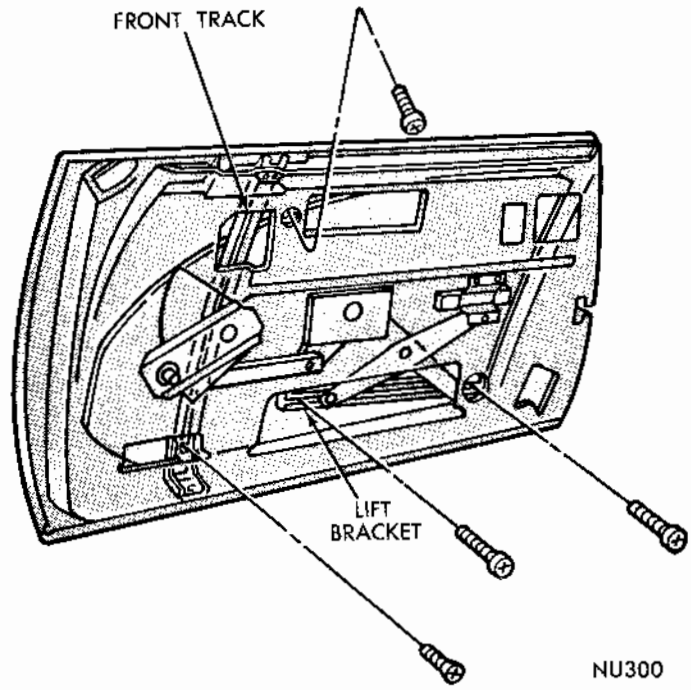

Fig. 3 - Lift Bracket

(3) Tighten glass track upper bracket at belt line.

Parallelism of Glass to Primary Seal

(4) Move pivot bracket fore or aft and set glass parellel to weatherstrip locating bead at primary sealing lip.

(5) Tighten pivot bracket and support screw assemblies.

(6) Set front up-stop down against bumper on glass.

(7) Tighten up-stop bracket screw on inner panel (Fig. 2).

(8) Set rear channel up-stop wedge down against stop in rear frame.

(9) Tighten rear channel and bracket upper attachment screw.

In-Out and Secondary Seal

(10) Move bottom of front track to create an effective glass to weatherstrip secondary seal.

(11) Tighten glass track to lower bracket screw.

(12) Tighten track lower bracket and retainer to inner panel nut assembly.

Front and Rear Track Parrallelism

(13) Run glass approximately 2/3 down.

(14) Tighten glass run rear channel and bracket assembly lower bracket nut.

Down Stop-Manual

(15) Lower glass until top edges of glass is even with or slightly below belt line of door outer panel. **Do not allow glass to drop below weatherstrip on door outer panel.**

MyMopar.com

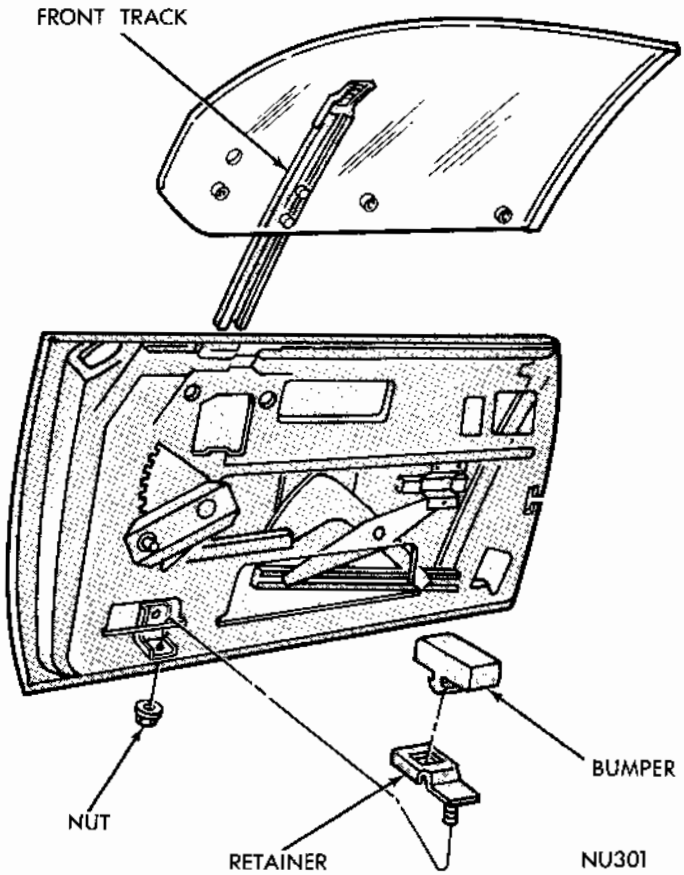

Fig. 4 - Glass Replacement

(16) Position stop on regulator plate against stop on sector.

(17) Tighten regulator plate stop locknut. Tighten callouts 18 through 25 securely. (Fig. 1).

GLASS REPLACEMENT

Removal

(1) Remove door belt line weatherstrips.

(2) With regulator arms in the full down position, remove screws attaching lift bracket to glass (Fig. 3).

(3) Remove front track upper and lower bracket attaching screws.

(4) Raise door glass and front track assembly out of door (Fig. 4).

(5) Remove front track from glass guide and guide from glass (Fig. 5).

(6) Remove fasteners and up stop from glass (Fig. 5).

Installation

(1) Place glass on table with outside of glass facing upward.

(2) Install fasteners and up-stop in glass (Fig. 5).

(3) Position track guide over fasteners and secure with screw.

(4) Slide front track lower end flanges through guide grooves.

(5) With regulator arms in the full down position insert door glass and front track assembly into door.

(6) Allow track to slide down to bottom of door panel.

(7) After up-stop bumper has cleared through glass opening, engage glass rear frame in rear channel run and lower glass to bumper of lower adjusting bracket.

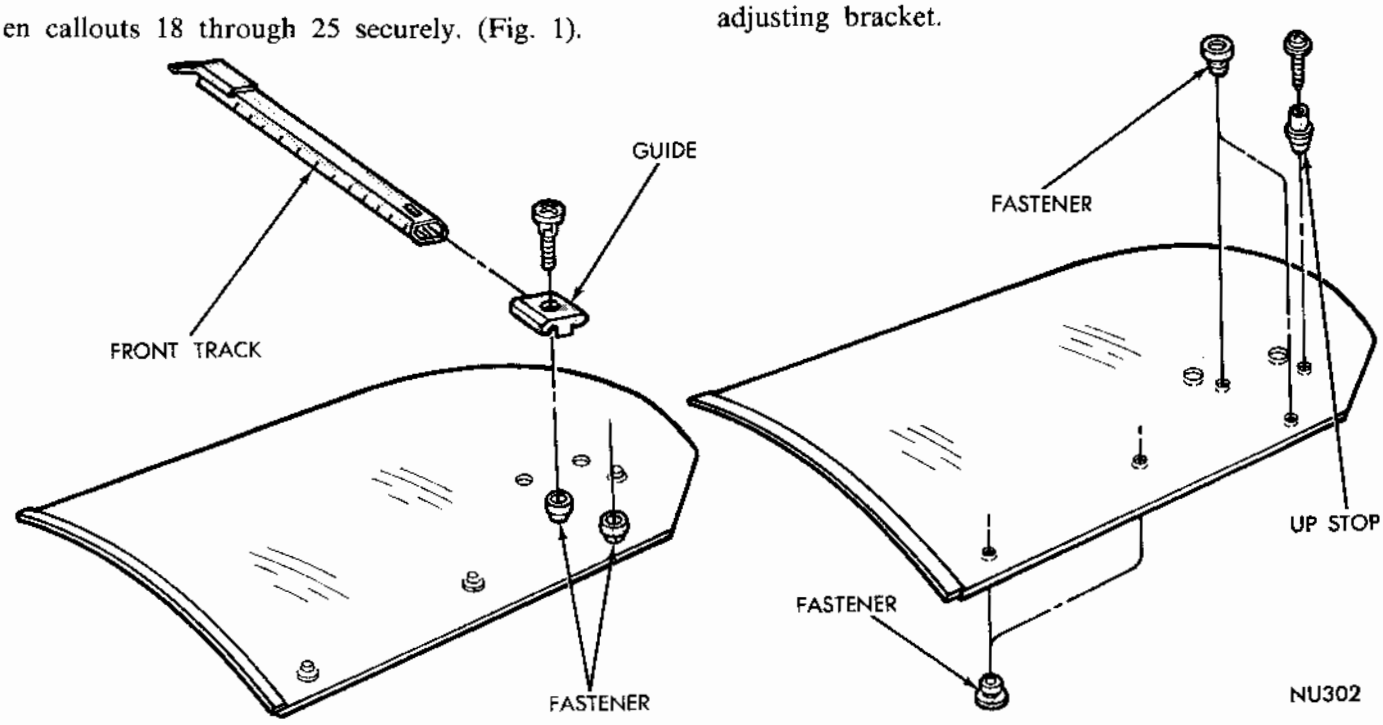

Fig. 5 - Glass Assembly

MyMopar.com

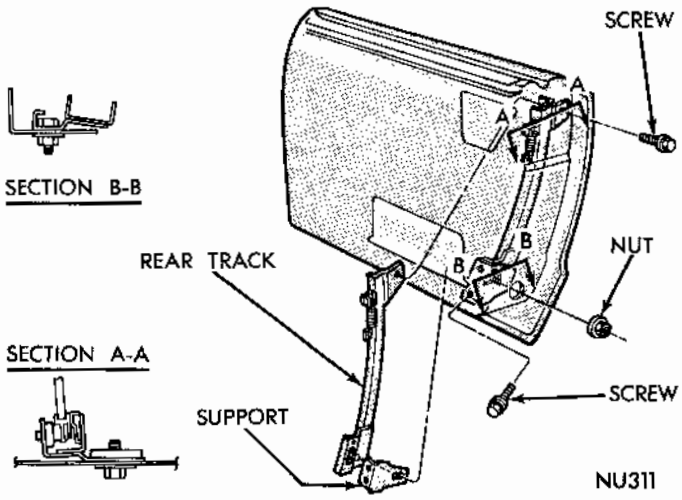

Fig. 6 - Glass Rear Track

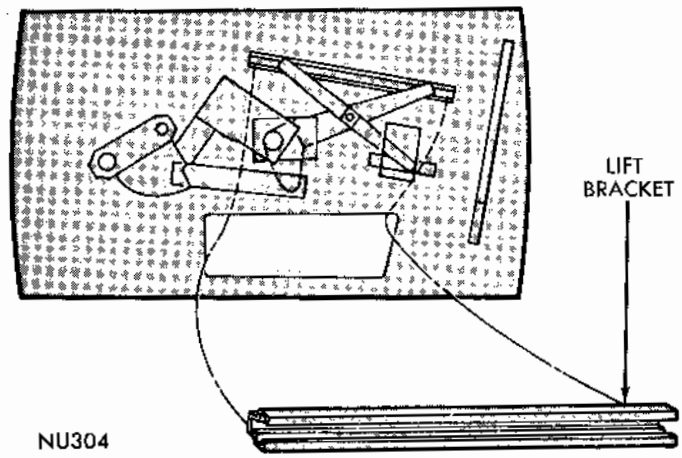

Fig. 7 - Glass Lift Bracket

(8) Secure front track upper and lower mounting brackets with screws.

(9) Align holes in lift bracket with fasteners in glass and secure with screws.

GLASS REAR TRACK

Removal

(1) Remove the door glass and front track assembly.

(2) Remove screw attaching track upper bracket to door lock face and nut attaching track lower bracket to lower support (Fig. 6).

(3) Remove track assembly through large access hole in door panel.

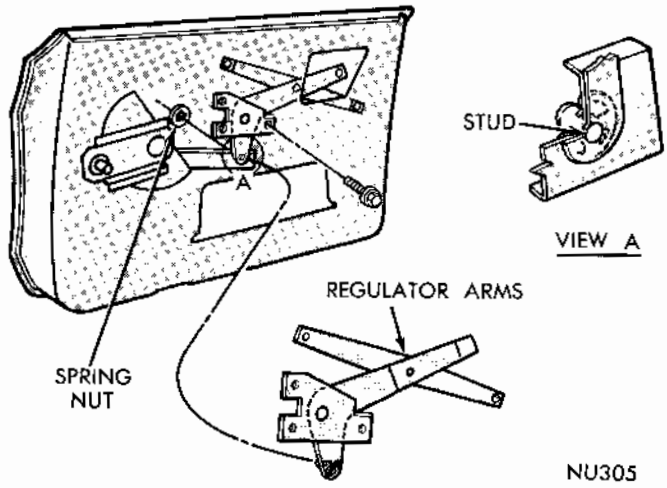

Fig. 8 - Regulator Arm

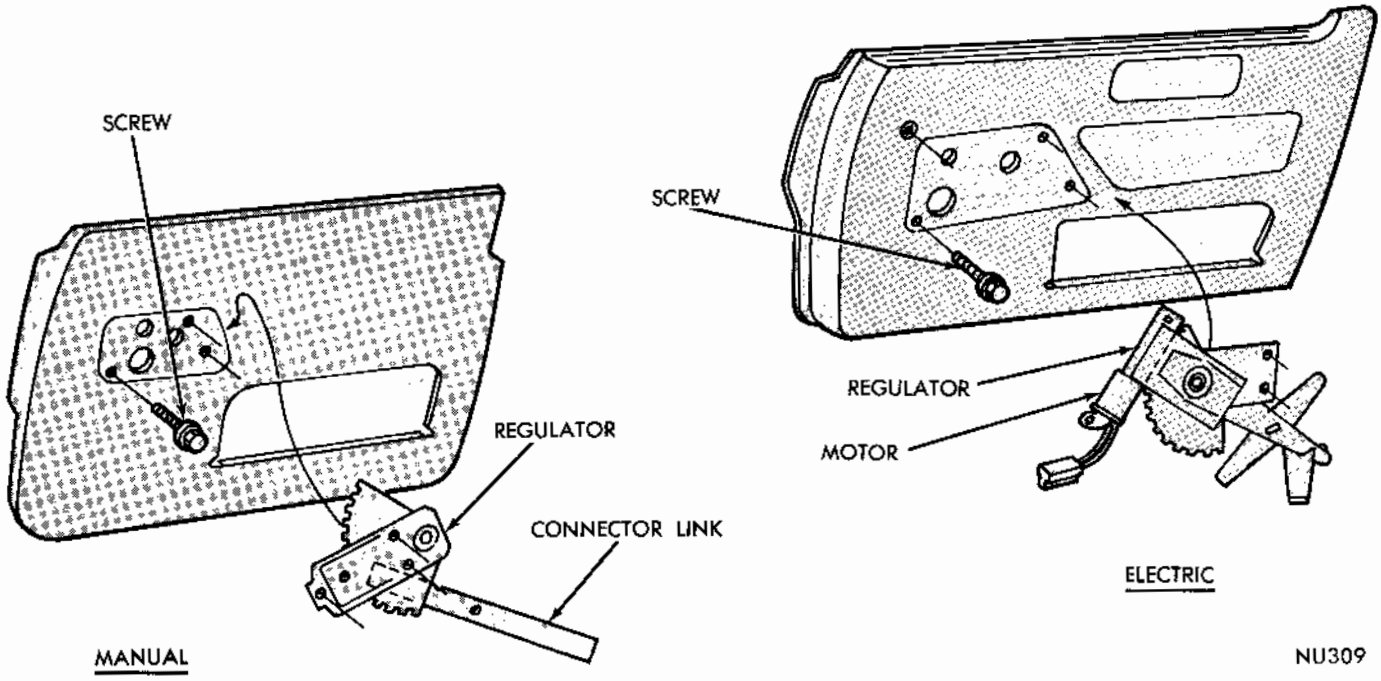

Fig. 9 - Regulator Assemblies

MyMopar.com

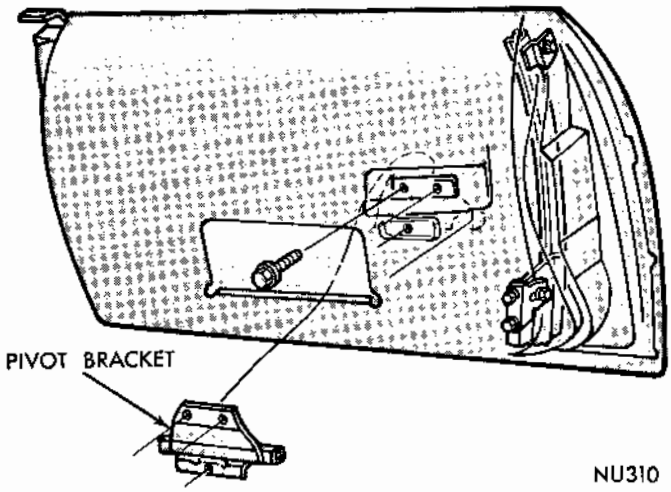

Fig. 10 - Pivot Bracket

Installation

(1) Position track assembly into door through large access hole.

(2) Align track upper bracket to hole in door lock face and install screw loosely.

(3) Insert track bottom bracket adjustment stud in slot of lower support bracket and install nut loosely.

(4) Install door glass assembly and tighten rear track screw and nut after adjusting glass.

UP-STOP

The glass up-stop (Fig. 2) is attached to the door outside panel belt reinforcement with a screw and washer assembly. Engage tab on stop with slot in reinforcement.

GLASS LIFT BRACKET

The glass lift bracket (Fig. 7) is positioned over sliding blocks on the regulator arms. Screws are used to secure the lift channel to the glass fasteners. Lubricate the sliding block contact areas of the lift channel sparingly.

REGULATOR ARMS—MANUAL

The manually operated regulator incorporates a replaceable type arm assembly (Fig. 8). The arm assembly is retained on the inner door panel with screws and to the regulator connector link of the regulator with a spring nut. The door glass assembly should be removed when replacing the arm assembly.

REGULATORS

The manual and electric operated regulators (Fig. 9) are attached to the door inner panel with screws.

Refer to the Electrical Group for test procedures and wiring diagrams for electric operated regulators.

PIVOT BRACKET

The pivot bracket and support assembly (Fig. 10) is secured with screws to the electric regulator idler arm slide and to the door inner panel with the manual regulator.

REGULATOR MOTOR REPLACEMENT

When necessary to remove motor from

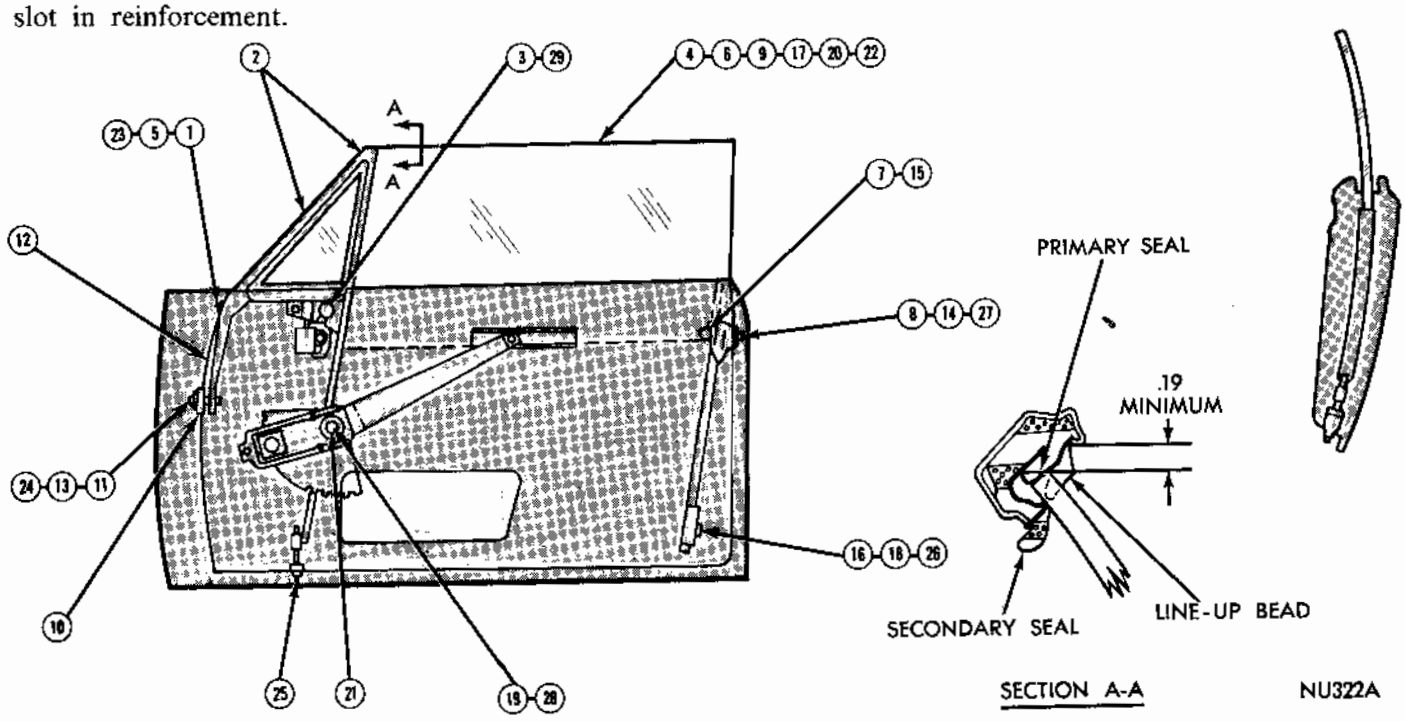

Fig. 11 - 4 Door Hardtop - Glass Adjustments

MyMopar.com

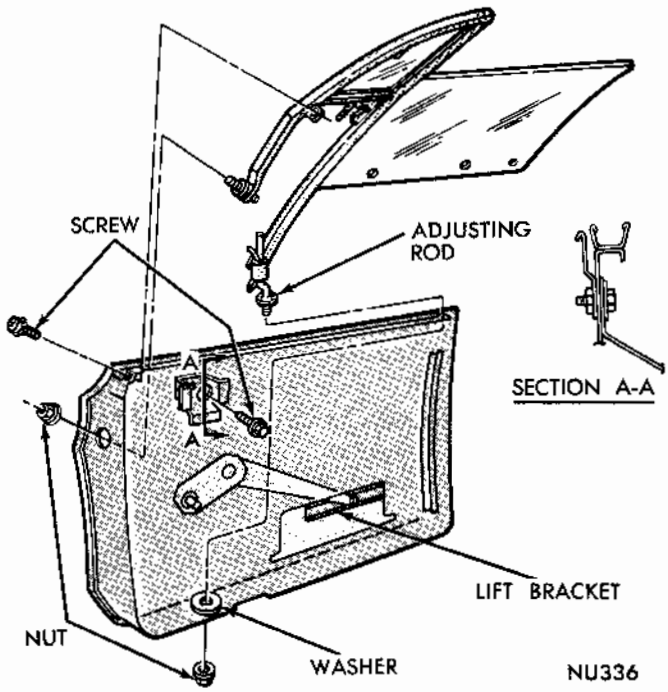

Fig. 12 - Glass Replacement

regulator, it is imperative the linkage be securely clamped in a vise to lock it in place. Failure to do this allows the assist spring to drive the mounting bracket around the lift pivot.

WINDOW LIFT SWITCH

Slide a thin blade behind the switch housing (front and back) to depress retaining clips and pull switch out from panel. Carefully separate multiple terminal block from switch body and remove switch from panel.

4-DOOR HARDTOP

ADJUSTMENTS (WITH VENT WING FIG. 11)

Primary Seal Adjustment

(Fore-Aft-Up-Down)

(1) Lower glass fully and loosen vent wing screw on hinge face at belt line.

(2) Align and set vent wing to "A" post and roof rail weatherstrip.

(3) Snug secure vent wing screw at belt rear attachment and raise glass fully.

(4) Set top edge of glass parallel to line up bead on roof rail weatherstrip.

(5) Snug secure vent wing screw on hinge at belt line.

Parallelism to Belt Outer Weatherstrip

(6) Run glass approximately 1/3 down.

(7) Adjust rear run channel upper attachment so glass lightly touches on outer weatherstrip and up stop bracket on rear channel is in full up position.

(8) Snug secure rear run channel upper attachment screw.

In-Out Adjustment at Top of Glass and Secondary Seal

(9) Raise glass fully.

(10) Back out adjusting stud on vent wing leg until shoulder bottoms out against door panel reinforcement and a parallelism exists between glass edge and roof rail weatherstrip.

(11) Loosen nut assembly on vent wing leg adjusting stud.

(12) Force vent wing leg outboard until secondary seal is accomplished between glass and roof rail weatherstrip.

(13) Snug nut assembly and loosen screws to perform adjustment.

(14) Loosen rear channel upper bracket screw assembly.

(15) Position up-stop on rear channel down against plastic bumper on glass and snug secure screw assembly.

Division and Rear Channel Parallelism

(16) Loosen rear channel lower attachment nut assembly.

(17) Run glass approximately 3/4 down.

(18) Snug secure channel lower bracket nut assembly.

Manual Down Stop

(19) Loosen stop lock nut on regulator plate.

(20) Lower glass until top of glass is even with or slightly below door outer panel belt line. **Do not allow glass to drop below outer weatherstrip.**

(21) Position regulator plate stop against stop on sector, secure nut assembly.

(22) Operate window up and down testing for ease of operation and inspecting alignment.

Cranking effort at the regulator handle should not exceed 30 inch pounds with door closed and all glass in the up position.

Tighten callouts 23 through 29 securely (Fig. 11)

DOOR GLASS AND VENT WING REPLACEMENT

Removal

(1) Remove nut and washer from end of division bar adjusting rod (Fig. 12).

(2) Remove vent frame to belt spacer reinforcement screw.

(3) Remove vent wing adjusting stud to upper hinge nut assembly and vent wing to belt attaching screw.

MyMopar.com

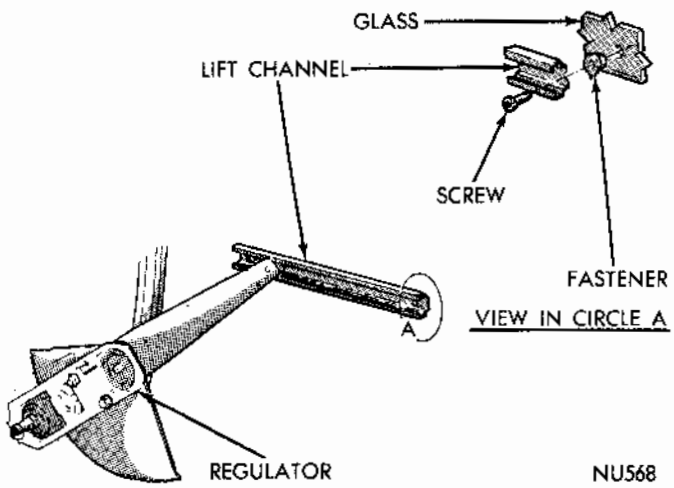

Fig. 13 - Lift Bracket

(4) Remove lift channel to door glass fastener screws (Fig. 13).

(5) Tilt top of glass inward and remove door glass and vent wing assembly.

Disassembly

(1) Invert door glass and vent wing assembly.

(2) Remove vent wing adjusting stud at hinge reinforcement (Fig. 14).

(3) Remove lower adjusting stud and anti-rattle from division channel.

(4) Slide door glass assembly out of vent wing division channel.

(5) Remove slide assembly from glass and weatherstrip (Fig. 13) by pulling slide halves apart.

(6) Remove weatherstrip from glass.

(7) Push lift channel fasteners out of glass.

Assembly

(1) Insert lift channel fasteners into glass from concave side (Fig. 14).

(2) Position weatherstrip on glass front edge with notched end in up position.

(3) Raise edge of weatherstrip and insert slide at attachment in glass. Secure by pressing together.

(4) With glass and vent wing in inverted position (Fig. 13) insert slides on glass assembly into vent wing division channel.

(5) Insert anti-rattle into division channel adjusting bracket loop opposite loop joint.

(6) Insert smooth end of adjusting rod into bracket loop between anti-rattle and loop joint.

(7) Install adjusting stud to vent wing hinge loosely.

(8) Apply rubber lubricant sparingly to each side of vent wing belt weatherstrip lip for entire length.

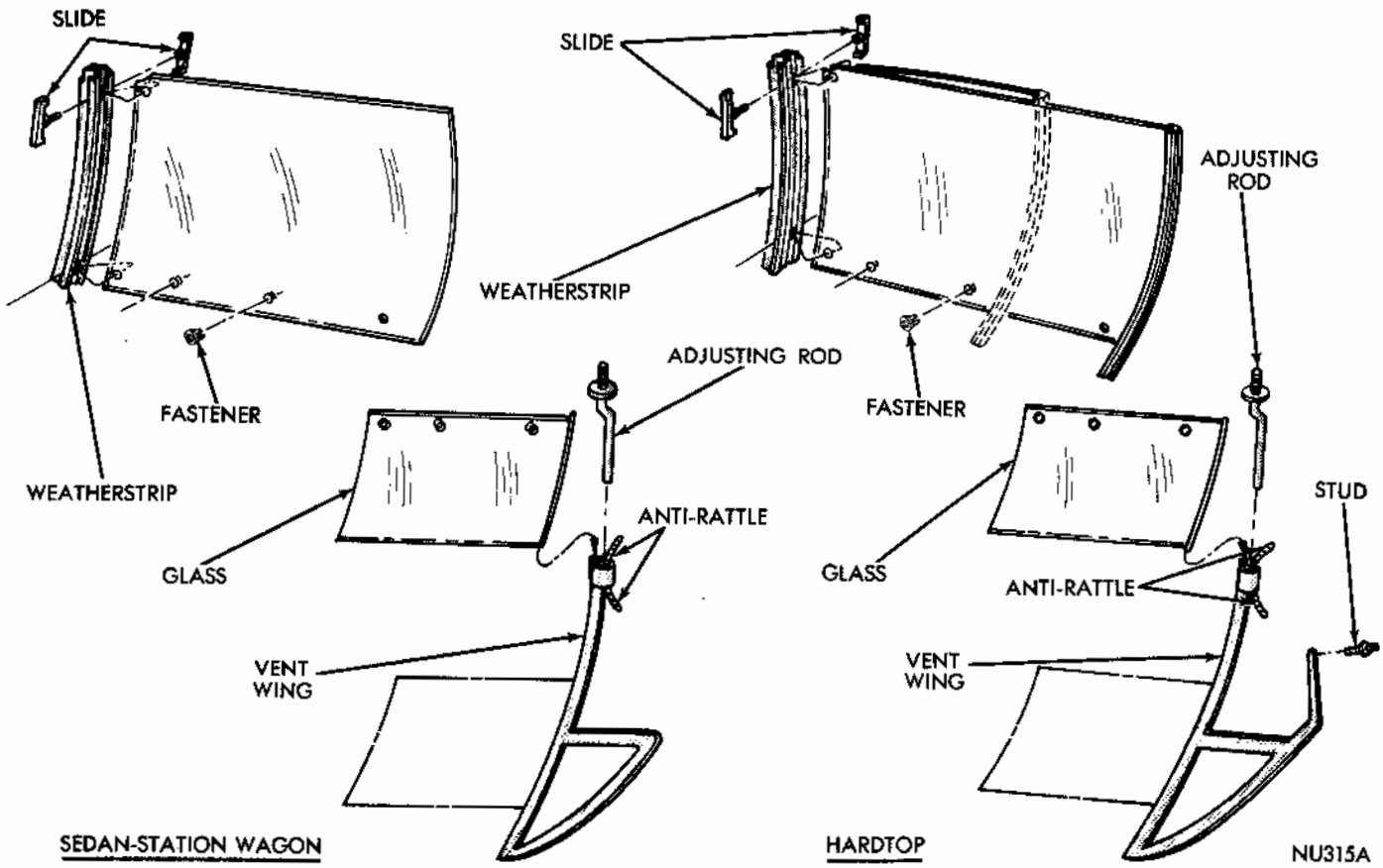

Fig. 14 - Glass Assembly

MyMopar.com

Installation

(1) Insert division channel through upper lock face corner, turn as necessary and move assembly forward.

(2) Tilt glass top inward, raising the off-set front lower leg to clear spacer bracket at belt.

(3) Insert lowest point of front leg and adjusting stud and lower assembly into door, with the pivot assembly mounting plate between the spacer bracket and door outside panel reinforcement.

(4) Position adjusting stud on lower off-set leg to hole in door hinge pillar and push through to stud shoulder.

(5) Fit rear edge of glass in run channel.

(6) Align vent wing lower pivot plate slot with access hole in inner panel and spacer bracket and with attaching hole in spacer bracket. Secure with screws.

(7) Position washer on division bar adjusting rod

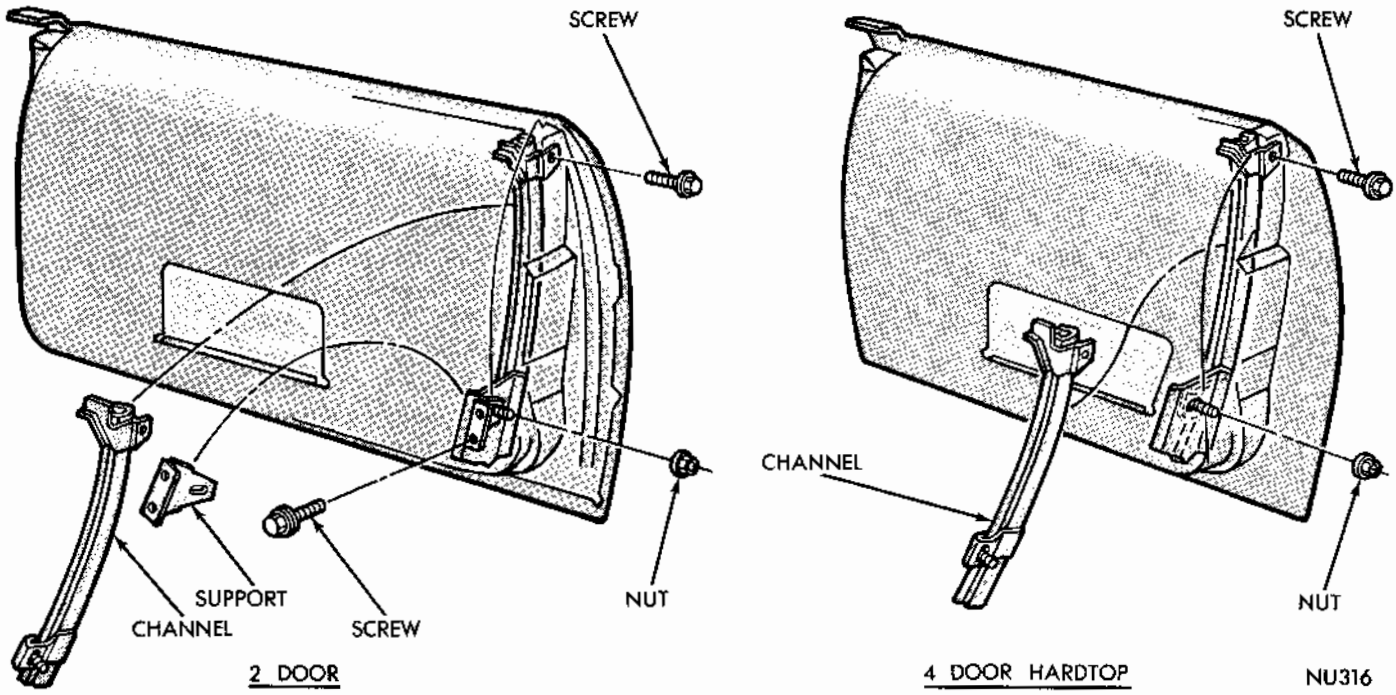

Fig. 15 - Glass Rear Channel

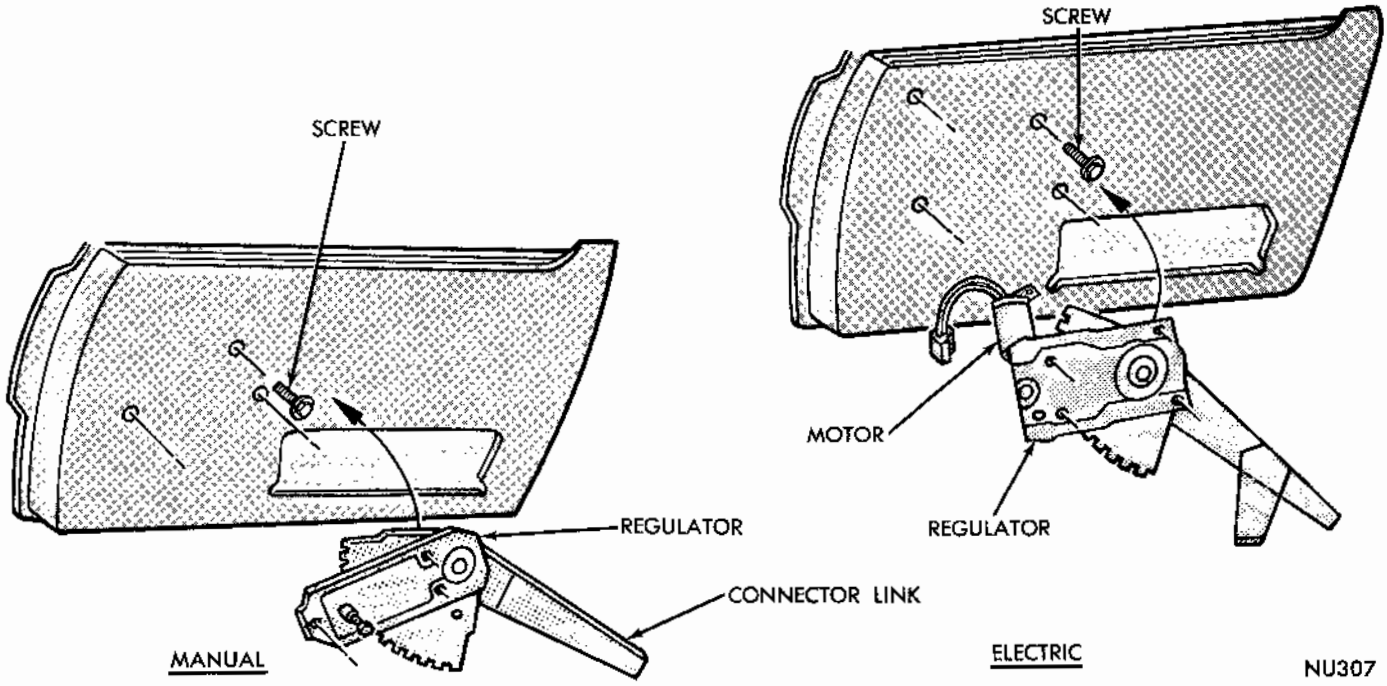

Fig. 16 - Regulator Assemblies

MyMopar.com

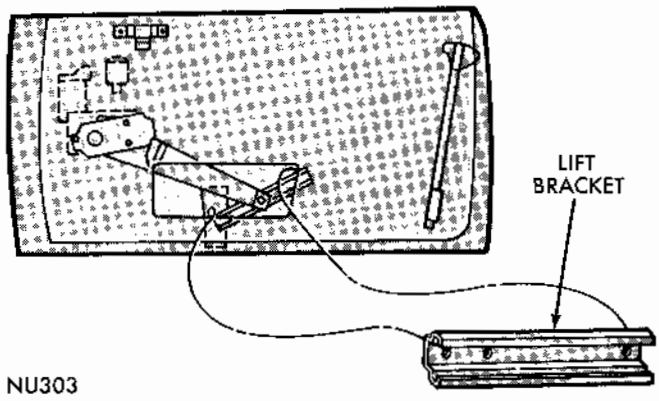

Fig. 17 - Lift Bracket

and insert adjusting rod into lower support.

(8) Install nut assembly on adjusting rod.

(9) Position and secure vent wing at front belt attachment with a screw and adjusting stud with a nut and washer assembly.

(10) Align glass fasteners with holes in lift channel and secure with screws.

REAR CHANNEL AND UP-STOP

Removal

(1) Remove up-stop at rear channel.

(2) Remove the door glass and vent wing assembly.

(3) Remove channel upper support retaining screw at door lock face, inner panel support and lower support retaining nut (Fig. 15) at door.

(4) Remove channel assembly through large access hole.

Installation

(1) Position rear channel assembly into door through large access hole.

(2) Align upper support to hole in door lock face and install screw loosely (Fig. 15).

(3) Insert channel lower stud into slot of support assembly and secure with nut.

(4) Tighten upper support screw.

(5) Install door glass.

(6) Install up-stop at rear channel.

DOOR GLASS REGULATOR

The manual and electric operated regulators (Fig. 16) are attached to the door inner panel with screws.

Refer to the Electrical Group for test procedures and wiring diagrams for electric operated regulators.

GLASS LIFT BRACKET

The glass lift bracket (Fig. 17) is positioned over sliding blocks on the regulator arms. Screws are used to secure the lift channel to the glass

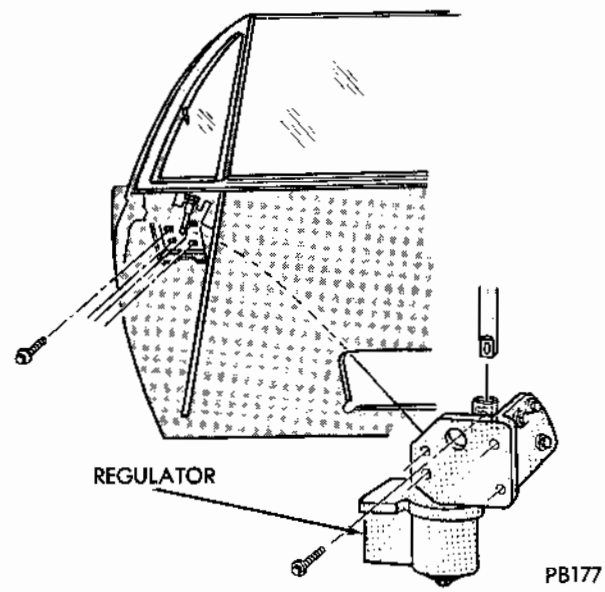

Fig. 18 - Vent Wing Regulator

fasteners. Lubricate the sliding block contact areas of the lift channel sparingly.

REGULATOR MOTOR REPLACEMENT

When necessary to remove motor from regulator, it is imperative the linkage be securely clamped in a vise to lock it in place. Failure to do this allows the assist spring to drive the mounting bracket around the lift pivot.

WINDOW LIFT SWITCH

Slide a thin blade behind the switch housing (front and back) to depress retaining clips and pull switch out from panel. Carefully separate multiple terminal block from switch body and remove switch from panel.

VENT WING REGULATOR

Removal

(1) With vent wing open, remove screws attaching regulator to door inner panel belt reinforcement (Fig. 18).

(2) Remove shaft to coupling screw.

(3) Move regulator off of vent wing pivot shaft.

(4) Remove regulator through large access hole in door panel.

Installation

(1) Through large access hole, position and align sleeve on regulator coupling over vent wing pivot shaft.

(2) Position and align regulator body to attaching slots in door inner panel belt reinforcement and install attaching screws.

(3) Install regulator coupling to vent wing pivot shaft screw.

MyMopar.com

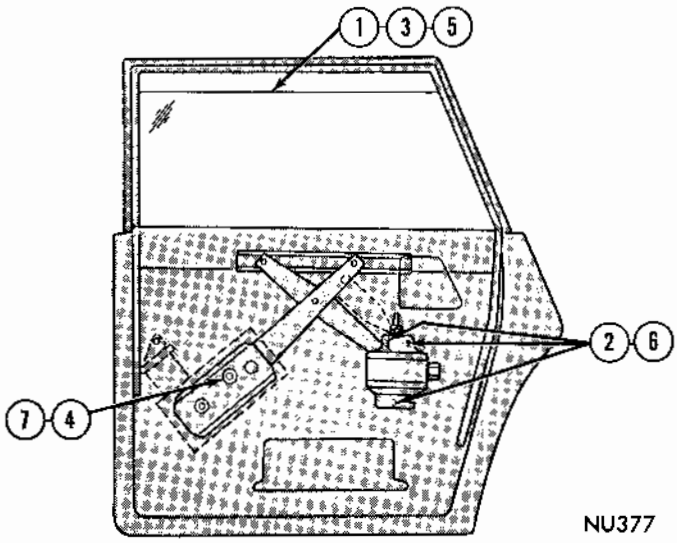

Fig. 19 - Sedan Rear Door Glass Adjustments

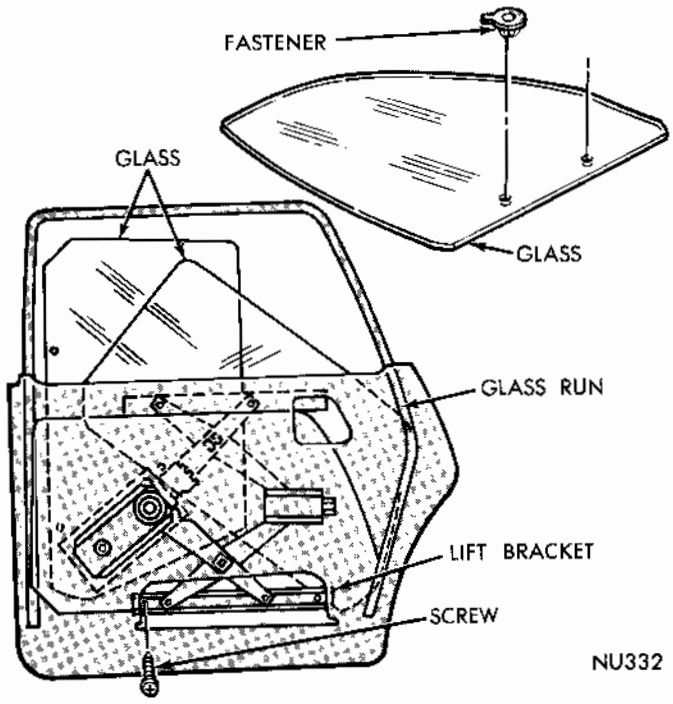

Fig. 20 - Glass Replacement

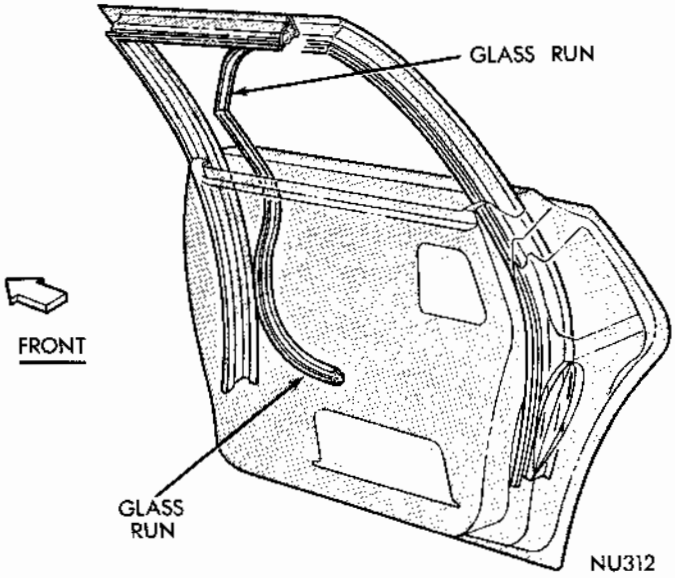

Fig. 21 - Glass Run

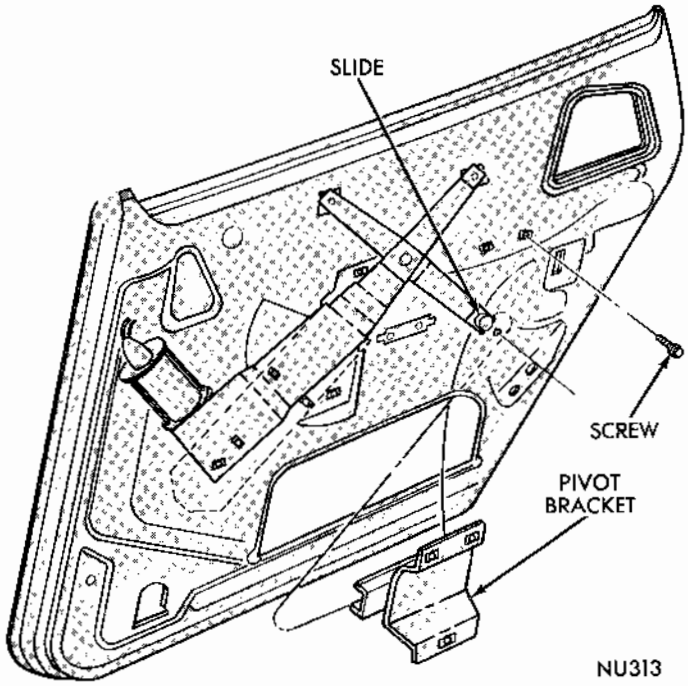

Fig. 22 - Pivot Bracket

REAR DOORS

Adjustments-Sedan (Fig. 19)

(1) Raise window to approximately 1/8 inch below door frame.

(2) Adjust regulator pivot bracket so gap between top of glass and door frame is constant. Snug tighten attaching nuts.

(3) Lower glass until top edge is even with or slightly below outer panel belt weatherstrip.

(4) Position stop on regulator plate against sector stop and snug tighten nut.

(5) Test operation and inspect alignment of glass. Tighten callouts 6 and 7 securely.

GLASS REPLACEMENT

Removal

(1) Remove lift channel to door glass fastener screws.

(2) Rotate front edge of glass rearward and up to disengage ends of glass from run channels.

(3) Lift glass assembly out of door.

(4) Remove lift fasteners from glass (Fig. 20).

MyMopar.com

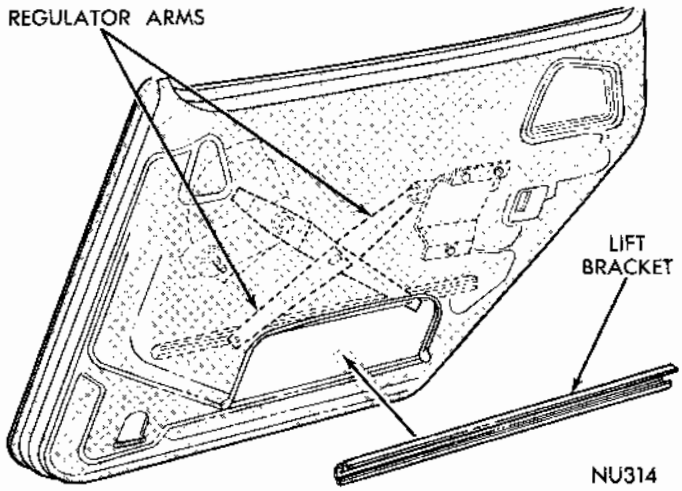

Fig. 23 - Lift Bracket

Installation

(1) Position lift fasteners into glass from glass inner surface (Fig. 20).

(2) With bottom of glass in forward position, lower glass into door.

(3) Rotate front edge of glass forward and down, engaging glass ends into the front and rear glass runs.

(4) Align glass fasteners with holes in lift channel and secure with screws.

GLASS RUN

The rear door glass run (Fig. 21) is a press fit in the door frame. Index the front notch into upper front corner of door frame and press entire front leg of run secure in channel. Position rear notch in run to upper rear corner of door frame and press entire top and rear leg securely in channel.

PIVOT BRACKET

Removal

(1) Remove the rear door glass.

(2) Remove pivot support bracket to door inner panel screw assemblies (Fig. 22).

(3) Slide pivot channel off of regulator arm slide and remove pivot bracket through large access hole.

Installation

(1) Apply lubricant to sliding contact surfaces of pivot channel.

(2) Through large access hole, position pivot channel over slide on regulator idler arm.

(3) Align pivot bracket mounting holes with holes in door inner panel and secure with screws.

(4) Install rear door glass.

GLASS LIFT BRACKET (FIG. 23)

Removal

(1) Remove rear door glass to lift bracket screws.

(2) Move lift bracket forward on front slide to disengage bracket from rear slide.

(3) Move bracket rearward to remove from front slide.

Installation

(1) Apply lubricant to channel of lift bracket.

(2) Position bracket channel to regulator arm front slide first, then move rearward to engage rear slide.

(3) Install rear door glass to lift bracket screws.

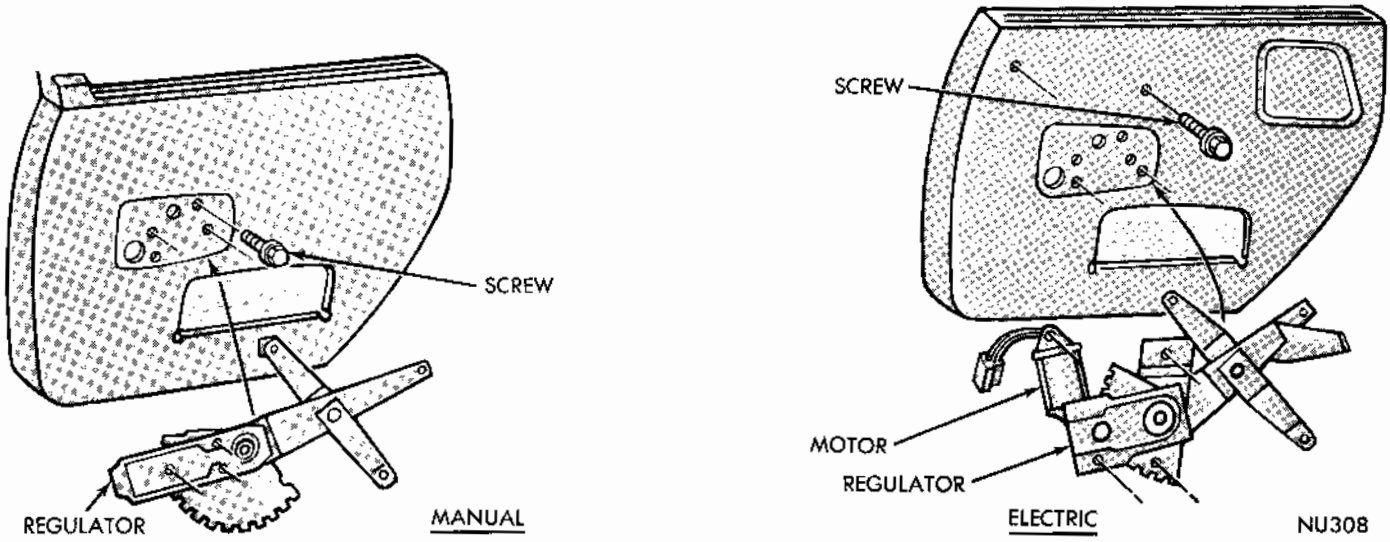

Fig. 24 - Regulator Assemblies

MyMopar.com

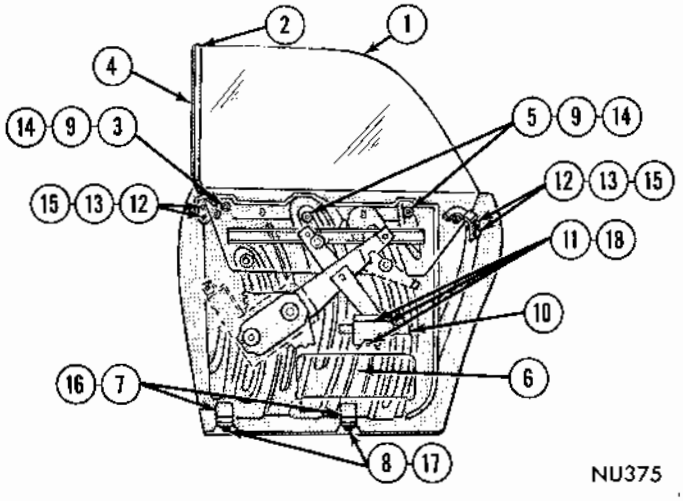

Fig. 25 - Hardtop Rear Door Glass Adjustments

REGULATORS

The manual and electric operated regulators (Fig. 24) are attached to the door inner panel with screws.

Refer to the Electrical Group for test procedures and wiring diagrams for electric operated regulators.

REGULATOR MOTOR REPLACEMENT

When necessary to remove motor from regulator, it is imperative the linkage be securely clamped in a vise to lock it in place. Failure to do this allows the assist spring to drive the mounting bracket around the pivot.

WINDOW LIFT SWITCH

Slide a thin blade behind the switch housing (front and back) to depress retaining clips and pull switch out from panel. Carefully separate multiple terminal block from switch body and remove switch from panel.

HARDTOP MODELS

ADJUSTMENTS (FIG. 25)

Parallelism and Primary Seal

(1) Raise window completely.

(2) Line up rear door glass upper front frame with upper rear edge of front door glass rear frame.

(3) Snug tighten track panel to reinforcement front screw.

(4) Set rear glass front frame parallel to rear frame of front door glass by lifting track panel bottom edge.

(5) Snug tighten rear and center floating screws in cage nuts.

In-Out and Secondary Seal

(6) Force bottom of track panel in or out for secondary seal with roof weatherstrip.

(7) Snug tighten adjusting bracket to track panel screws.

(8) Snug tighten adjusting bracket to track panel nut assembly on bottom of door panel outside surface.

(9) Tighten track panel upper attaching screws.

Parallelism to Front Glass Frame and Roof Rail Weatherstrips

(10) Adjust pivot bracket to bring upper front corner of rear glass parallel between front and rear glass frames and between glass and roof rail weatherstrips.

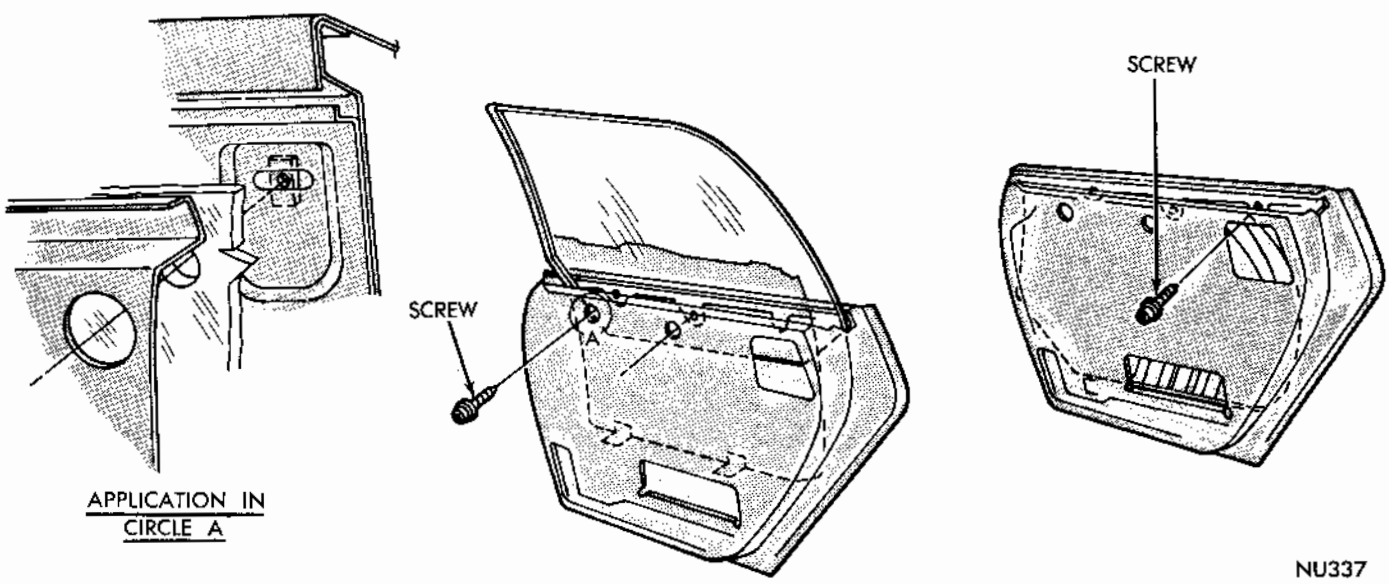

Fig. 26 - Track Panel Upper Attachment

MyMopar.com

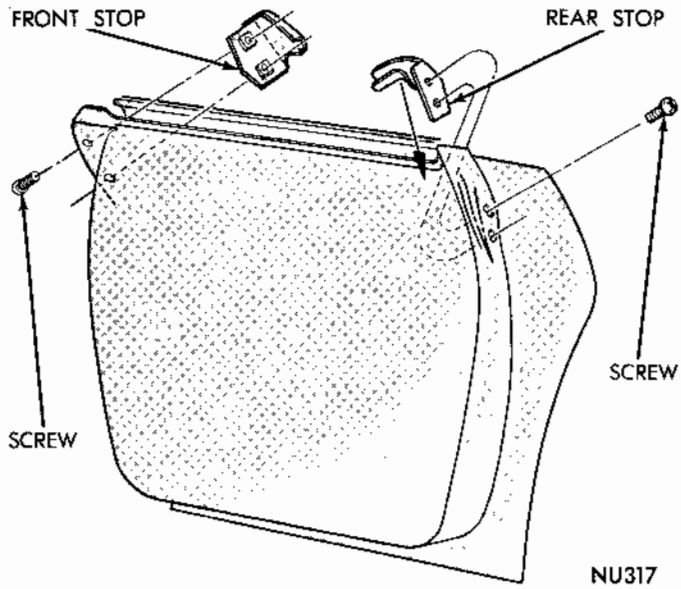

Fig. 27 - Up-Stop Brackets

(11) Snug tighten the pivot bracket screw assemblies.

Up-Stops

(12) Adjust up-stops by forcing them down against plastic up-stop bumpers on glass.

(13) Snug tighten screws on hinge and lock faces. Tighten callouts 14 through 18 securely.

GLASS REPLACEMENT

The rear door incorporates a track panel assembly to which the door glass is attached. When necessary to remove or install either the glass or track panel, the panel and glass must be removed or installed as an assembly.

Removal

(1) Remove track panel to door panel upper screws (Fig. 26).

(2) Remove down-stop adjusting bracket to track panel screws.

(3) Remove up-stop adjusting brackets from door panel (Fig. 27).

(4) Remove glass lift bracket to glass fastener screws (Fig. 28).

(5) Move track panel rearward, approximately four inches, and raise door glass to the full-up position.

(6) Raise track panel slowly until up-stop on glass (Fig. 29) are cleared through door.

(7) Raise track panel completely and remove glass and panel assembly (Fig. 30).

(8) Place track panel and glass assembly on a protected surface with the glass facing downward.

(9) Remove track stabilizer guide screws (Fig. 31) and remove guides from track panel.

(10) Remove U-nuts from outer side of track panel and bumpers from top inner side (Fig. 32).

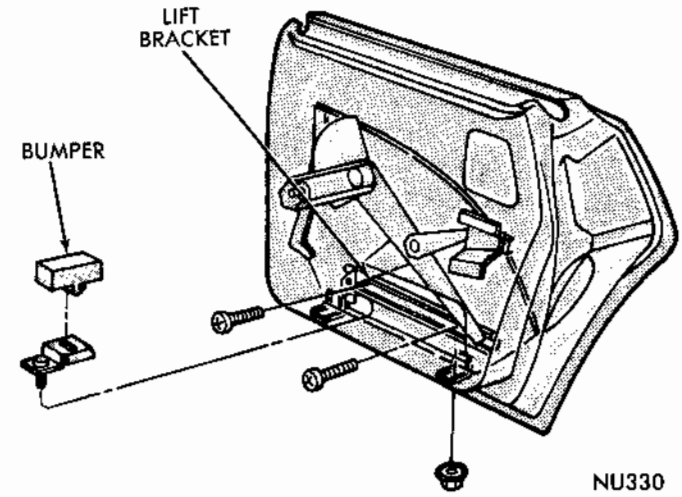

Fig. 28 - Lift Bracket

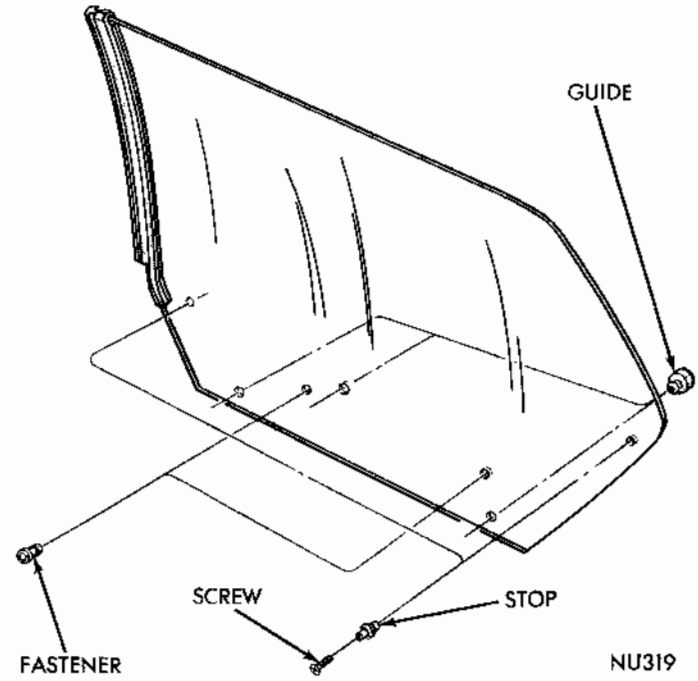

Fig. 29 - Door Glass Assembly

Installation

(1) Insert U-nuts into outer side of track and bumpers into top inner side.

(2) With glass assembly inner surface positioned downward on a protected surface, place track panel on glass aligning fasteners in glass with channels in panel.

(3) Position stabilizer guides in track panel, align with fasteners in glass and install screws.

(4) Insert glass and track panel into door, sliding assembly rearward approximately four inches, to allow clearance for the U-nuts.

(5) Slide track panel off of glass, until up-stops on glass find clearance to enter door opening.

MyMopar.com

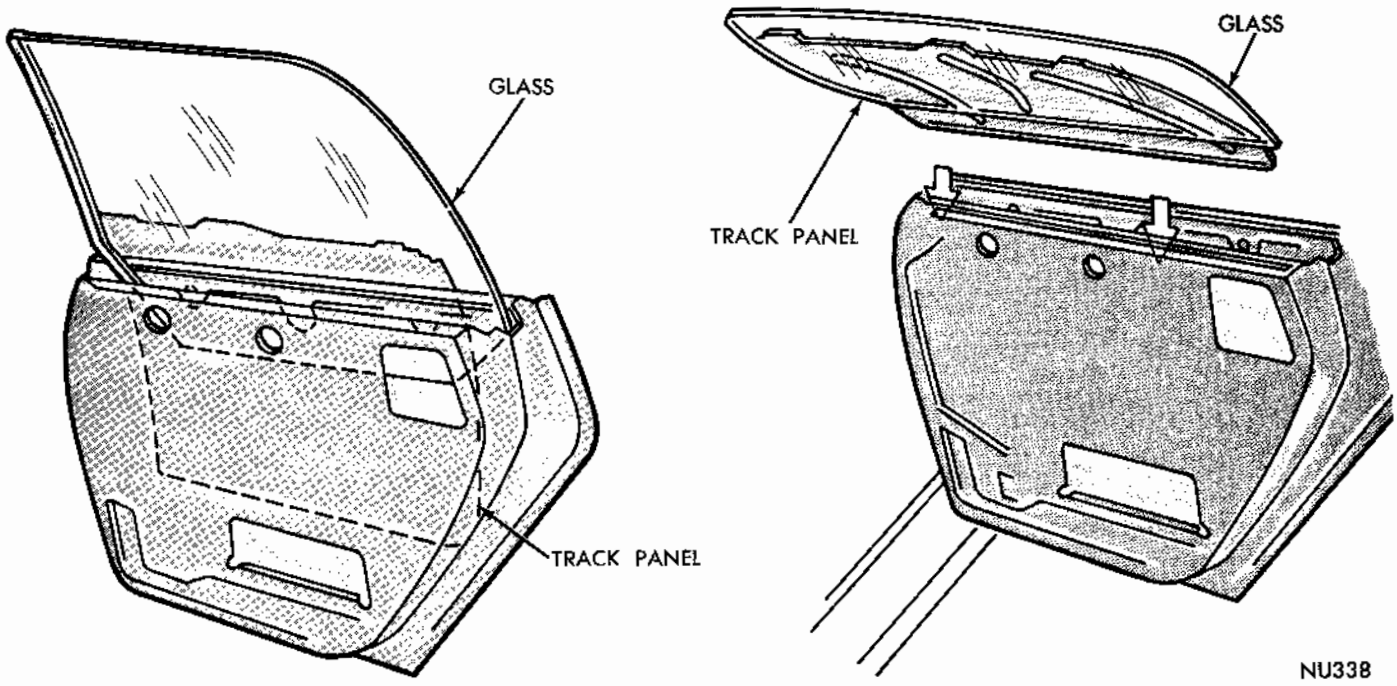

Fig. 30 - Glass and Track Panel Replacement

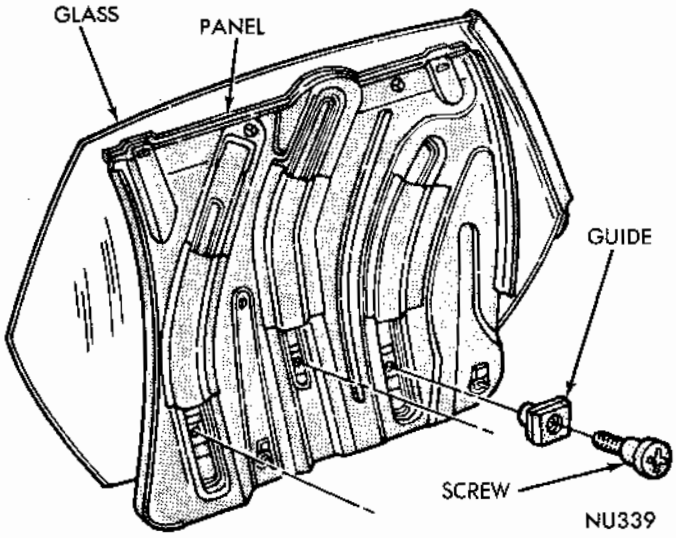

Fig. 31 - Track Panel Stabilizer Guides

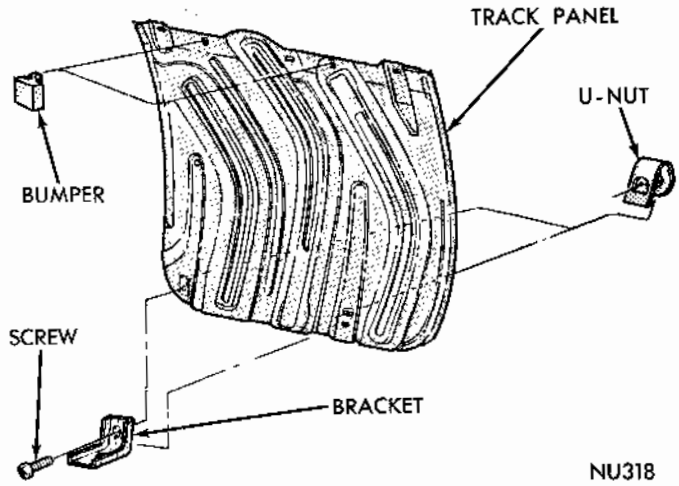

Fig. 32 - Track Panel Assembly

(6) Slowly lower track panel completely to bottom of door, moving it forward approximately four inches, at the same time and positioning behind the down-stop brackets.

(7) Slowly lower the glass assembly until it is positioned on down-stop bumpers.

(8) Raise glass sufficiently to allow installing the down-stop to track panel screws.

(9) Install track panel to door panel screws, screws at panel top edge.

(10) Align holes in glass lift bracket with fasteners in glass and install screws.

(11) Install up-stop brackets on door inner panel.

UP-STOPS

The rear up-stop (Fig. 27) is attached to slotted areas in the door shut face between the inner and outer panels. The front up-stop (Fig. 27) is attached to slotted areas of the inside panel through the glass opening between inner and quarter panel at upper front corner.

GLASS ASSEMBLY

The door glass to lift channel fasteners are a press fit in glass (Fig. 29) as are the glass to track and guide fasteners. The glass up-stops are retained in the glass with screws.

MyMopar.com

GLASS LIFT BRACKET

The glass lift bracket (Fig. 28) is positioned over sliding blocks on the regulator arms. Screws are used to secure the lift channel to the glass fasteners. Lubricate the sliding block contact areas of the lift channel sparingly.

REGULATORS

The manual and electric operated regulators (Fig. 24) are attached to the door inner panel with screws.

Refer to the Electrical Group for test procedures and wiring diagrams for electric operated regulators.

REGULATOR MOTOR REPLACEMENT

When necessary to remove motor from regulator, it is imperative the linkage be securely clamped in a vise to lock it in place. Failure to do this allows the assist spring to drive the mounting bracket around the lift pivot.

Window Lift Switch

Slide a thin blade behind the switch housing (front and back) to depress retaining clips and pull switch out from panel. Carefully separate multiple terminal block from switch body and remove switch from panel.

QUARTER PANELS

GARNISH MOULDINGS

The garnish mouldings should be aligned and held in position to assure satisfactory alignment. Do not over-tighten screws, or moulding will become damaged at screw hole area.

TRIM PANELS

To remove quarter window trim panel it is first necessary to remove the rear seat cushion and back. Quarter window trim panels are retained with screws and clips. When installing trim panel, make certain watershield (Fig. 33) is properly cemented and positioned.

HANDLES

The regulator handle is attached with an allen screw.

WATERSHIELDS

Refer to Figure 33 for sealing and application areas of the watershield.

BELT LINE WEATHERSTRIP

The belt line weatherstrip is retained on the outer panel with spring type retainers.

GLASS ADJUSTMENTS

The circled numbers shown on the glass adjustment reference illustrations indicate the particular step number being read in the adjustment procedure.

Prior to adjusting glass, all doors must be correctly fitted in their opening and the weatherstrips

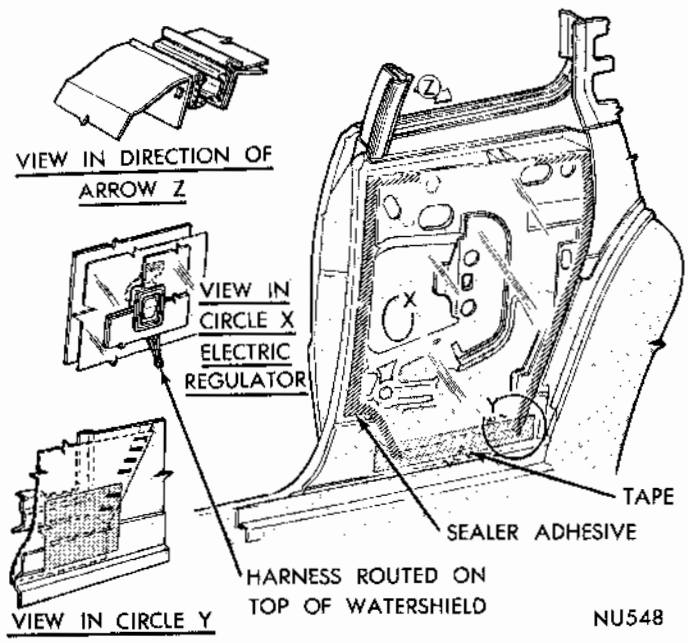

Fig. 33 - Quarter Panel Watershields

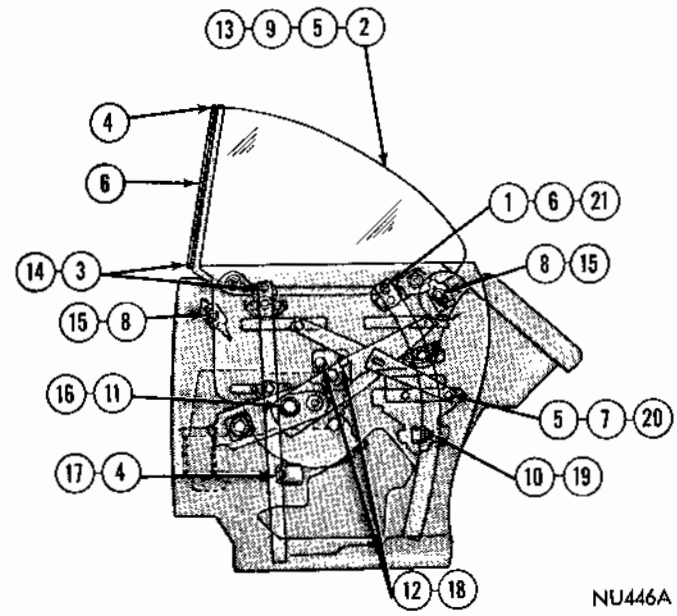

Fig. 34 - Quarter Window Adjustments - Hardtop

MyMopar.com

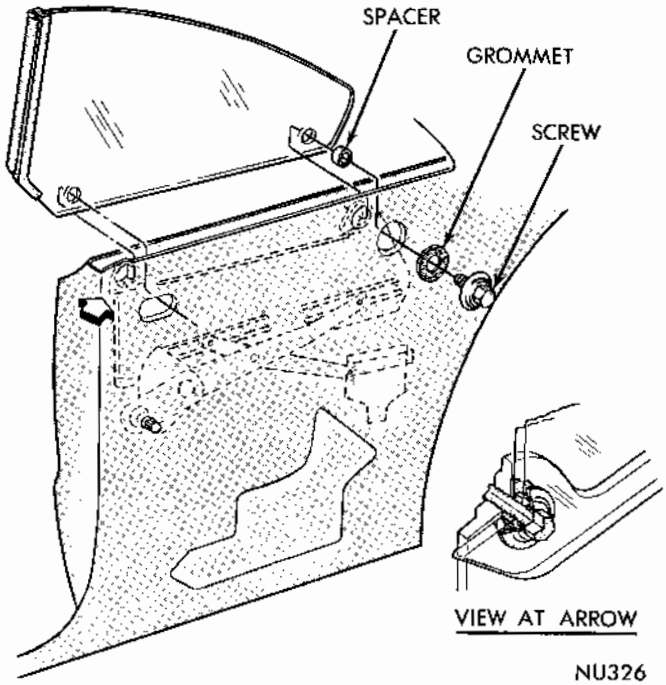

Fig. 35 - Glass Replacement

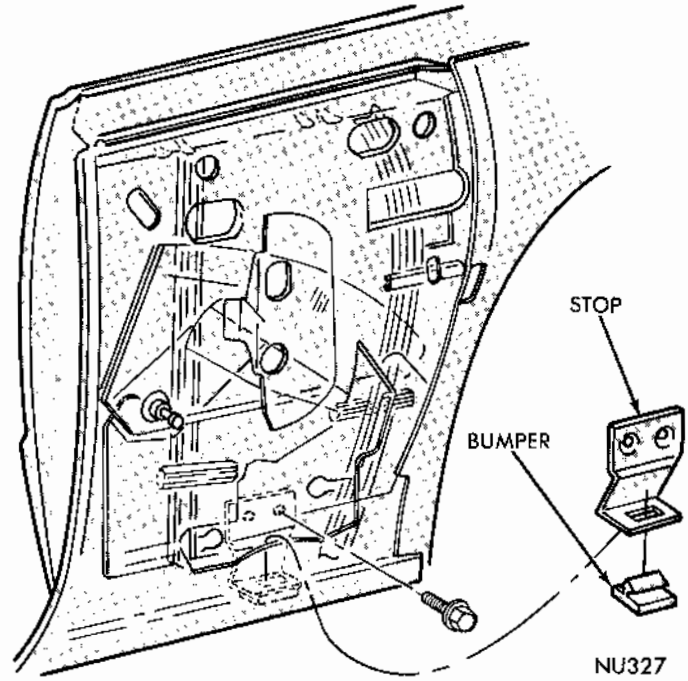

Fig. 36 - Down Stops

at the "A" post and roof rails must be properly installed.

Refer to the adjustment illustration and loosen the attaching screws and nuts of the various components affecting glass adjustment.

QUARTER WINDOW (HARDTOP)

Adjustments (Fig. 34)

(1) Adjust upper rear track so rear of glass lightly touches outer panel belt weatherstrip.

(2) Raise glass fully so top of glass is seated fully against roof rail weatherstrip and flushing front of glass with top of front door glass.

(3) Adjust upper front track attachment so front of glass is aligned with rear of front door glass at belt line and snug secure nut.

(4) Adjust lower front track attachment so front of glass is aligned with rear of front door glass at roof rail and snug secure screw.

(5) Adjust pivot bracket so top of glass is fully against and parallel to adjusting bead on roof rail weatherstrip. Snug secure nuts.

(6) Loosen sleeve nut and move upper rear track attachment forward so weatherstrip and front of glass is against front door glass. Snug secure nut.

(7) Loosen pivot bracket nuts, adjust pivot bracket and snug secure nuts.

(8) Position front and rear up stops down against glass lower frame and snug secure screws.

(9) Lower glass until glass top edge is even with or slightly below belt line of outer panel.

(10) Snug secure lower rear track adjusting screw.

(11) Position stop on regulator plate against stop on sector and snug secure nut.

(12) Position down stops against bumpers and snug secure screws.

(13) Operate window and inspect alignment. Tighten callouts 14 through 21 securely.

GLASS REPLACEMENT

Removal

(1) Align glass lower frame to glass attaching screws with acess holes in quarter inner panel (Fig. 35).

(2) Support glass, remove lower frame to glass attaching screws and remove glass assembly from panel.

(3) Remove spacers from openings in glass.

Installation

(1) Position spacers in openings of glass lower frame.

(2) Install grommets on glass retaining screws.

(3) Align glass lower frame attaching holes with access openings in quarter inner panel.

(4) Lower glass into quarter panel, align openings in glass with holes in lower frame and install screw and grommet assemblies.

DOWN STOP

The down stop bracket and bumper (Fig. 36) is attached to the outboard side of the glass lower frame assembly with screws.

MyMopar.com

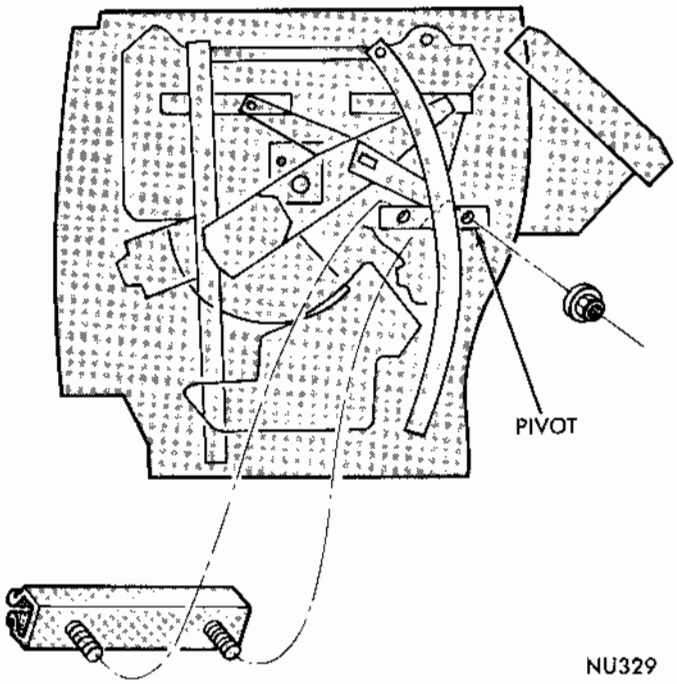

Fig. 37 - Pivot Bracket

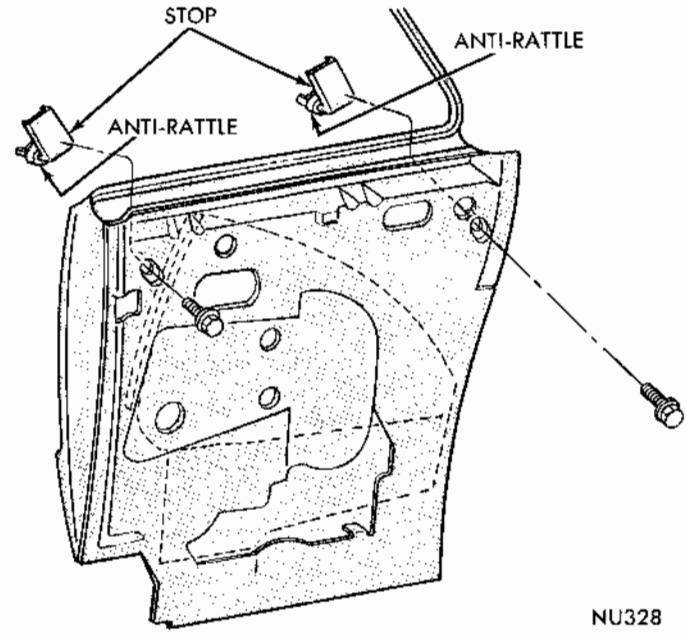

Fig. 38 - Up-Stops

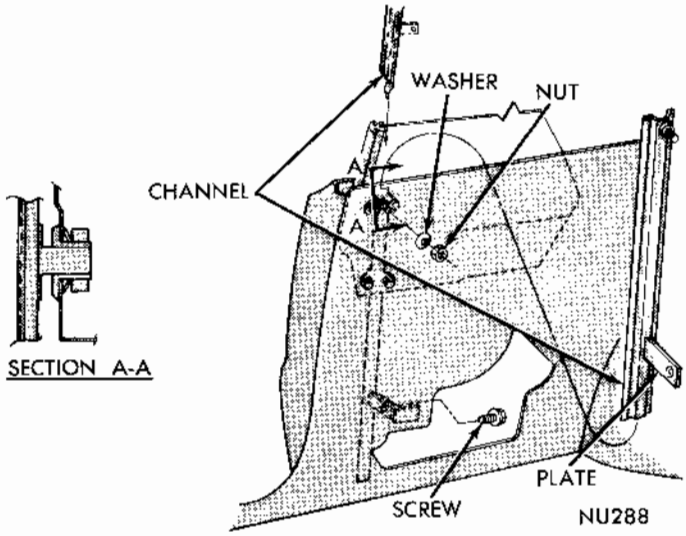

Fig. 39 - Front Track Assembly

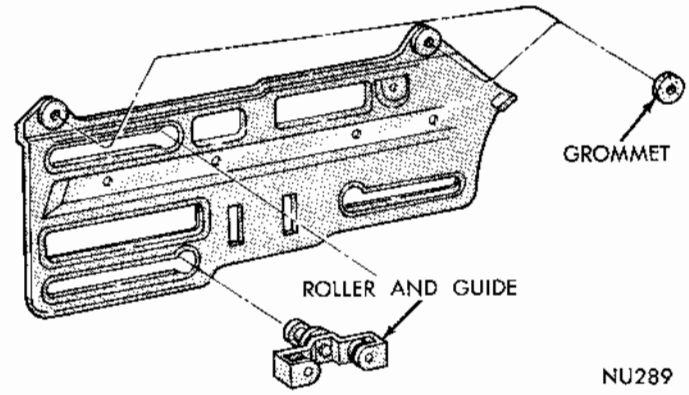

Fig. 40 - Glass Lower Frame Assembly

PIVOT BRACKET

The pivot bracket assembly (Fig. 37) is positioned to the roller side on the regulator idler arm. The bracket weld screws are inserted through a support welded to the quarter inner panel and retained with nut assemblies.

UP-STOPS

The up-stops (Fig. 38) are attached to slotted areas on the quarter inner panel with screws. An anti-rattle type grommet is positioned over each up-stop flange.

FRONT TRACK

Removal

(1) Remove nut and washer from sleeve nut at upper end of track (Fig. 39).

(2) Remove track lower plate to support screw.

(3) Push track inward and move track and roller assemblies rearward to disengage rollers from glass lower frame.

(4) Remove track and rollers out of panel through large access hole.

(5) Remove roller assemblies from track (Fig. 40).

Installation

(1) Position roller and guide assemblies on track.

(2) Insert track assembly in quarter panel.

(3) Position roller assemblies into slots of glass lower frame (Fig. 40).

(4) Insert sleeve nut on upper end of track into

MyMopar.com

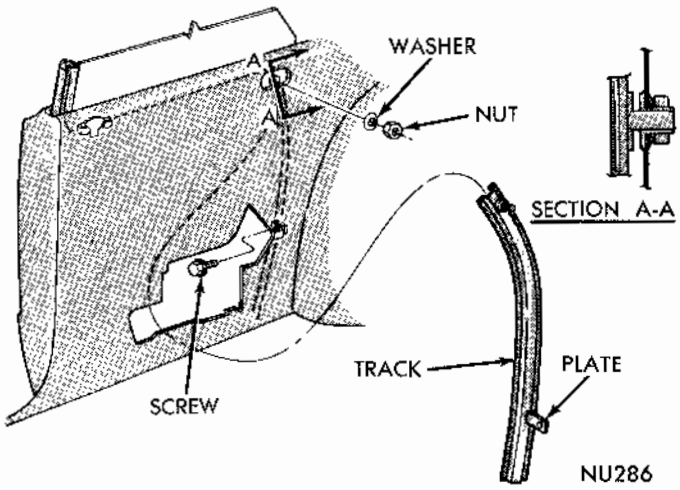

Fig. 41 - Rear Track

hole of inner panel (Fig. 39).

(5) Align track lower plate to support and secure with screw.

(6) Place spring washer, concave side facing out-board, on track upper sleeve nut and install retaining nut.

REAR TRACK

Removal

(1) Remove nut and washer from track upper sleeve nut (Fig. 41).

(2) Remove track lower plate to support screw.

(3) Push track inward and move track and roller assembly forward to disengage roller from slot in glass lower frame.

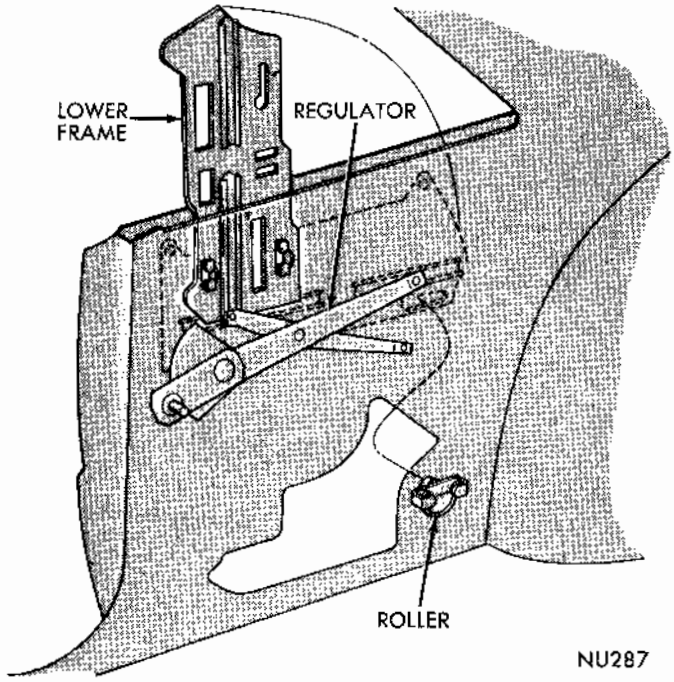

Fig. 42 - Glass Lower Frame Replacement

(4) Remove track and roller assembly out of panel through large access opening.

(5) Remove roller assembly from track.

Installation

(1) Position roller assembly on track and insert assembly into quarter panel through large access opening.

(2) Position roller assembly into slot of glass lower frame.

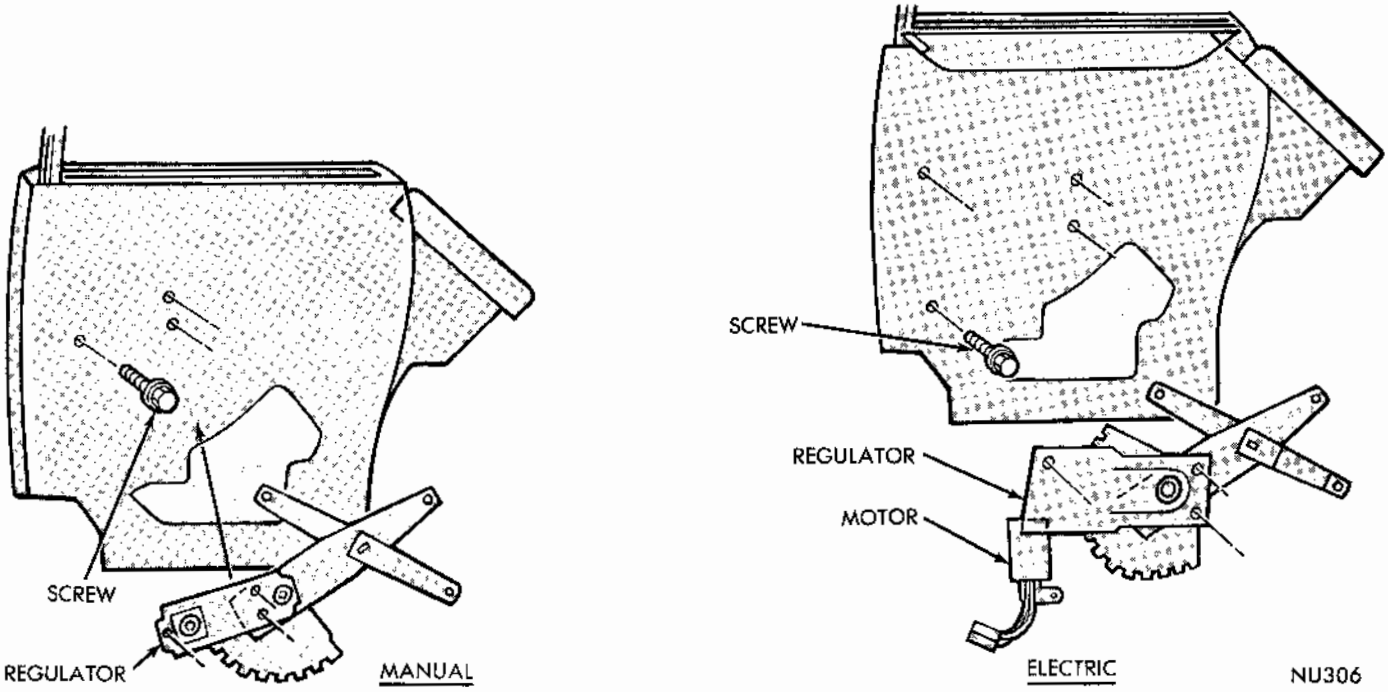

Fig. 43 - Regulator Assemblies

MyMopar.com

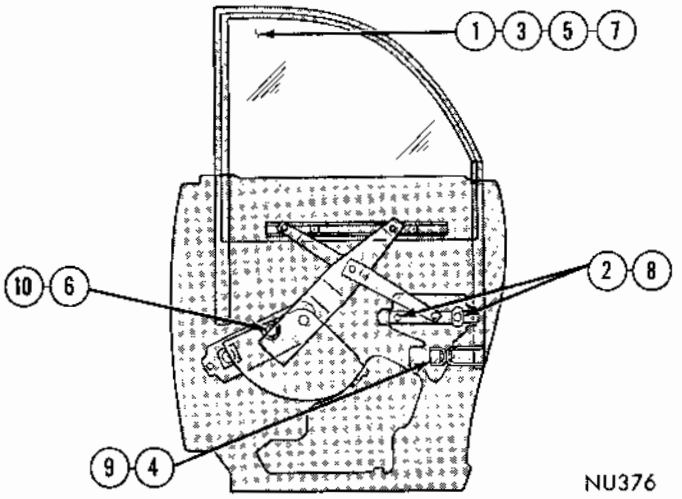

Fig. 44 - Quarter Window Adjustments - Sedan

(3) Insert track upper sleeve into hole of inner panel.

(4) Align track lower plate on support and secure with screw.

(5) Place spring washer, concave side facing out-board, on sleeve nut and install retaining nut.

GLASS LOWER FRAME

Removal (Fig. 42)

(1) Remove quarter glass assembly.

(2) Remove rear track upper and lower attachments and move track and roller assembly forward to disengage roller assembly from glass lower frame.

(3) Move lower frame assembly to disengage channel from regulator arm rear slide.

(4) Raise rear of lower frame and remove from quarter.

(5) Remove roller and guide assemblies from lower frame.

Installation

(1) Inspect glass lower frame to be sure grommets are installed at the upper outer holes (Fig. 40).

(2) Insert roller and guide assemblies into lower frame front upper and lower slots.

(3) Slide front end of lower frame into panel and engage front of lift channel to slide on regulator front arm (Fig. 42).

(4) Turn frame to normal position and engage rear channel to regulator rear arm slide.

(5) Position roller and guide assembly, on rear track, into rear slot of lower frame.

(6) Install rear track assembly on inner panel.

(7) Install glass assembly.

Regulators

The manual and electric operated regulators (Fig. 43) are attached to the door inner panel with screws.

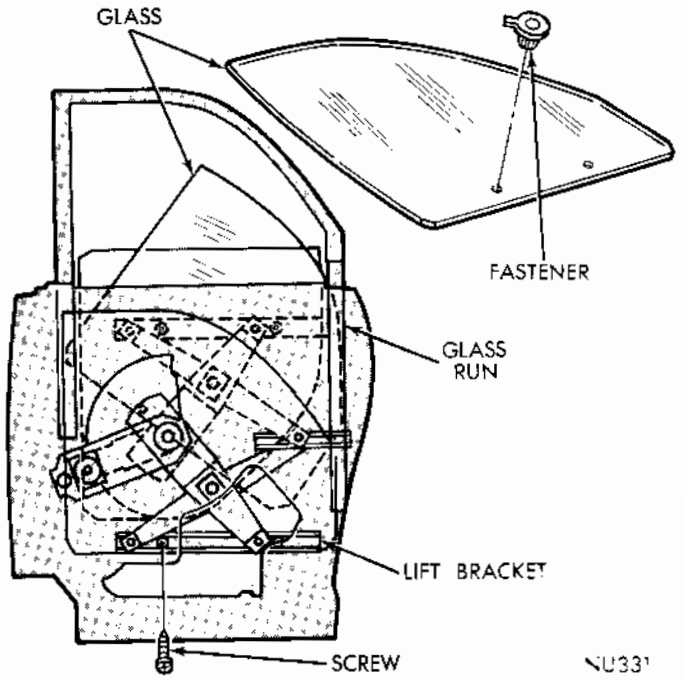

Fig. 45 - Quarter Window Replacement

Refer to the Electrical Group for test procedures and wiring diagrams for electric operated regulators.

REGULATOR MOTOR REPLACEMENT

When necessary to remove motor from regulator, it is imperative the linkage be securely clamped in a vise to lock it in place. Failure to do this allows the assist spring to drive the mounting bracket around the lift pivot.

WINDOW LIFT SWITCH

Slide a thin blade behind the switch housing (front and back) to depress retaining clips and pull switch out from panel. Carefully separate multiple terminal block from switch body and remove switch from panel.

GLASS ADJUSTMENTS (SEDAN MODELS)

(1) Raise glass to approximately 1/8 inch below window opening frame.

(2) Adjust regulator pivot bracket (Fig. 44) so gap between top of glass and window opening frame is constant. Tighten pivot bracket nuts.

(3) Run glass approximately 2/3 way down.

(4) Allow glass to set rear run retainer for in-out position and snug tighten lower bracket screw.

(5) Lower window until top of glass is even with or slightly below outer panel belt line weatherstrip.

(6) Position stop on regulator plate against stop on sector and snug tighten locknut.

MyMopar.com

(7) Test operation and inspect alignment of glass. Tighten Callouts 8, 9 and 10 securely.

GLASS REPLACEMENT

Removal

(1) Lower glass fully and remove lift channel to glass fasteners screws (Fig. 45).
(2) Through large access hole, rotate glass clockwise to remove from front and rear run channels.
(3) Raise glass assembly out of panel.
(4) Remove fasteners from glass assembly (Fig. 45).

Installation

(1) Insert glass lift fasteners into glass from inner glass surface side.
(2) With rear edge of glass facing down, lower glass assembly into quarter panel.
(3) Through large access opening, rotate glass counterclockwise to engage front and rear edges in glass runs.
(4) Lower glass and align lift fasteners to holes in lift channel.
(5) Secure glass to lift channel with screws.
(6) Test operation of quarter window.

GLASS RUN AND WEATHERSTRIP RETAINERS

Removal

(1) Remove glass assembly.
(2) Remove run from front top and rear retainers (Fig. 46).
(3) Remove weatherstrips and screws securing weatherstrip retainers to roof rail and lock pillar.
(4) Remove weatherstrip retainers from quarter panel.

Installation

(1) The weatherstrip retainer seal is a self adhesive type.
(2) Insert retainer front leg in panel opening and align attaching holes with holes in body panel (Fig. 46).
(3) Secure retainer to roof rail with screw, beginning with hole at radius.
(4) Secure retainer to lock pillar with screw.
(5) Position upper weatherstrip to retainer and index to front corner and tab of retainer.
(6) Press weatherstrip into retainer.
(7) Position glass front run to retainer, loading bottom leg between panels at belt line.
(8) Index upper front corner, making a water tight joint and to tab at bottom of retainer.
(9) Press into retainer full length to secure.
(10) Through large access hole, position rear run to retainer, indexing to lower end of roof rail weatherstrip to create a seal.
(11) Press securely into retainer for full length.
(12) Install quarter window assembly.

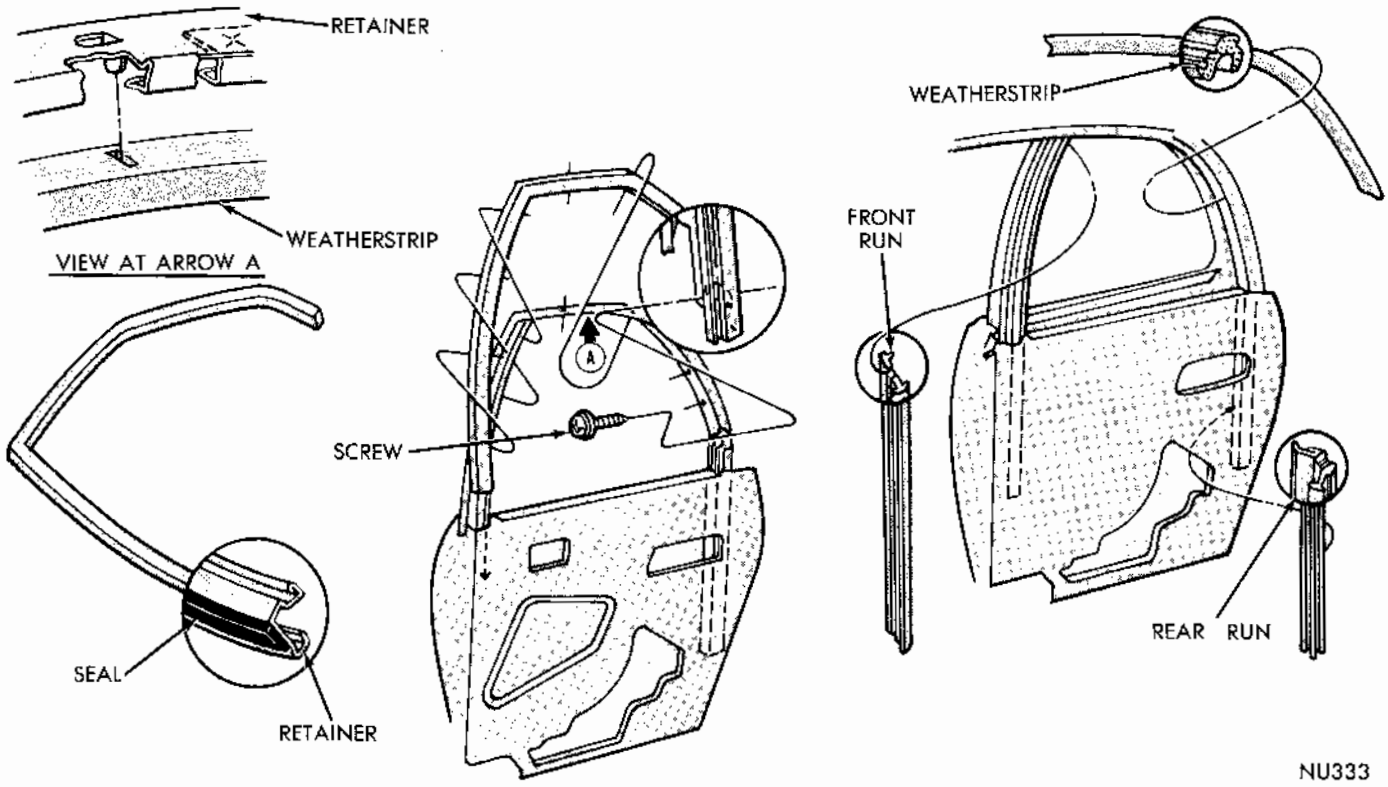

Fig. 46 - Weatherstrip Retainer and Runs

MyMopar.com

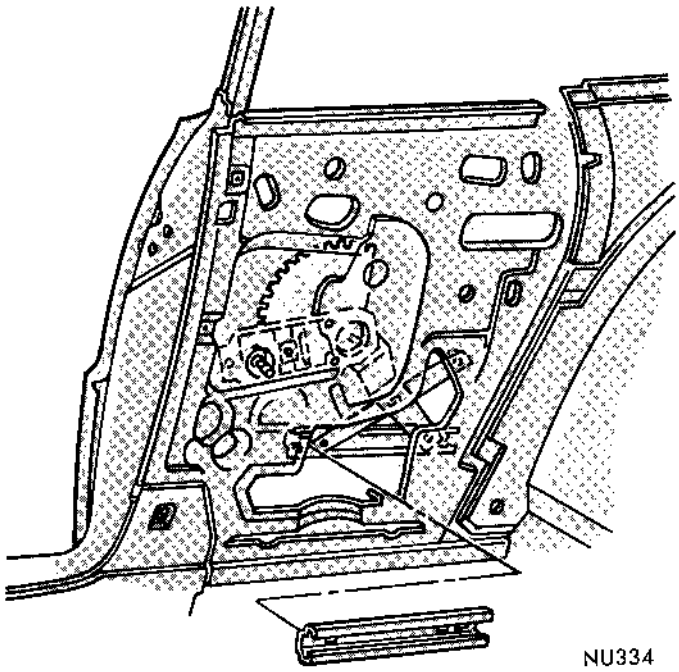

Fig. 47 - Glass Lift Bracket

GLASS LIFT CHANNEL

The lift channel (Fig. 47) is positioned over slides on the regulator arms and to the glass assembly with screws.

GLASS-TAILGATE

Adjustments

The circled numbers shown on the glass adjustment reference illustration (Fig. 48) indicate the particular step number being read in the adjustment procedure.

Prior to adjusting glass, the tailgate must be correctly fitted to its opening, the inner belt weatherstrip installed and all glass and related hardware component attaching screws and nuts loosened.

(1) With tailgate opened in tailgate position, push glass against belt inner weatherstrip and snug secure upper screws of lower glass run channel.

(2) With tailgate closed, from inside body, run glass up far enough to engage and align lower end of upper run channel. Snug secure bottom screw in upper run channel.

(3) Align top end of upper run channel with tailgate header run retainer and snug secure screws.

(4) Raise glass to approximately 1/8 inch below roof rear glass run and adjust regulator so top of glass is parallel to roof glass run. Snug secure regulator attaching nuts.

(5) Open tailgate to gate position and secure lower nut on glass of tailgate.

(6) Close tailgate, test for ease of operation and inspect alignment.

Tighten callouts 7, 8 and 9 securely.

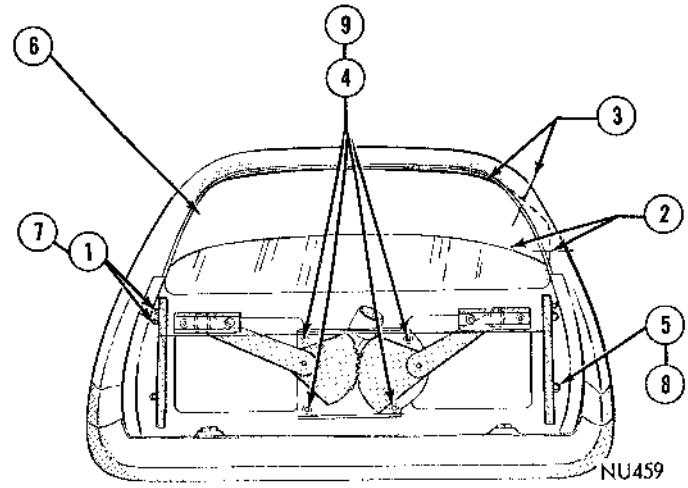

Fig. 48 - Tailgate Glass Adjustments

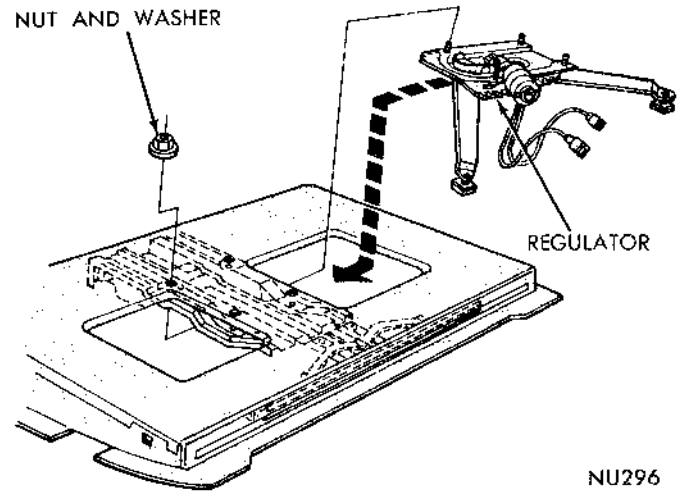

Fig. 49 - Regulator Assembly

GLASS REPLACEMENT

Removal

(1) Support glass at bottom and remove glass to lift bracket screws (Fig. 48).

(2) Slide glass up and out of door.

(3) Remove lift channel fasteners from glass.

Installation

Utmost care must be used to prevent lubricant from touching wiper blades.

(1) Apply lubricant to surfaces of glass lift channel contacting regulator sliding block.

(2) Install lift channel fasteners in glass.

(3) Lower glass into runs of lower glass channels to a position under the lift channel on each regulator arm.

(4) Align holes in lift channels with glass lift fasteners and secure with screws.

MyMopar.com

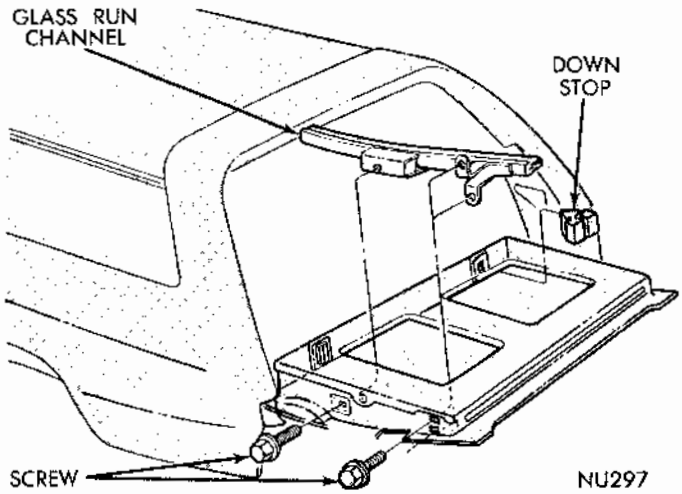

Fig. 50 - Glass Run Channel

GLASS LIFT CHANNELS

To replace the glass lift channels (Fig. 48) it is necessary to first remove the glass assembly. The channels are positioned over sliding blocks on the regulator arms.

REGULATOR REPLACEMENT

The electric regulator assembly is retained on the tail gate inner panel with nut and washer assemblies (Fig. 49). **Be sure wiper actuator mechanism is in OFF-GLASS position during replacement of regulator.**

Removal

(1) Remove tail gate glass and glass lift channels.
(2) Disconnect electrical leads at regulator.
(3) Remove regulator at inner tail gate panel nut and washer assemblies.
(4) Remove regulator assembly through large access hole on right side.

Installation

(1) Position regulator in tail gate through large access hole on right side.
(2) Position regulator mounting studs in holes of inner panel and install nut assemblies. **It may be necessary to tilt and secure one corner of regulator mounting, then the opposite corner and finally the remaining two nuts on units equipped with the window washer assembly.**
(3) Connect electrical leads.
(4) Position glass lift channels on regulator sliding blocks.
(5) Install tail gate glass assembly.

GLASS RUN CHANNEL

Removal

(1) Remove the tail gate glass assembly.
(2) Remove tail gate pillar to glass run channel screws (Fig. 50).
(3) Remove channel assembly through access holes in inner panel.

Installation

(1) Position channel assembly into tail gate and align to upper and lower holes in tail gate pillar.
(2) Secure channel to pillar with screws.
(3) Install glass assembly.

SIDE GLASS

CORONET-CHARGER

INDEX

	Page
Door Glass Regulator	24
Regulator Motor Replacement	24
Glass Adjustments	23
Fore and Aft	23
Glass Adjustments Hardtop	23
In and Out	23
Parallelism	23
Glass Replacement	23
Installation	23
Removal	23
Hardtop Models	25
Adjustments	25
Glass Replacement	25
Installation	25
Regulator Assembly	25
Removal	25
Rear Doors	24
Adjustments	24
Tailgate	26
Adjustments	26
Glass	26
Glass Replacement	26
Glass Run Channels	27
Installation	27
Removal	27
Regulator Replacement	27

MyMopar.com

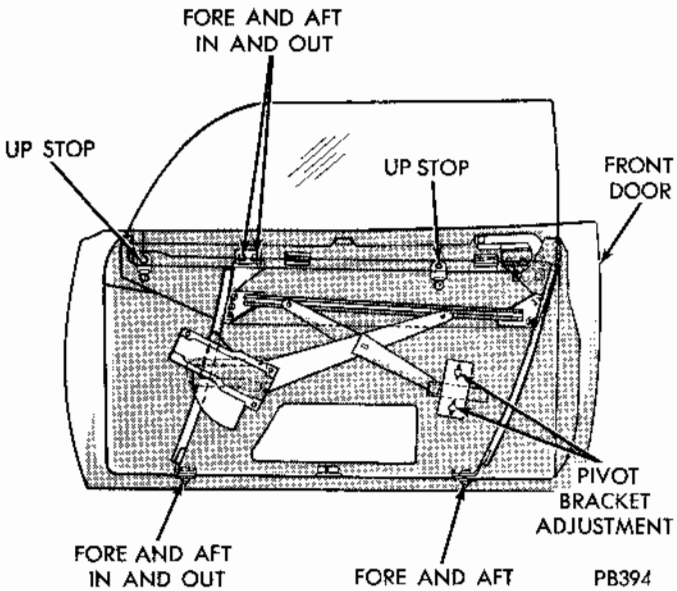

Fig. 1 - Hardtop Front Door Glass Adjustments

GLASS ADJUSTMENTS

Prior to adjusting glass, all doors must be correctly fitted in their opening and the weatherstrips at the 'A' post and roof rails must be properly installed.

Refer to the adjustment illustration and loosen the attaching screws and nuts of the various door components affecting glass adjustment.

Service procedures for components related to the door glass follow the glass adjustment procedures.

GLASS ADJUSTMENTS HARD TOP

Adjustments - Ventless Door (Fig. 1)

Fore and Aft

(1) Raise glass completely.

(2) Move glass fore or aft to set glass to belt line weatherstrip.

(3) Tighten glass track upper bracket at belt line.

Parallelism of Glass to Primary Seal

(4) Move pivot bracket up or down and set glass parallel to weatherstrip.

(5) Tighten pivot bracket.

(6) Adjust up-stops.

In-Out and Secondary Seal

(7) Move bottom of front track to create an effective glass to weatherstrip secondary seal.

(8) Tighten glass track to lower bracket screw.

(9) Tighten track lower bracket and retainer to inner panel nut assembly.

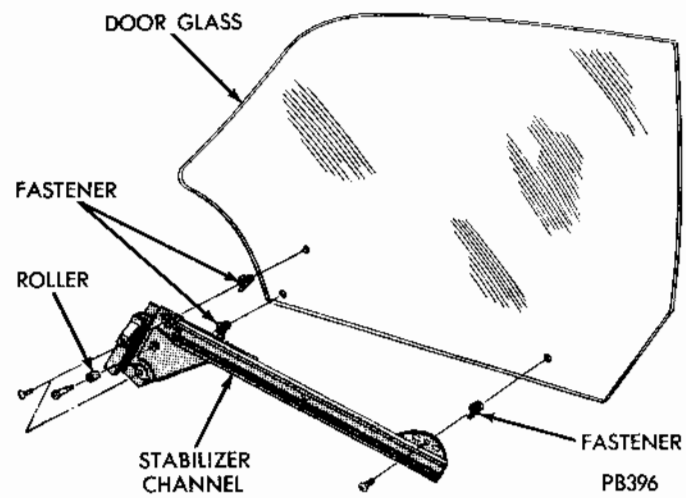

Fig. 2 - Front Glass Attachment

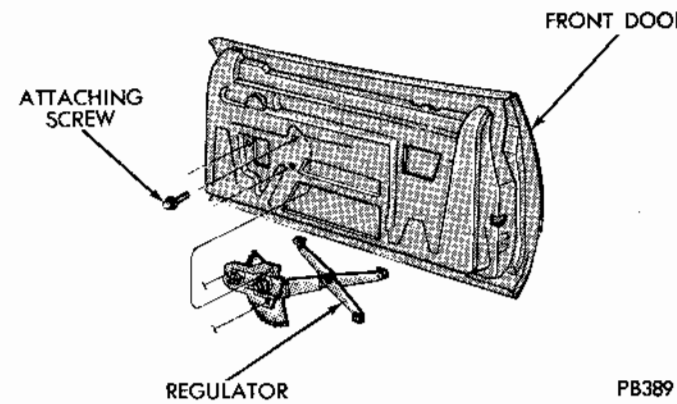

Fig. 3 - Front Door Regulator Assembly

Front and Rear Track Parallelism

(10) Run glass approximately 2/3 way down.

(11) Tighten glass rear run channel and bracket assembly lower bracket nut assembly.

Down Stop-Manual

(12) Lower glass until top edge of glass is even with or slightly below belt line of door outer panel. **Do not allow glass to drop below weatherstrip on door outer panel.**

(13) Position stop on regulator plate against stop on sector.

(14) Tighten regulator plate stop locknut.

GLASS REPLACEMENT

Removal

(1) Remove screws attaching stabilizer channel to glass (Fig. 2).

(2) Raise door glass assembly out of door.

(4) Remove fasteners.

Installation

(1) Place glass on table with outside of glass fac-

MyMopar.com

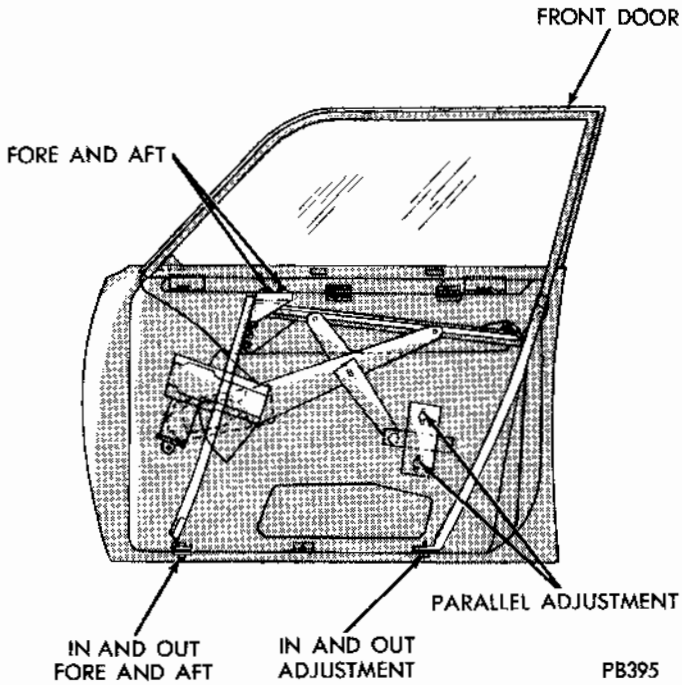

Fig. 4 - Sedan Front Door Glass Adjustments

ing downward.

(2) Install fasteners.

(3) Install door glass assembly into door.

(4) Align holes in stabilizer channel with fasteners in glass and secure with screws.

DOOR GLASS REGULATOR

The manual and electric operated regulators (Fig. 3) are attached to the door inner panel with screws.

Refer to the 'Electrical Group' for test procedures and wiring diagrams for electric operated regulators.

Regulator Motor Replacement

When necessary to remove motor from regulator, it is imperative the linkage be securely clamped in a vise to lock it in place. Failure to do this allows the assist spring to drive the mounting bracket around the lift pivot.

SEDAN AND STATION WAGON

Adjustments (Fig. 4)

(1) Run glass all the way up.

(2) The front track upper attachment should be loosened and this will allow glass to seat in the upper door frame.

(3) The front and rear track can be adjusted in and out.

(4) The front track can be adjusted fore and aft.

(5) The pivot bracket provides parrellel adjustment.

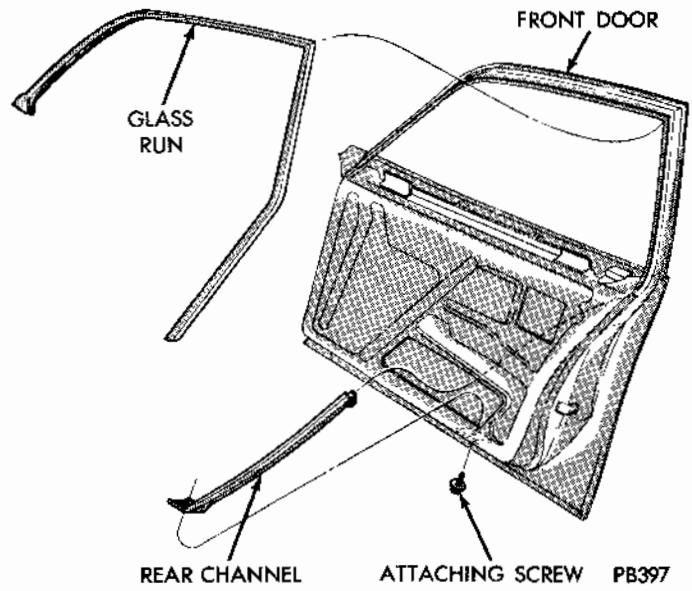

Fig. 5 - Sedan Glass Run and Channel

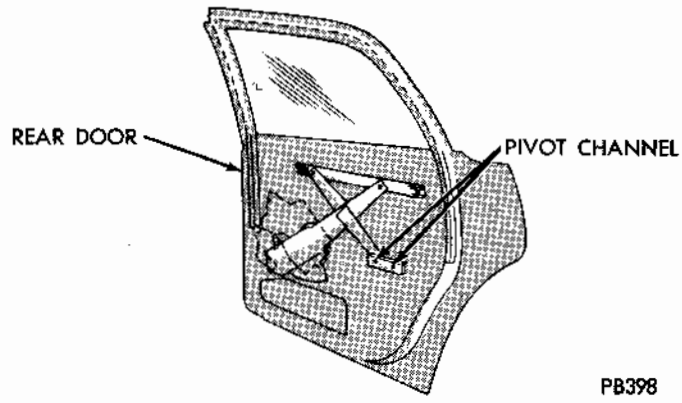

Fig. 6 - Sedan Rear Door Glass Adjustments

Glass Run and Channel

The glass run (Fig. 5) is a press fit in the door frame and lower run channel. The index notch at the door upper corner should be positioned first to assure correct installation of the run. The lower run channel is positioned over the window opening frame from inside the door through the large access opening.

REAR DOORS

SEDAN MODELS

Adjustments

(1) The glass should be in fully raised position.

(2) Loosen the pivot channel attaching screws this allows the glass to seat in the door frame.

SEDAN MODELS

Two door sedan models are equipped with a vent wing type quarter window (Fig. 7). Elongated

MyMopar.com

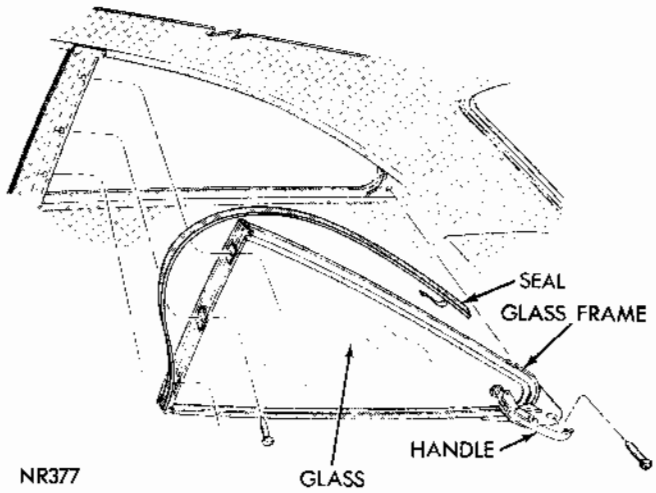

Fig. 7 - Quarter Window Vent Glass

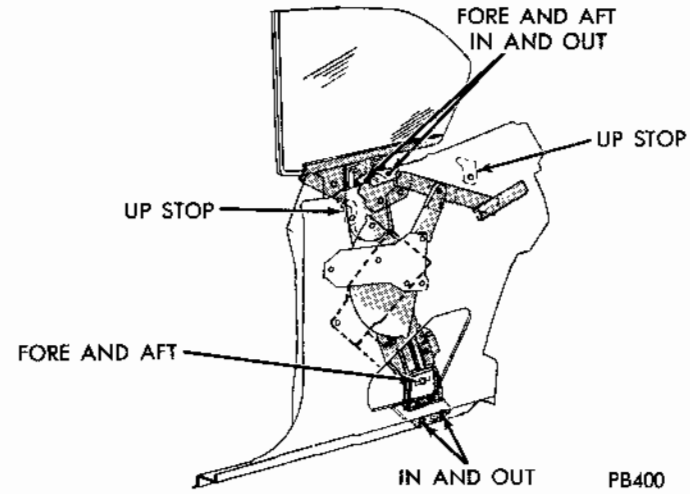

Fig. 8 - Rear Quarter Glass Adjustments

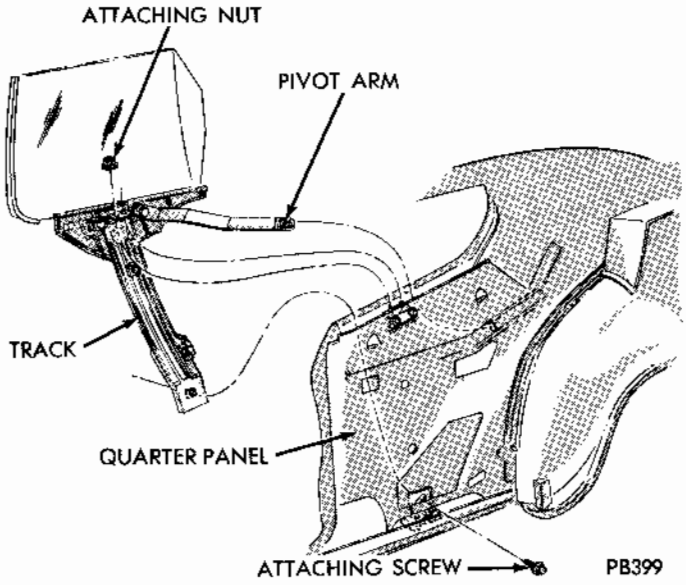

Fig. 9 - Hardtop Quarter Window Glass Replacement

holes in the hinge allow correct positioning of the glass assembly to the opening. The release handle assembly is attached to the glass with a grommet, washer, retainer and screw.

HARDTOP MODELS

Adjustments

(1) With door closed, adjust quarter window track (Fig. 8) at upper attachment until rear of glass lightly touches belt line weatherstrip.

(2) Raise window seating top of glass against roof rail weatherstrip and front of window level with top of front door window.

(3) Adjust upper track until front of window is aligned with rear of front door window.

(4) Adjust lower front until front of window is aligned rear of front door window at roof rail.

(5) Adjust pivot bracket until top of window is fully against and parallel to roof rail weatherstrip. To raise front of window, lower front of bracket, to lower, raise bracket.

(6) Move upper track attachment forward and tighten when quarter window weatherstrip is against front door window.

(7) Tighten pivot bracket nuts.

(8) Loosen and position front and rear up stops against glass lower frame and tighten screws.

(9) Lower window until top of glass is even with or slightly below belt line outer panel.

(10) Position and tighten regulator stop against regulator sector stop.

(11) Position and tighten down stop against bumper.

Glass Replacement

Removal

(1) Remove track upper attaching nuts from track (Fig. 9).

(2) Remove attaching screw from lower track.

(3) Work track, glass and pivot arm up and out of quarter panel.

Installation

(1) Apply lubricant to slide areas of lower glass frame and pivot slide.

(2) Position and simultaneously position upper track adjusting bracket slots over studs on upper bracket.

(3) Insert slide on regulator arm into pivot bracket.

(4) Install lower attaching screw and upper track attaching nuts.

Regulator Assembly

The regulator assembly (Fig. 10) is attached to the inner panel with screw and washer assemblies. The regulator arm studs are retained in the glass

MyMopar.com

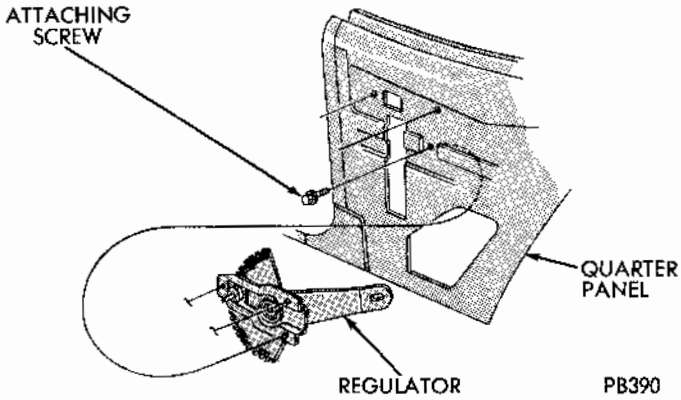

Fig. 10 - Quarter Window Regulator Assembly

lower frame with retainers. Lubricate the regulator tooth contact area approximately 1/2 inch wide along the entire length of the arc on the outboard side of sector and to front and rear arm roller studs.

TAILGATE

GLASS

Adjustments (Fig. 11)

Prior to adjusting glass, the tailgate must be correctly fitted to its' opening, the inner belt weatherstrip installed and all glass and related hardware component attaching screws and nuts loosened.

(1) With tailgate opened in tail gate position, push glass against belt inner weatherstrip and snug secure upper screws of lower glass run channel.

(2) The tailgate glass can be moved from side to side by adjusting the sleeve nut after loosening the jam nut. After sleeve nut has been adjusted tighten jam nut.

(3) Raise glass to approximately 1/8 inch below roof rear glass run and adjust regulator so top of glass is parallel to roof glass run. Snug secure regulator attaching nuts.

(4) Open tailgate to gate position and secure lower nuts on glass run of tailgate.

(5) Close tailgate, test for ease of operation and inspect alignment.

GLASS REPLACEMENT

Removal

(1) Support glass at bottom and remove glass to frame channel screws (Fig. 12).

(2) Slide glass up and out of tailgate.

Installation

(1) Apply lubricant to surfaces of glass regulator sliding blocks.

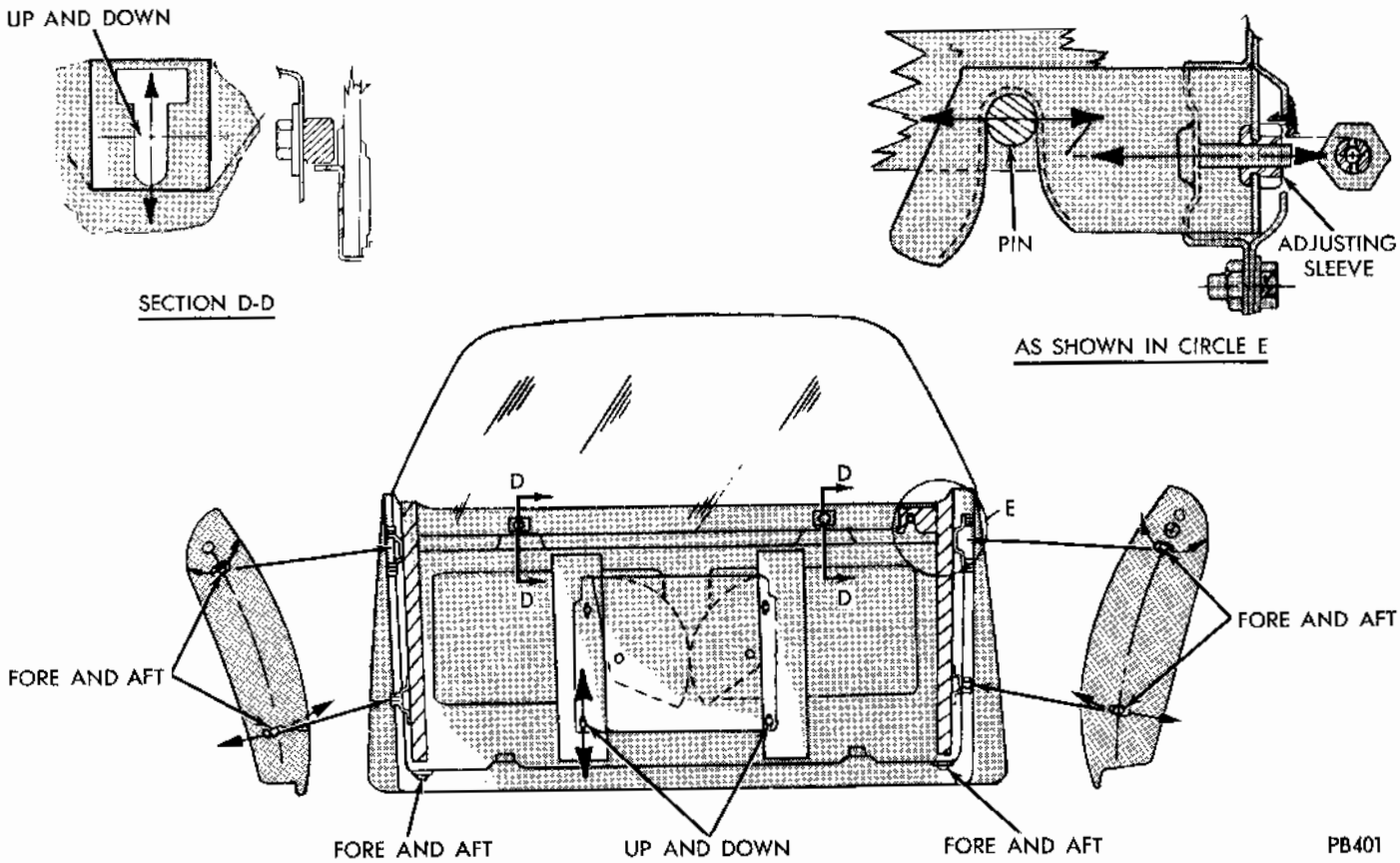

Fig. 11 - Tailgate Glass Adjustments

MyMopar.com

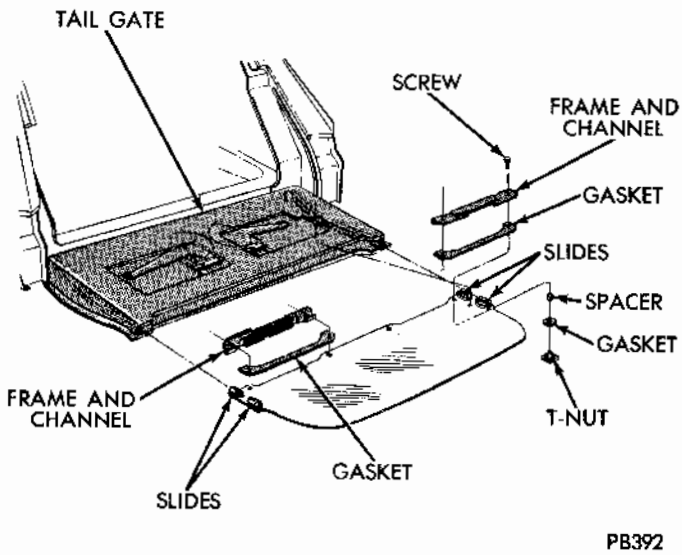

Fig. 12 - Tailgate Glass Attachment

(2) To install glass it will be necessary to force slides outward.

(3) Push glass in runs so that centering pin hole is aligned with pin.

(4) Install gasket, frame channel and glass attaching screws, gaskets and T nut.

Glass Run Channels

Removal

(1) Remove the tailgate glass assembly.

(2) Remove tailgate glass run channel screws (Fig. 13).

(3) Remove channel assembly through access holes in inner panel.

Installation

(1) Position channel assembly into tailgate and align to upper and lower holes in tailgate pillar.

(2) Secure channel to pillar with screws.

(3) Install glass assembly.

Regulator Replacement

The regulator assembly is retained on the tailgate inner panel with four attaching screws (Fig. 14).

Removal

(1) Remove tailgate glass.

(2) Disconnect electrical leads at regulator.

(3) Remove regulator to inner tailgate panel attaching screws.

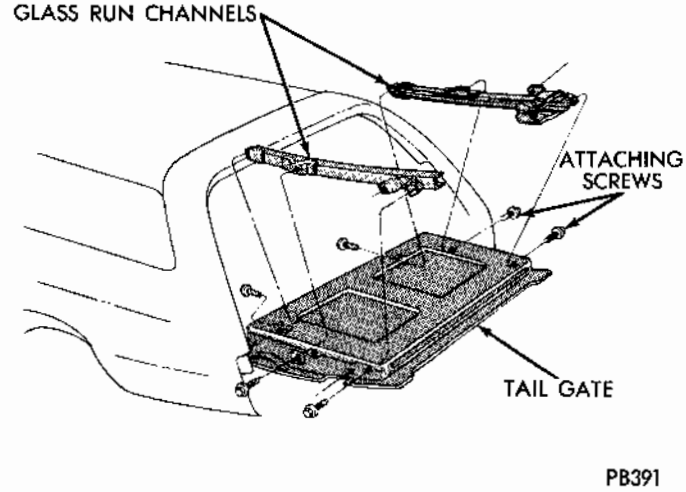

Fig. 13 - Tailgate Glass Run Channels

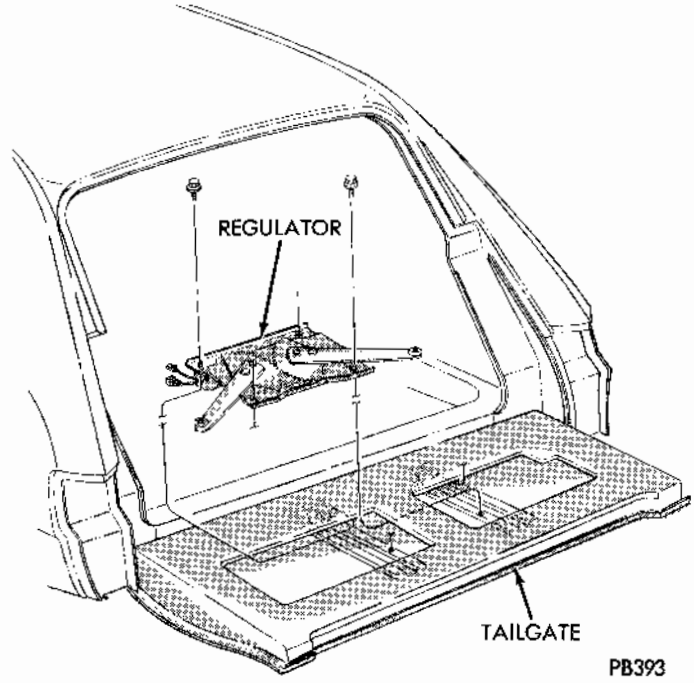

Fig. 14 - Tailgate Regulator Assembly

(4) Remove regulator assembly through access hole.

Installation

(1) Position regulator in tailgate through access hole.

(2) Position regulator mounting screws in holes of inner panel.

MyMopar.com

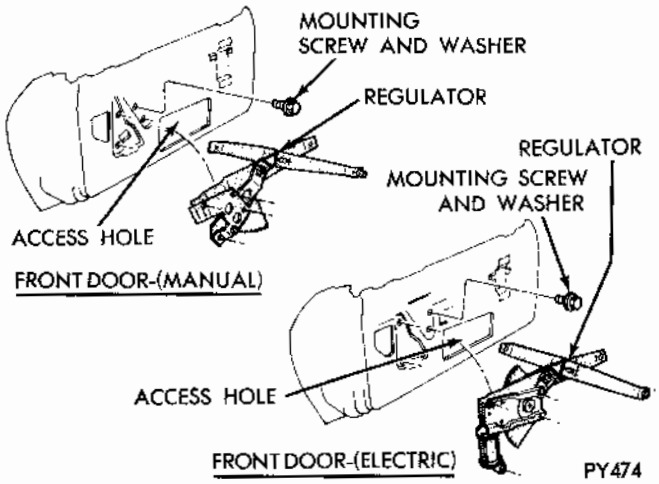

Fig. 6 - Front Door Regulator

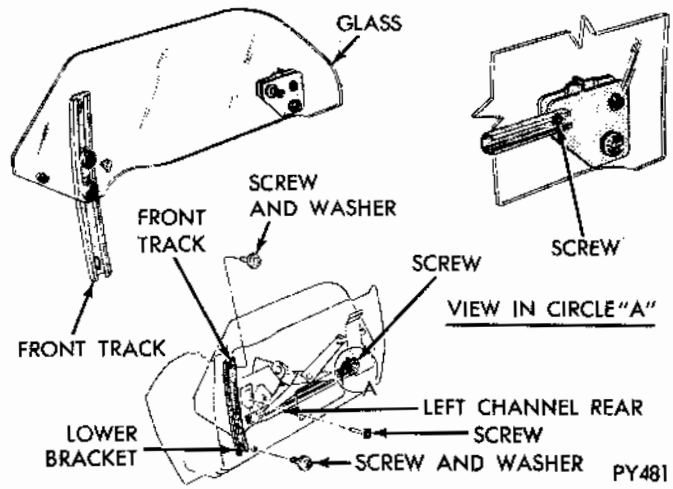

Fig. 7 - Front Door Glass Installation

LOWER FRONT TRACK SUPPORT (Fig. 5)

(1) Install support and retainer assembly thru major access hole in door.

(2) Position to attaching holes and snug secure with screw and washer.

FRONT DOOR REGULATOR (Fig. 6)

(1) Place operating lever arms in desired position for installation.

(2) Install assembly thru major access hole in door, insert idler arm roller in pivot bracket, position mounting plate or electric motor bracket to attaching holes in door inside panel.

(3) Secure with screw and washer to manual window regulator or electric window regulator.

FRONT DOOR GLASS INSTALLATION

(1) Install glass rear stabilizer track slides, front track, up-stops and lift fastener to front door glass opening at belt, hold track from sliding off slides while installing. (Fig. 7)

(2) Lower assembly gently to bottom of door, making sure that glass is outboard of regulator arms and front track is inboard of lower support.

(3) Position front track and bracket assembly to belt reinforcement using access hole in door and snug secure with screw and washer.

(4) Position front track and bracket assembly lower end to support.

(5) Secure with screw and washer.

(6) Raise glass by hand so that lift channel rear attachment slot can be inserted between screw head and washer on rear stabilizer assembly. Push lift channel rearward and secure with loosely installed screw.

(7) Align front slot in lift channel with hole in glass lift fastener and secure with screw to glass front.

QUARTER PANEL GLASS

QUARTER WINDOW GLASS ADJUSTMENT

Numbers shown on glass adjustment reference illustration (Fig. 8) indicates particular step number in adjustment procedure.

Rear track and pivot bracket along with regulators have NO adjustment.

Belt Area Glass Adjustment

(1) Run glass half way up.

(2) Adjust front track upper attachment so that glass touches lightly on weatherstrip at bolt. Loosely secure nut on upper adjusting screw.

Primary Seal

(3) Run glass full up seating top of glass fully against roof rail weatherstrip.

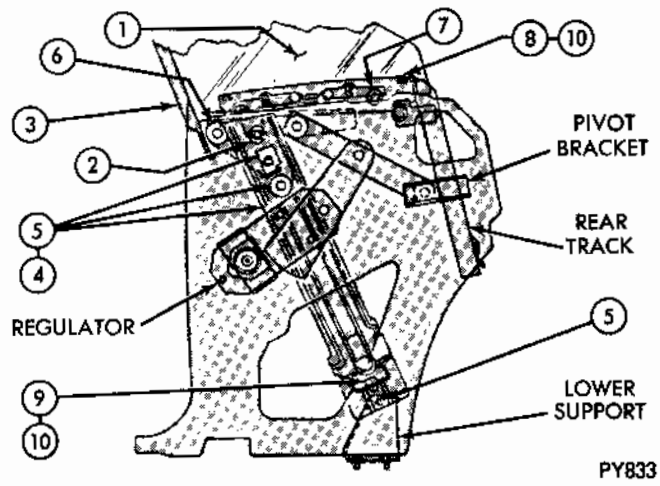

Fig. 8 - Quarter Glass Adjustment

MyMopar.com

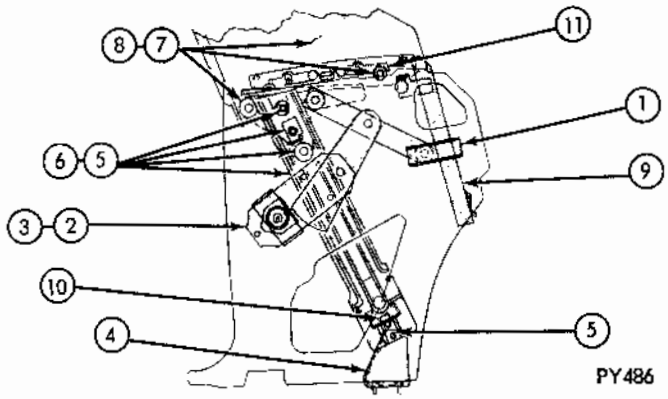

Fig. 9 - Quarter Window Installation

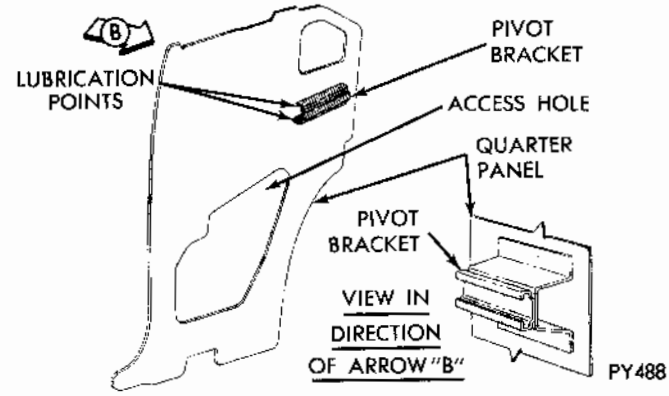

Fig. 10 - Pivot-Bracket Quarter Window

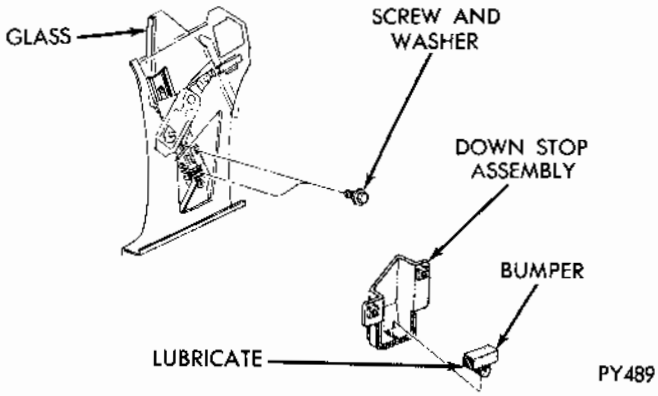

Fig. 11 - Down Stop and Bumper

Flush front of window with top of front door glass rear edge.

(4) Secure jam nut on upper adjusting nut.

Quarter Window Parallelism and Secondary Seal

(5) Adjust lower front track attachment so front of window is aligned with rear edge of front door glass by pushing track adjusting stud fore and aft in support slot. To get secondary seal turn adjusting screw in and out as required. Secure jam nut on adjusting screw.

Front Up Stop

(6) Push front up stop bracket on front track down against slide on lower frame and secure attaching nut.

Rear Up Stop

(7) Push rear up stop bracket on belt reinforcement down against plastic up stop on glass and secure the attaching screws.

Down Stop (Electric)

(8) Lower glass so top edge is even or slightly below quarter panel belt line.

(9) Push down stop bracket on lower front track upward to control lower frame slide and secure attaching screws.

Down Stop (Manual)

(10) Repeat step 8 when required. Position stop on regulator plate against stop on regulator sector and secure locknut.

QUARTER WINDOW INSTALLATION

It is recommended that the procedure shown in (Fig. 9) be followed for quarter window installation.

(1) Apply lubricant to pivot bracket quarter window.

(2) Install regulator (Electric or Manual).

(3) Install lower support.

(4) Assemble front track, adjust studs, center slide and up-stop.

(5) Install front track quarter window.

(6) Assemble slide and up-stop to quarter glass and lower frame assembly.

(7) Install quarter glass and lower frame assembly.

(8) Install rear run.

(9) Install down-stop and bumper to front track (Electric).

(10) Install up-stop.

PIVOT BRACKET QUARTER WINDOW (Fig. 10)

The Pivot Bracket is welded to the inside section of the Quarter Panel. Lubricant should be applied to channel slide contact surfaces using major access hole in quarter inside panel.

DOWN STOP AND BUMPER (Fig. 11)

(Electrical)

(1) Assemble bumper to down stop.

(2) Raise glass to half open position.

(3) Install bumper and down stop assembly thru major access hole in quarter inside panel. Position to front track slots in full down position.

(4) Secure with screw and washer.

MyMopar.com

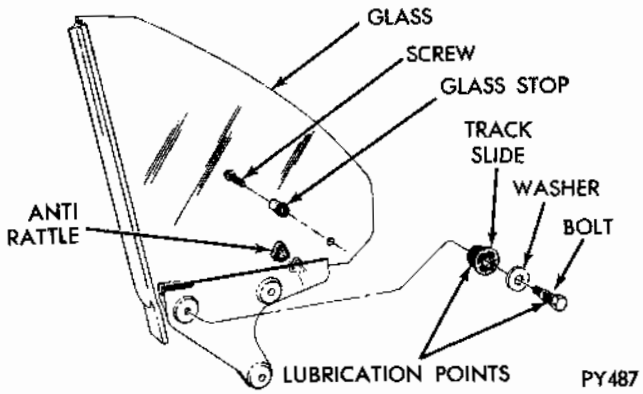

Fig. 12 - Slide and Up-Stops.

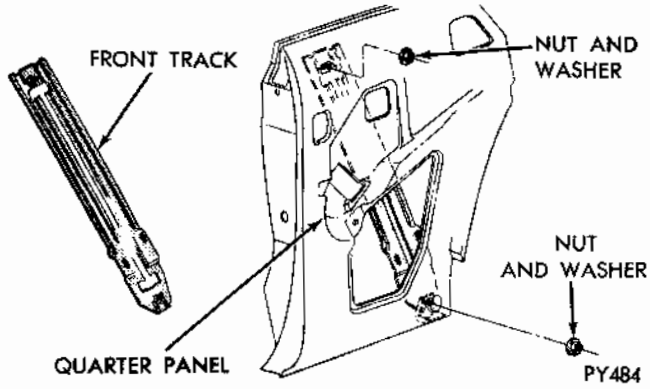

Fig. 13 - Quarter Window Front Track

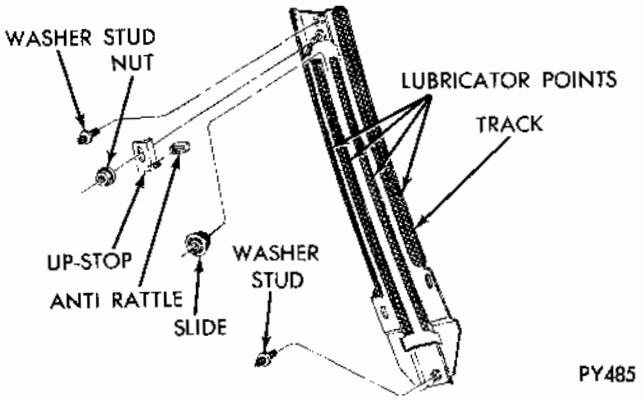

Fig. 14 - Front Track Adjuster

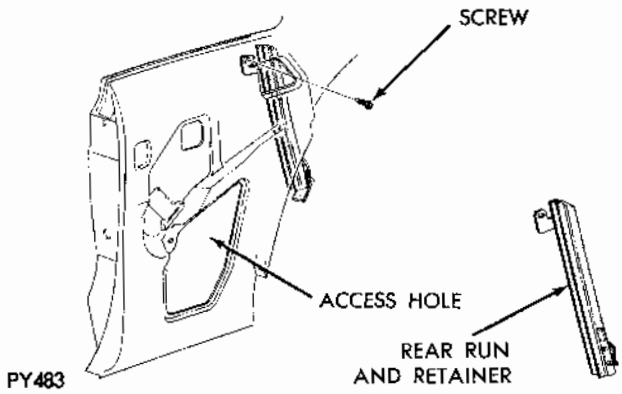

Fig. 15 - Rear Run-Quarter Window

SLIDE AND UP STOP TO QUARTER GLASS (Fig. 12)

(1) Position glass and frame assembly on bench.

(2) Apply lubricant to bolt and slide track.

(3) Assemble lubricated bolt to washer and slide.

(4) Position threaded end of bolt with slide and washer assembly to taped hole in front boss of frame assembly and secure.

(5) Assemble stop, (quarter glass up position) on glass, to hole provided in glass, and secure with screw.

(6) Assemble anti-rattle to quarter window glass stop.

QUARTER WINDOW FRONT TRACK (Fig. 13)

(1) Install front track washer stud thru quarter window glass opening at belt.

(2) Position upper washer stud to elongated hole in quarter inside panel, and lower washer stud to elongated hole in lower support and snug install.

(3) Use nut and washer assembly to install step 2.

FRONT TRACK ADJUSTER (Fig. 14)

(Quarter Panel)

(1) Position track weld nut and stud assembly on bench.

(2) Assemble anti-rattle to up-stop quarter window glass front.

(3) Sub-assemble up-stop and anti-rattle assembly item $2 to track assembly item 1 utilizing upper weld stud to locate up-stop and snug secure in pull up position.

(4) Secure with nut and washer assembly.

(5) Assemble washer stud upper and lower slide track.

(6) Apply lubricant to points shown in (Fig. 14).

(7) Assemble slide to lubricated center tracks and slide to bottom.

QUARTER WINDOW REAR RUN (Fig. 15)

(1) Place glass in full down position.

(2) Install run and retainer assembly thru major access hole in quarter panel.

(3) Snap bottom clip on retainer to up-standing bracket on wheelhouse, position upper end to panel belt reinforcement, align holes and secure with screw.

QUARTER WINDOW REGULATOR (Fig. 16)

(1) Assemble arm to glass lower frame and retainer and quarter window arm to glass lower frame slide.

(2) Place into hole in regulator arm, and press

MyMopar.com

both together to secure.

(3) Install regulator assembly (manual or electric) thru major access hole in quarter inside panel, insert idler arm roller slide in pivot bracket channel, position mounting plate or motor bracket to attaching holes in quarter inside panel and secure with screw and washer.

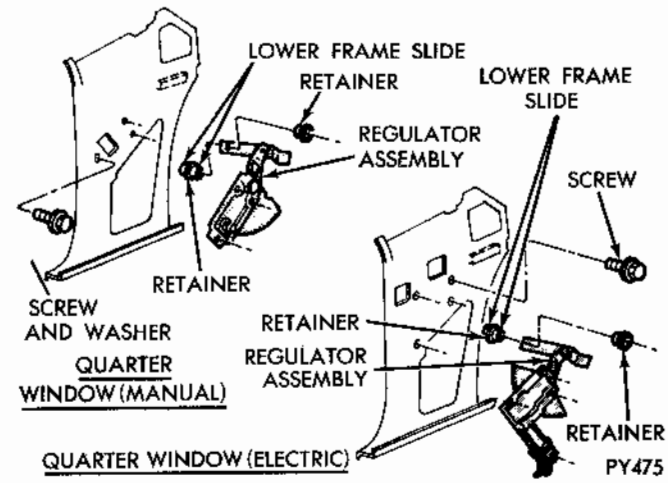

Fig. 16 - Quarter Window Regulator

SIDE GLASS DART

INDEX

	Page
Ventless Glass Installation	33
Ventless Glass Adjustments	33
Fore and Aft	33
Parallelism of Glass to Primary Seal	33
In-Out and Secondary Seal	34
Front and Rear Track Parallelism	34
Sedan Models	34
Adjustments-Vent Wing	34
Door Glass Adjustments	35
Vent Wing Replacement	35
Removal	35
Installation	35
Door Glass Replacement	35
Removal	35
Installation	35
Regulator Replacement	35
Rear Doors	35
Adjustments	35
Glass Replacement	36
Removal	36
Installation	36
Regulator Replacement	36
Removal	36
Rear Door Stationary Glass	36
Removal	36
Installation	36
Hardtop Quarter Glass	37
Adjustments	37
Glass Replacement	37
Removal	37
Installation	37

GLASS

Ventless Glass Installation

(1) Install down stops (Fig. 1).
(2) Place ivot bracket on regulator.
(3) Install sector assembly and arms to door.
(4) Assemble gaskets to lift bracket stabilizer mounting plate.
(5) Assemble spacers and stabilizer to glass.
(6) Install front track.
(7) Install lift bracket.
(8) Install up-stops front and rear.
(9) Install rear track.
(10) Install glass and lower to bottom of door.
(11) Install stud plate stabilizers to glass.
(12) Install adjuster-front track.
(13) Install up-stops to front and rear of glass.
(14) Install inner panel brace to door sill.
(15) Install door panel trim.

VENTLESS GLASS ADJUSTMENTS

Adjustments-Ventless Door

Fore and Aft

(1) Raise glass completely (Fig. 2).
(2) Move glass fore or aft to set glass to belt line weatherstrip.
(3) Tighten glass track upper bracket at belt line.

Parallelism of Glass to Primary Seal

(4) Move pivot bracket fore or aft and set glass parallel to weatherstrip locating bead at primary sealing lip.

MyMopar.com

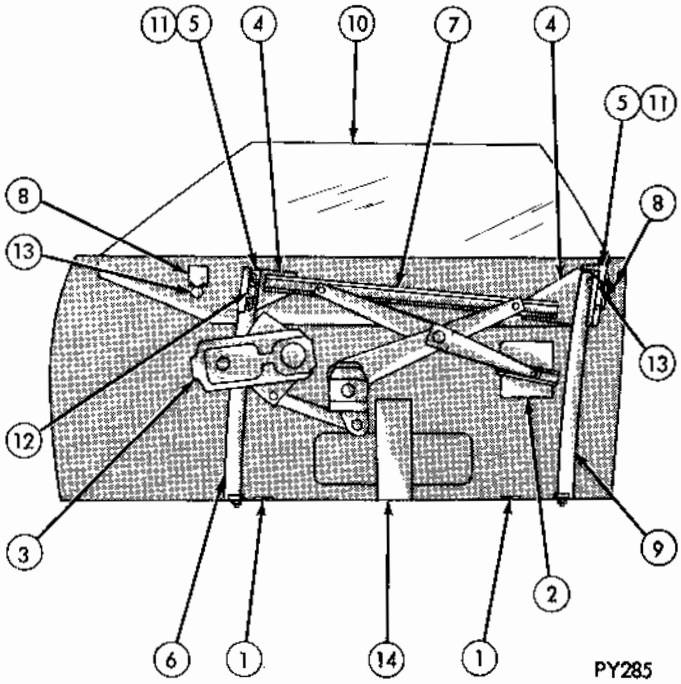

Fig. 1 - Ventless Glass Installation

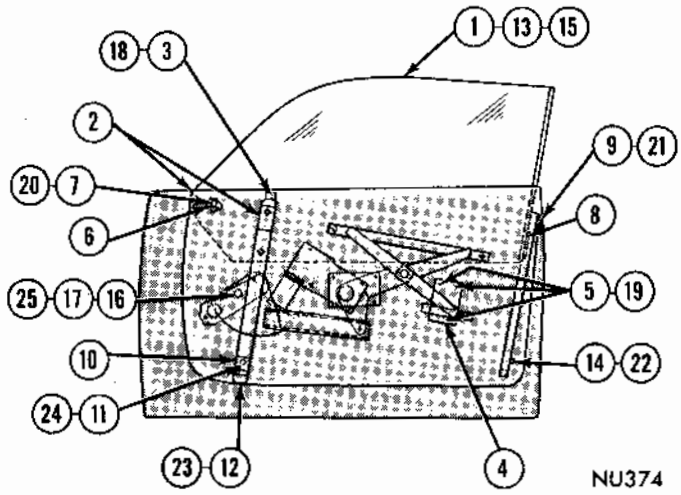

Fig. 2 - Ventless Glass Adjustments

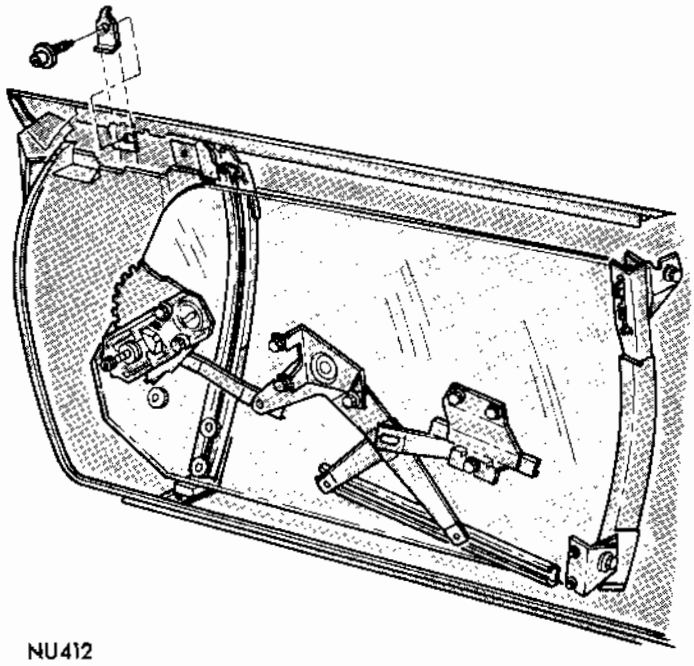

Fig. 3 - Glass Up-Stops

(5) Tighten pivot bracket and support screw assemblies.

(6) Set front up-stop down against bumper on glass.

(7) Tighten up-stop bracket screw on inner panel (Fig. 3).

(8) Set rear channel up-stop wedge down against stop in rear frame.

(9) Tighten rear channel and bracket upper attachment screw.

In-Out and Secondary Seal

(10) Move bottom of front track to create an effective glass to weatherstrip secondary seal.

(11) Tighten glass track to lower bracket screw.

(12) Tighten track lower bracket and retainer to inner panel nut assembly.

Front and Rear Track Parallelism

(13) Run glass approximately 2/3 way down.

(14) Tighten glass run rear channel and bracket assembly lower bracket nut assembly.

Down Stop-Manual

(15) Lower glass until top edges of glass is even with or slightly below belt line of door outer panel.

Do not allow glass to drop below weatherstrip on door outer panel.

(16) Position stop on regulator plate against stop on sector.

(17) Tighten regulator plate stop locknut. Tighten callouts 18 through 25 securely.

GLASS

Sedan Models

Adjustments—Vent Wing

Fore-or-aft adjustment (Fig. 4) of the upper end is accomplished by moving vent wing up or down. The assembly moves forward and downward to relieve a binding condition of the door glass and rearward and upward to remove looseness.

Loosen vent wing to door face screws and adjusting screws at lower end of division channel. With glass raised, move entire vent wing assembly up or down until glass is free in channel, **not loose,** and tighten screws. Insert a narrow blade screwdriver through opening in weatherseal, just ahead of lower pivot, to turn adjusting screws.

MyMopar.com

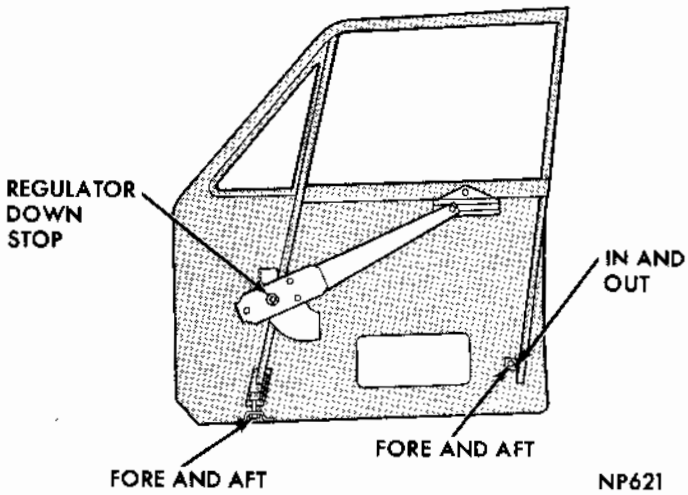

Fig. 4 - Front Door Glass Adjustment (Sedan)

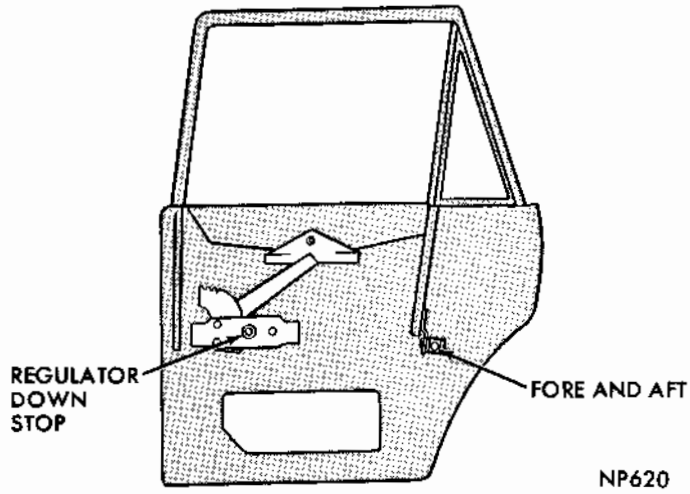

Fig. 5 - Rear Door Glass Adjustment-Sedan

DOOR GLASS

Adjustments

Lower glass and move division channel rearward to remove excessive looseness of glass without creating a binding condition. Tighten adjusting screws at lower end of channel (Fig. 4).

It may be necessary to readjust the lower end of channel, to gain alignment of the channel and rear glass run.

If necessary, adjust lower end of rear run channel in or out. Adjust down-stop so top edge of glass is flush with top edge of glass opening in door.

VENT WING REPLACEMENT

Removal

(1) Remove nut and washer from lower vent frame stud.

(2) Remove vent frame to door screws.

(3) With glass in down position, disengage lower frame stud from door bracket, window regulator arms from lift bracket and slide glass out of run channels.

(4) Disconnect outer belt weatherstrip for a short distance to provide clearance for the division channel.

(5) Tilt top of vent frame toward rear of door and up out of door.

Installation

(1) Place vent assembly into door.

(2) Move vent frame forward into position.

(3) Install attaching screws. **Do not tighten.**

(4) Position door glass in run channel and install regulator arms and clips.

(5) Position lower run channel adjusting stud into door bracket.

(6) Align window run channel.

DOOR GLASS REPLACEMENT

Removal

(1) Loosen front run channel lower mounting screw (Fig. 4).

(2) Move run channel forward and slide glass out of channel.

(3) Remove regulator arm from lift bracket channel.

(4) Remove glass from door.

(5) Push plug out of lift bracket rivet.

(6) Pinch expandable ends of rivet together and push rivet out of glass.

Installation

(1) Position lift bracket and gasket on glass and install rivet and plug.

Before installing glass, lubricate regulator slide channel.

(2) Position glass into door.

(3) Position regulator arm roller into lift bracket.

(4) Position glass into glass run channels and adjust door glass.

Regulator Replacement

The regulator assemblies are attached to the door inner panels by screw and washer assemblies. When removing a regulator, the door glass should be fully lowered. Slide regulator rearward to disengage from lift bracket and guide assembly. Lubricate tooth area of regulator when reinstalling.

REAR DOORS

Adjustments

The front glass run is fixed. The division channel can be adjusted fore or aft, as well as in or out (Fig. 5).

MyMopar.com

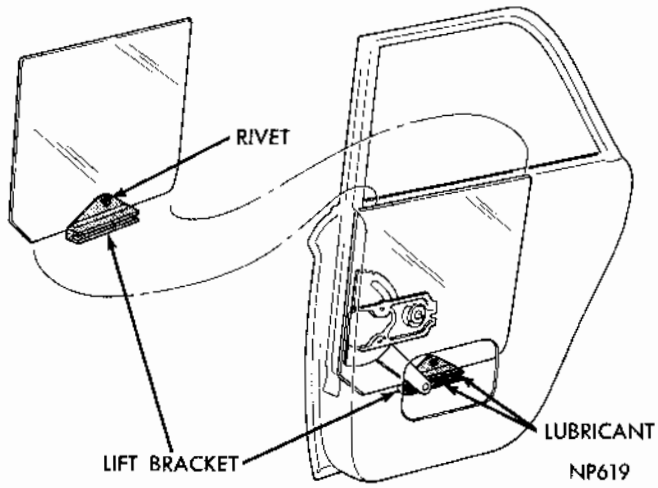

Fig. 6 - Rear Door Glass Replacement-Sedan

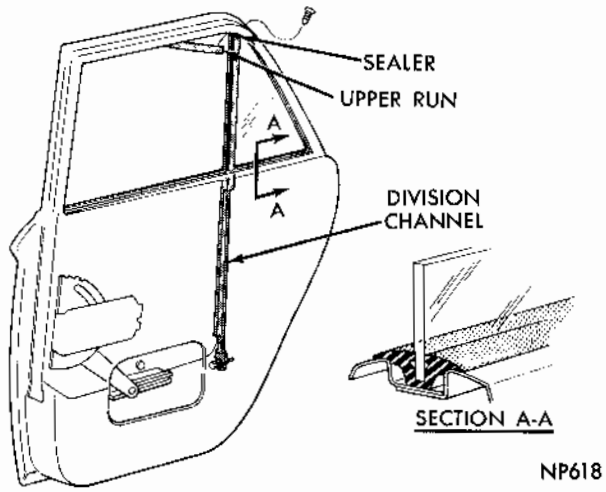

Fig. 7 - Rear Door Stationary Glass-Sedan

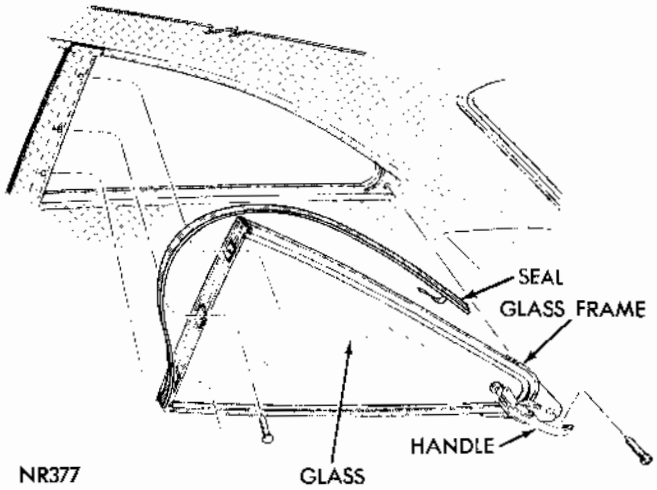

Fig. 8 - Quarter Window Vent Glass

If adjustment of the division channel is necessary, loosen the upper channel attaching screw. Generally, sufficient movement of the channel is possible at this point to correct any binding or looseness of the glass.

If additional channel movement is required, lower the glass and loosen the two attachment screws at lower end of channel. If additional in-or-out movement is required to obtain proper alignment of the glass, adjust the in-or-out adjusting screw at the lower end of the division channel.

GLASS REPLACEMENT

Removal

(1) Loosen window track adjusting nuts (Fig. 6) and remove glass from run channels.

(2) Remove regulator arm from lift bracket channel.

(3) Remove glass from door.

(4) Remove lift bracket from glass.

Installation

Before installing glass, lubricate all moving parts of regulator with lubriplate.

(1) Install lift bracket on glass.

(2) Position glass into door opening.

(3) Install regulator arm roller into channel of glass lift bracket.

(4) Position glass into run channels and adjust glass.

REGULATOR REPLACEMENT

Removal

Service procedures for the regulator are the same as for front doors.

REAR DOOR STATIONARY GLASS

Removal

(1) Remove division channel attaching screws at upper and lower ends (Fig. 7) and remove channel.

(2) Move the glass and weatherstrip assembly forward and out of window opening.

(3) Inspect the weatherstrip.

Installation

(1) Position glass and weatherstrip assembly to window opening and move rearward into upper frame.

(2) Insert division channel run into channel.

(3) Apply a 1-1/2 inch length of sealer to joint area of division channel.

(4) With front glass in down position, insert division channel into door and move firmly against stationary glass weatherstrip.

(5) Install upper and lower attaching screws but **do not tighten.**

(6) Adjust the door glass.

MyMopar.com

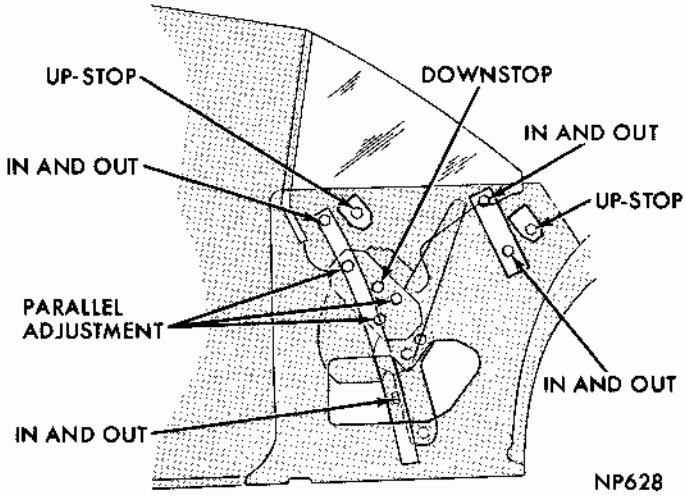

Fig. 9 - Quarter Window Adjustments-Hardtop

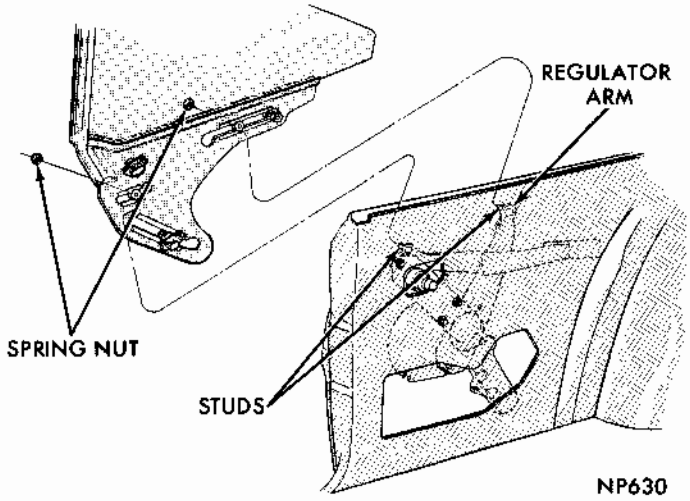

Fig. 10 - Quarter Glass Replacement-Hardtop

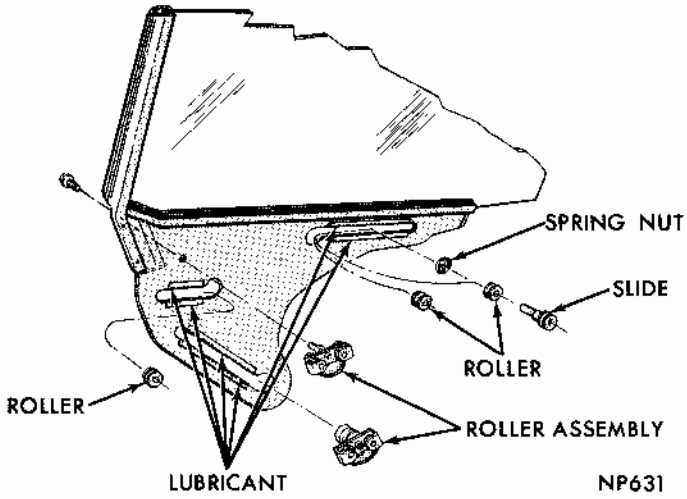

Fig. 11 - Quarter Glass Assembly-Hardtop

SEDAN MODELS

Two door sedan models are equipped with a vent wing type quarter window (Fig. 8). Elongated holes in the hinge allow correct positioning of the glass assembly to the opening. The release handle assembly is attached to the glass with a grommet, washer, retainer and screw.

HARDTOP MODELS

Adjustments

(1) Raise quarter window 2 inches above belt line.

(2) Adjust top of front and rear tracks (Fig. 9) until glass just touches the outer belt weatherstrip and tighten nuts.

(3) Raise window to the upper weatherstrip and adjust regulator so glass at front contacts weatherstrip and is parallel to the weatherstrip bead. Tighten regulator screws.

(4) Adjust bottom of front and rear tracks until upper edge of glass seals against roof weatherstrip. Tighten nut on rear track only.

(5) Tighten adjusting screw on bottom of front track to lower brace.

(6) Position front and rear up-stops to glass lower frame stops and tighten screws.

(7) Adjust regulator down stop (Fig. 9) so glass contacts outer weatherstrip lightly for full length.

GLASS REPLACEMENT

Removal

(1) With glass in mid-position, remove spring nuts from regulator arm studs (Fig. 10) and studs from rollers.

(2) Remove up-stops from lower frame.

(3) Remove glass assembly from door.

(4) Remove slide and roller from glass frame rear track and roller assemblies from tracks in front section (Fig. 11).

Installation

(1) Position roller assemblies and slide to front and rear tracks of glass lower frame.

(2) Insert glass assembly into quarter panel, spring regulator arms inboard and insert studs in rollers and install spring nuts.

(3) Install up-stops and adjust quarter window.

MyMopar.com

STATIONARY GLASS

INDEX

	Page
CONVERTIBLE	3
Installation	4
Removal	3
REAR WINDOW (WEATHERSTRIP TYPE)	4
Installation	4
Removal	4
STATION WAGON GLASS (NON CEMENTED IN TYPE)	4
Installation	5
Removal	4
STATION WAGON QUARTER GLASS (CEMENTED IN TYPE)	4
Installation	5
Removal	4
WINDSHIELD (NON CEMENTED IN TYPE)	2
Installation	3
Removal	2
WINDSHIELD AND REAR WINDOW (CEMENTED IN TYPE)	1
Installation	1
Removal	1

SERVICE PROCEDURES

WINDSHIELD AND REAR WINDOW

(Cemented In Type)

The windshield and rear window are polysulfide adhesive sealed (cemented-in) types. Service procedures for the two glass are comparable.

Short cut sealing methods should not be used. To ensure a permanent watertight glass installation, use only the recommended adhesive sealer kit or its equivalent.

Removal

(1) Place protective coverings over the areas adjacent to the glass being replaced.

(2) Remove window exterior mouldings using Tool C-4009A and inner garnish mouldings.

(3) Secure one end of a two foot length of tempered steel wire (.028 gauge max.) to a wooden handle.

(4) Insert other end of wire through adhesive at lower corner of window and secure to another wooden handle.

(5) With an assistant, carefully cut through adhesive material by pulling wire, in a sawing motion, up one side, across top, down opposite side and across bottom (Fig. 1).

(6) With an assistant, remove glass from opening and if original glass is to be reinstalled, place on a protected surface.

(7) All old adhesive should be removed from glass and opening reveal using a putty knife or razor blade. **DO NOT use an oil base solvent to remove adhesive.**

(8) Using steel wool, remove loose flakes of adhesive and old primer from reveal. Use light air pressure to clean reveal and surrounding areas.

Installation

(1) Inspect moulding retaining clips. Remove and straighten clips bent more than 1/32 inch away from the body panel. Use self-sealing screw-on

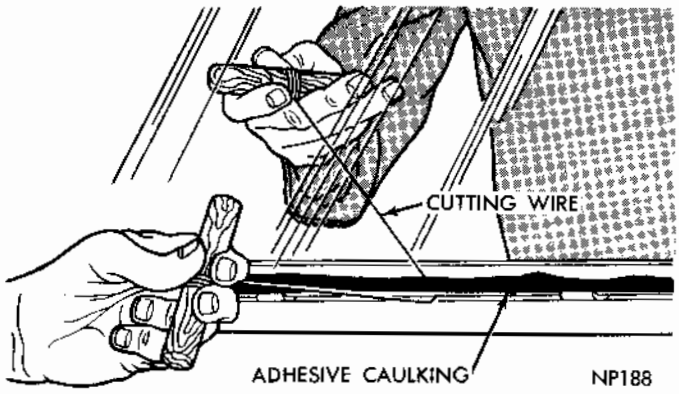

Fig. 1 Cutting Adhesive Caulking

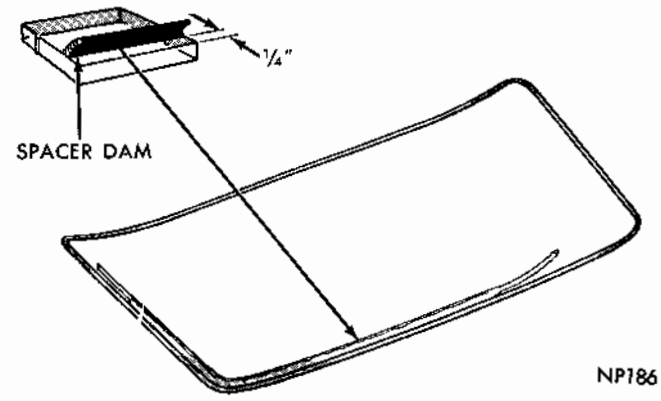

Fig. 2 Spacer Dam Installation

MyMopar.com

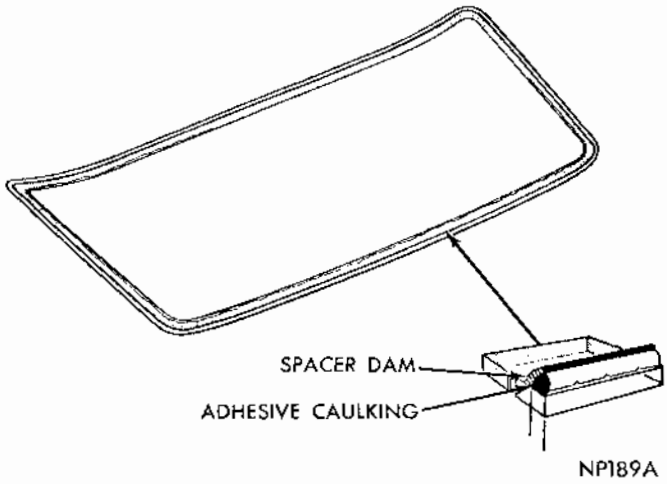

Fig. 3 Adhesive Application to Glass

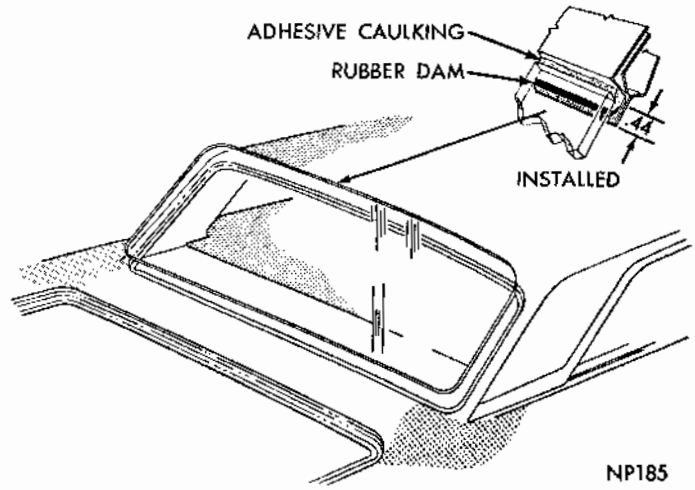

Fig. 4 Window Installation

type clips when necessary to replace. All clips must be attached tightly.

(2) Inspect rubber spacers in window reveals when replacement of spacers is required, make certain they are positioned in the exact areas removed from.

(3) Install spacer dam 1/4 inch from edge and positioned so it leans toward edge on glass inner suface (Fig. 2).

(4) Attach suction cups to glass outer surface and position glass in opening.

(5) Inspect relationship of glass to fence completely around opening. The spacer dam should fold under and create a cushion for the glass to rest on. The glass to body fence overlap (0.30 inch minimum) should be equal across the top and sides. Use waterproof shims under spacers to obtain required overlap.

(6) Apply a piece of masking tape over each side of glass and roof extensions. Slit tape vertically at edge of glass so when glass is installed, tape on glass can be aligned with tape on body.

(7) Remove glass from opening and place on a protected surface, with inside surface up.

(8) **Primer solution will damage any paint or trim it comes in contact with.** Using a cheesecloth pad saturated with adhesive primer, thoroughly apply to rear window fence and reveal areas.

(9) **The adhesive begins to cure immediately upon exposure to air. The working life is limited to approximately 15 minutes. Perform the following steps as quickly as possible.**

(10) Insert adhesive tube into a standard household caulking gun, install nozzle on end of tube, and puncture adhesive seal at nozzle.

(11) Apply a smooth continuous 3/8 inch bead of adhesive on glass between glass edge and spacer dam (Fig. 3).

(12) When positioning glass in opening, alignment must be exact to prevent necessity of moving glass after adhesive contacts fence.

(13) With an assistant and using suction cups on glass **align tape on glass with tape on body, make certain glass will set on rubber spacers and install glass in opening (Fig. 4).**

(14) Press glass **lightly** to adhere adhesive to fence flange.

(15) Run a flat wooden or fiber tool around entire edge of glass to force adhesive into opening between edge of glass and reveal.

(16) Clean interior surface of glass. **Hand pressure to clean the glass interior suface after installing glass and before adhesive has set up may result in glass being pushed out of opening.**

(17) **Close car doors gently, do not slam** and water test window. Use a cold water spray, **do not run a heavy stream of water directly on freshly applied adhesive.** If leaks are evident, work applied adhesive into leak point. Additional material can be applied and worked into leak point.

(18) Install garnish and exterior mouldings, clean glass exterior surface and remove protective covers.

(19) **Leave a window open and do not slam any doors for at least one hour. Sufficient pressure could build up in a closed car to force the window out of the opening.**

WINDSHIELD

(Non-Cemented Type)

Removal

(1) Cover cowl, hood and fender area with a protective covering.

(2) Remove windshield garnish mouldings.

(3) Remove windshield outer mouldings using Tool C-4009A

MyMopar.com

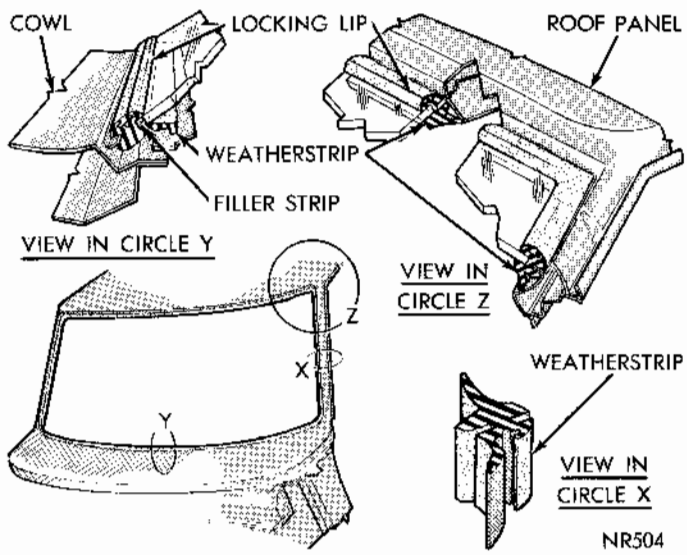

Fig. 1 Windshield Weatherstrip

(4) Unlock weatherstrip (Figs. 1) by prying lip of weatherstrip apart, inserting a fibre wedge, and with a slight twist to wedge, unlock weatherstrip by moving tool around weatherstrip.

(5) Carefully loosen weatherstrip from glass inner and outer sides.

(6) With an assistant supporting one end of windshield, exert pressure, from inside car, to force windshield out of weatherstrip and carefully remove from opening.

(7) Whenever a glass has cracked from pressure at the fence area, remove weatherstrip and correct cause of crack. The fence should be straight, smooth, without burrs or high spots.

(8) Inspect weatherstrip for damage.

Installation

(1) Remove all old sealer and cement from original weatherstrip.

(2) Apply sealer in fence and glass groove portions of weatherstrip.

(3) Apply a 3/8 inch bead of sealer completely across cowl top panel lower windshield frame area (Fig. 2).

(4) Position weatherstrip lower section to tab area, starting at corners install over tabs and work toward center.

(5) Install weatherstrip on fence at sides and upper opening. With hand pressure, seat weatherstrip fully on fence.

(6) With an assistant, slide upper edge of glass into channel of weatherstrip. Use a fibre tool to force weatherstrip lip over glass.

(7) Seat glass in weatherstrip, pounding glass with palm of hand using an upward motion.

(8) Insert a fibre tool between weatherstrip and glass, at either corner, slide tool across top, completely around weatherstrip to seat glass in place.

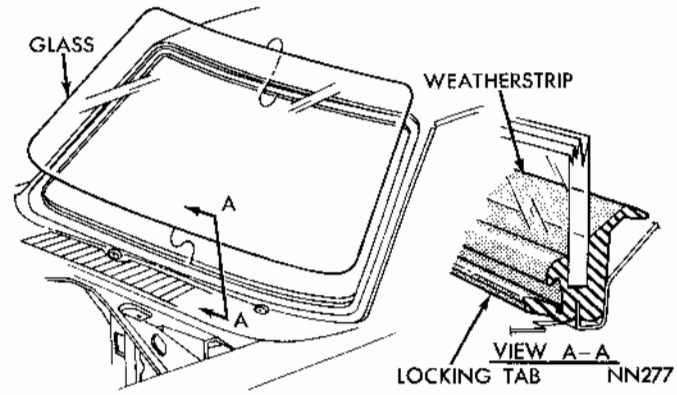

Fig. 2 Windshield Installation

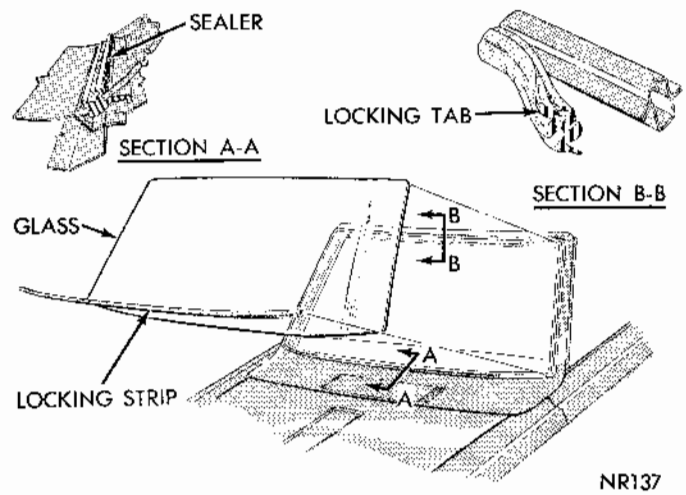

Fig. 1 Windshield Installation-Convertible

(9) Using a fibre tool and working across top, down sides and over bottom, force weatherstrip locking tab into locked position.

(10) Water test windshield area.

(11) Install exterior mouldings, wiper arms and blades.

(12) Install garnish mouldings and remove protective covering.

Convertible Models

Removal

(1) Cover cowl, hood and fender area with a protective covering.

(2) Release top locking mechanisms and push header from windshield frame to expose moulding retainer screws.

(3) Remove wiper arms and blades.

(4) Remove windshield outside mouldings.

(5) Remove inner "A" post side mouldings.

(6) Remove sun visors and screws attaching header trim cap to header.

(7) Pry header moulding up slightly to clear moulding from weatherstrip, disengage from header and remove.

MyMopar.com

(8) Remove windshield in same method as other models.

Installation

(1) Install windshield (Fig. 1) in same manner as described for other models.

REAR WINDOW

WEATHERSTRIP TYPE REPLACEMENT

(Non Cemented in Type)

Removal

(1) Place a protective covering over deck lid, quarter panel and rear window areas. Remove rear window mouldings using Tool C-4009A.

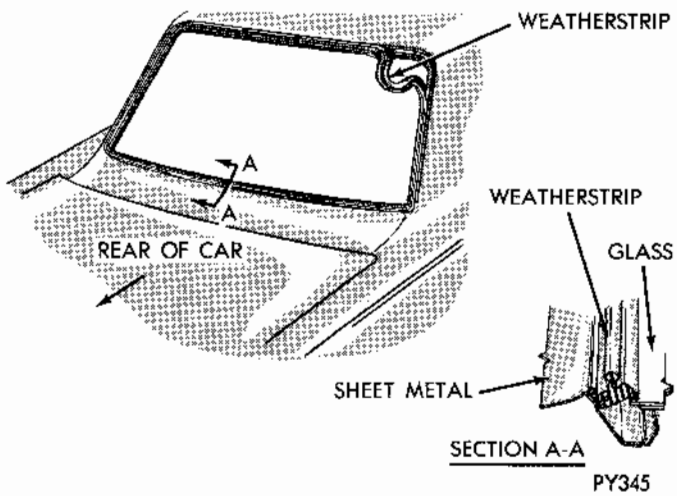

Fig. 1 Weatherstrip

(2) Using a fiber wedge, unlock weatherstrip by prying weatherstrip apart and with a slight twist move wedge around weatherstrip.

(3) With an assistant supporting glass on outside, from inside car, push against glass at one of the upper corners and remove glass from weatherstrip.

(4) Place glass on a cloth covered bench.

(5) Remove weatherstrip from fence (Fig. 1)

Installation

(1) Inspect weatherstrip fence to be certain it is clean, smooth and straight.

(2) Flow a continuous ribbon of sealer on each lip and around entire length fo weatherstrip glass groove.

(3) Install weatherstrip making sure it is fully seated on fence.

(4) With an assistant, position rear window in weatherstrip.

(5) With palm of hand, tap window glass to make certain it is fully seated.

(6) Insert a fiber tool and working around weatherstrip, force locking tab into locked position.

(7) Water test rear window area.

(8) Install window mouldings, clean glass and remove protective covering.

STATION WAGON QUARTER GLASS (CEMENTED IN TYPE)

REPLACEMENT

Removal

(1) Place protective coverings over the areas adjacent to the glass being replaced.

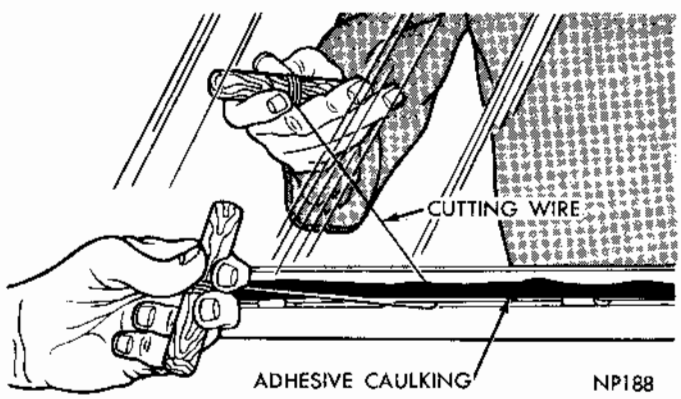

Fig. 1 Cutting Adhesive Caulking

(2) Remove window exterior mouldings using Tool C-4009A and inner garnish mouldings.

(3) Secure one end of a two foot length of tempered steel wire (.028 gauge max.) to a wooden handle.

(4) Remove quarter window lower weatherstrip.

(5) Insert other end of wire through adhesive at corner of window and secure to another wooden handle.

(6) With an assistant, carefully cut through adhesive across material by pulling wire, in a sawing motion, up one side, across top, down opposite side and across bottom (Fig. 1).

(7) With an assistant, remove glass from opening and if original glass is to be reinstalled, place on a protected surface.

(8) All old adhesive should be removed from glass and opening reveal using a putty knife or razor blade. **DO NOT use an oil base solvent to remove adhesive.**

(9) Using steel wool, remove loose flakes of ad-

MyMopar.com

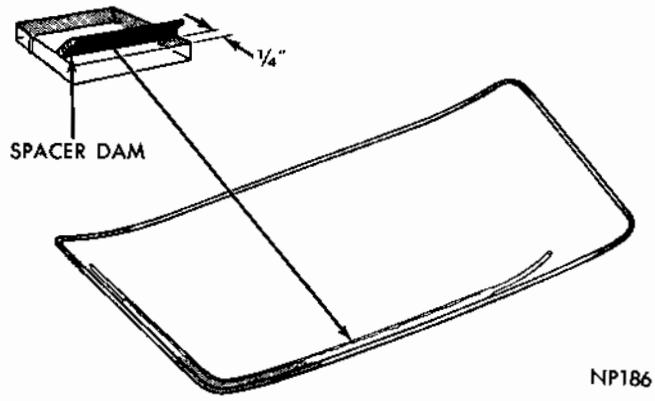

Fig. 2 Spacer Dam Installation

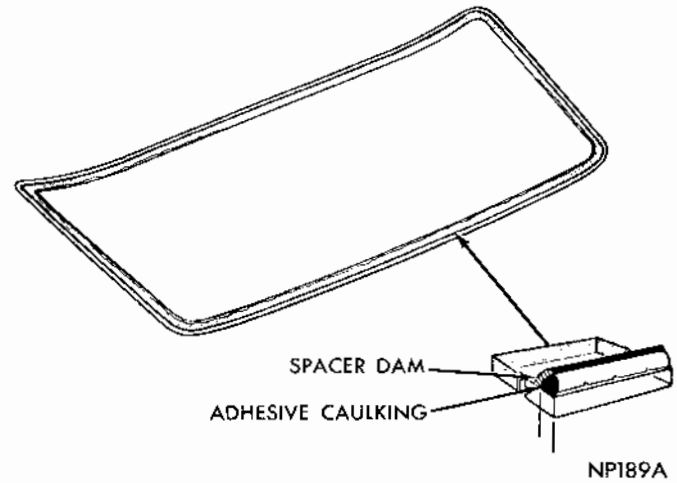

Fig. 3 Adhesive Application To Glass

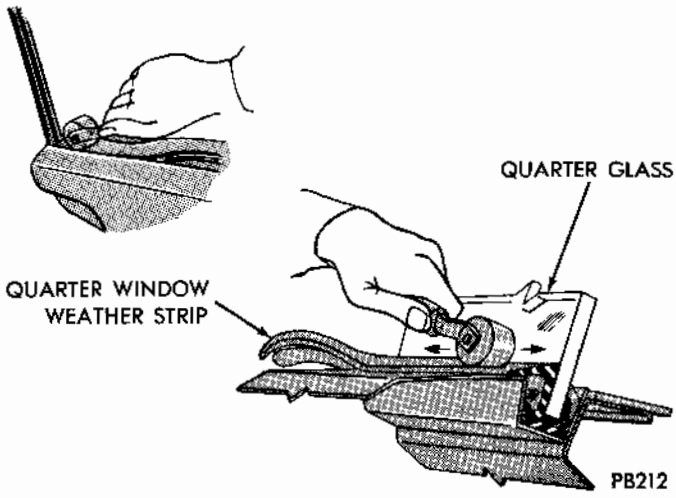

Fig. 4 Installing Quarter Window Weatherstrip.

hesive and old primer from reveal. Use light air pressure to clean reveal and surrounding areas.

(10) Remove old sealer from lower trough after marking location of spacers.

Installation

(1) Inspect moulding retaining clips. Remove and straighten clips bent more than 1/32 inch away from the body panel. Use self-sealing screw-on type clips when necessary to replace. All clips must be attached tightly.

(2) Inspect rubber spacers in lower trough when replacement of spacers is required, make certain they are positioned in the areas removed from.

(3) Install spacer dam 1/4 inch from edge and positioned so it leans toward edge on glass inner surface (Fig. 2).

(4) Attach suction cups to glass outer surface and position glass in opening.

(5) Inspect relationship of glass to fence completely around opening. The spacer dam should fold under and create a cushion for the glass to rest on. The glass to body fence overlap (0.30 inch minimum) should be equal across the top and sides. Use waterproof shims under spacers to obtain required overlap.

(6) Apply a piece of masking tape over each side of glass and roof extensions. Slit tape vertically at edge of glass so when glass is installed, tape on glass can be aligned with tape on body.

(7) Remove glass from opening and place on a protected surface, with inside surface up.

(8) **Primer solution will damage any paint or trim it comes in contact with.** Using a cheesecloth pad saturated with adhesive primer, thoroughly apply to rear window fence and reveal areas.

(9) **The adhesive begins to cure immediately upon exposure to air. The working life is limited to approximately 15 minutes. Perform the following steps as quickly as possible.**

(10) Insert adhesive tube into a standard household caulking gun, install nozzle on end of tube, and puncture adhesive seal at nozzle.

(11) Apply a smooth continuous 3/8 inch bead of adhesive on glass between glass edge and spacer dam (Fig. 3).

(12) When positioning glass in opening, alignment must be exact to prevent necessity of moving glass after adhesive contacts fence.

(13) With an assistant and using suction cups on glass, **align tape on glass with tape on body, make certain glass will set on rubber spacers and install glass in opening.**

(14) Press glass **lightly** to adhere adhesive to fence flange.

(15) Run a flat wooden or fiber tool around entire edge of glass to force adhesive into opening between edge of glass and reveal.

(16) Install quarter window lower weatherstrip (Fig. 4) using a small plastic roller or fiber stick.

(17) Clean interior surface of glass. **Hand pressure to clean the glass interior surface after installing glass and before adhesive has set up may result in glass being pushed out of opening.**

MyMopar.com

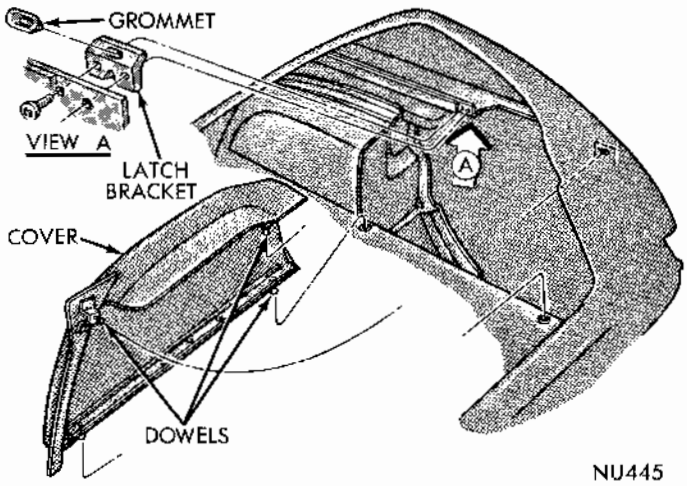

Fig. 1 Spare Tire Cover

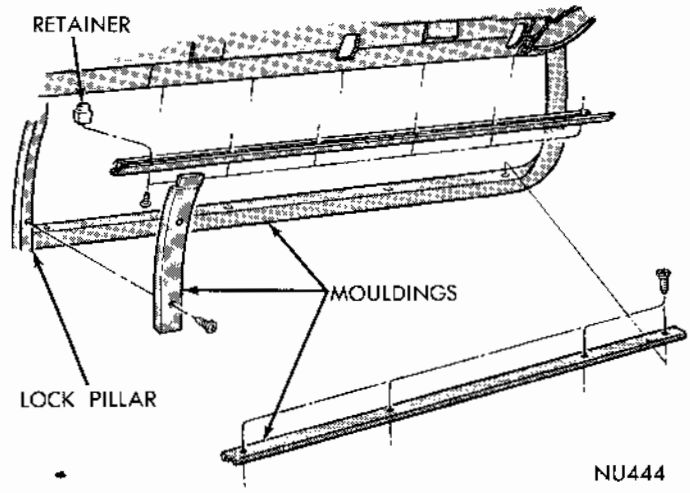

Fig. 2 Quarter Window Garnish Mouldings

(18) **Close car doors gently, do not slam** and water test window. Use a cold water spray, **do not run a heavy stream of water directly on freshly applied adhesive.** If leaks are evident, work applied adhesive into leak point. Additional material can be applied and worked into leak point.

(19) Install mouldings, clean glass exterior surface and remove protective covers.

STATION WAGON

GLASS REPLACEMENT (NON-CEMENTED)

Removal

(1) Remove spare tire cover assembly (Fig. 1).

(2) Remove garnish mouldings at quarter window (Fig. 2).

(3) Unlock weatherstrip by inserting a fiber stick

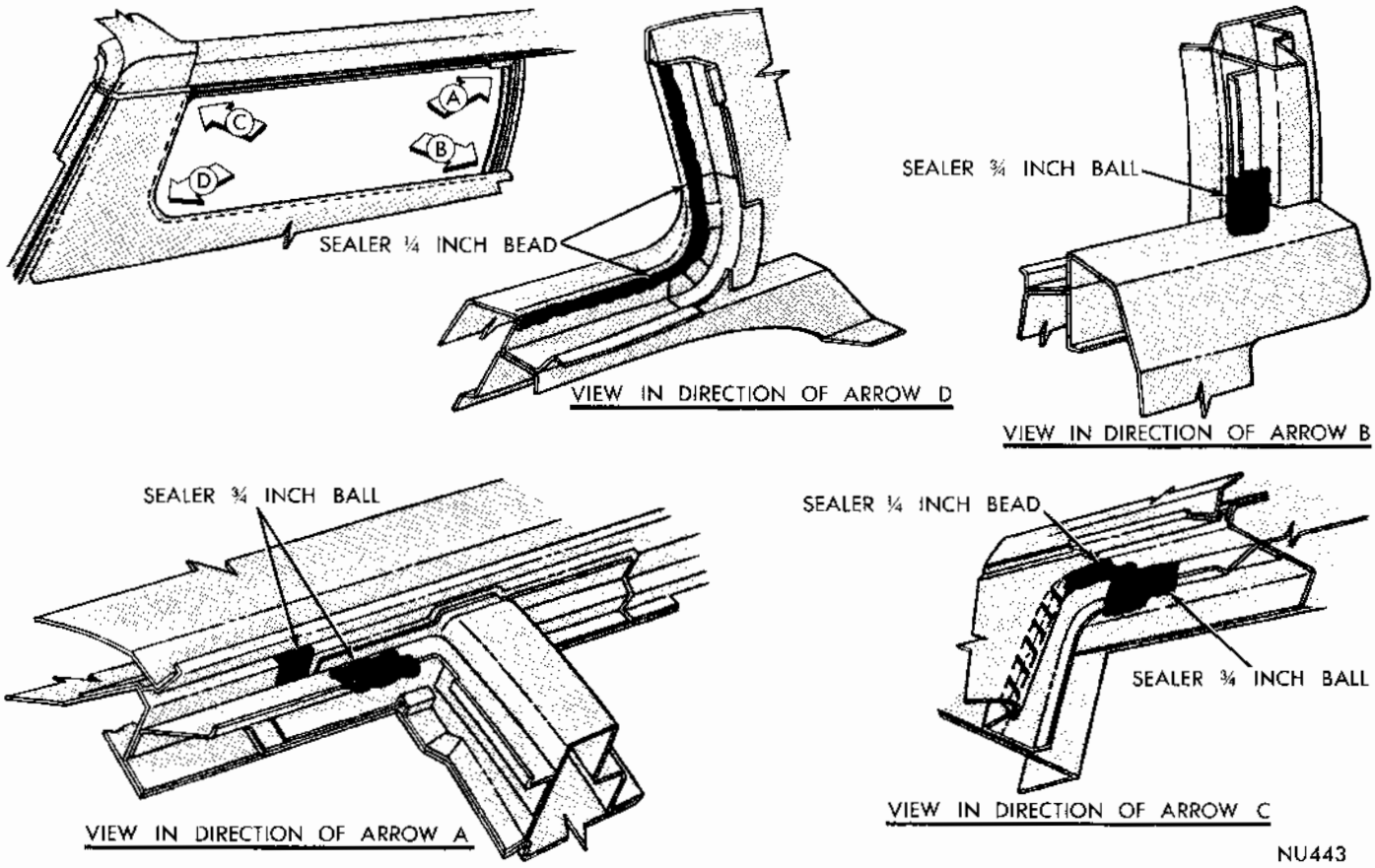

Fig 3 Quarter Window Sealing Areas

MyMopar.com

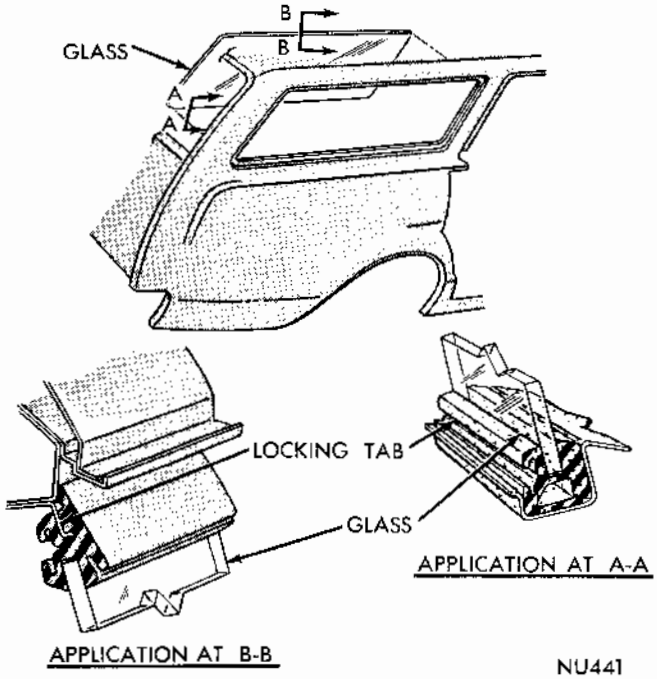

Fig. 5 Glass Replacement

into locking groove of weatherstrip and forcing locking tab out of groove.

(4) Remove glass from weatherstrip from inside of vehicle and weatherstrip from fence.

Installation

(1) Inspect sealing areas of quarter window to ascertain sealer is applied at areas indicated in Figure 3.

(2) Apply a bead of sealer, starting at front and top sections of weatherstrip (Fig. 4).

(3) Apply a small bead of cement to each lip of glass groove, completely around weatherstrip.

(4) Position weatherstrip on fence with locking edges facing inboard.

(5) From inside of vehicle, insert bottom of glass into weatherstrip and using a fiber stick, pull lip of weatherstrip over glass (Fig. 4).

(6) Seat glass in weatherstrip using hand pressure.

(7) Apply rubber lubricant to weatherstrip locking tab and insert locking tab into weatherstrip groove using a fiber stick.

(8) Apply and press secure, sealer to joint of weatherstrip, body lock upper pillar and roof side rail outer front area (Fig. 5).

(9) Apply and press secure, sealer to joint of glass weatherstrip, outer panel weatherstrip retainer and rear body lock pillar.

(10) Install garnish mouldings and spare tire cover.

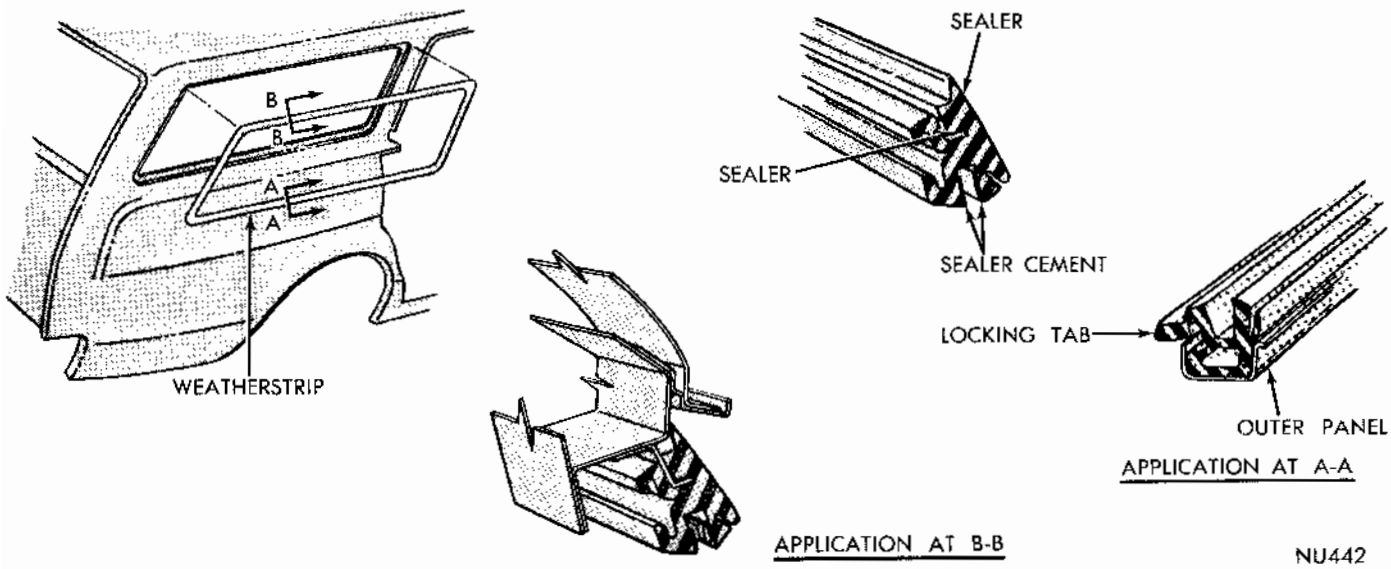

Fig. 4 Weatherstrip Replacement

MyMopar.com

CONVERTIBLE

INDEX

	Page
ADJUSTMENTS	
Cam	4
Control Link	4
Door And Glass Alignment	3
Header	4
Hinge Front	4
Latching Mechanism	3
Major	3
Minor	3
Roof Side Rail Alignment	3
Shifting Top	5
Stack Height	5
COVER TO BELT BAR	9
CYLINDER HOSE ROUTING	2
DOWEL BRACKET	3
ELECTRICAL TESTS	5
FOLDING MECHANISM	1
FOLDING TOP AND WELL COVER	7
OPERATING THE TOP	1
RESERVOIR	1
SIDE TENSION CABLE	5
TOP DECK TO NUMBER 3 BOW	9
WEATHERSTRIPS	
Header	7
Roof Side Rails	7
Seals And Sealers	7
WELL LINER	5
WEB STRAPS	5
MANUAL TOP	4

SERVICE DIAGNOSIS

Condition	Possible Cause	Correction
TOP AND WINDSHIELD HEADERS NOT MEETING AT CORRECT ANGLE	(a) Incorrect side rail adjustment.	(a) With top header locked in position, adjust front hinge.
IMPROPER MEETING (fore and aft) OF TOP AND WINDSHIELD HEADERS	(a) Improper power adjustment.	(a) Adjust power link bracket in direction of movement desired.
TOP HEADER NOT ALIGNED WITH GUIDE DOWELS	(a) Improper header adjustment.	(a) Adjust header "fore or aft" to align with guide dowels.
LEAKAGE AT WINDSHIELD HEADER	(a) Header latch not properly adjusted.	(a) Adjust by turning hook in or out.

SERVICE PROCEDURES

OPERATING THE TOP

Raise or lower top only when vehicle is standing still.

TO LOWER TOP

Release safety catch, pull handle down and push top free of the header.

Be sure the well compartment is free of articles. Operate engine in neutral slightly above idle and hold switch control to the **Down** position until top is fully lowered.

TO RAISE TOP

Remove boot, operate engine in neutral slightly above idle and hold switch control in the **Up** position. As dowels seat in their sockets, pull header down firmly and push locking handles forward until catches engage.

RESERVOIR

DO NOT add fluid to a reservoir until it is installed in its normal position in the vehicle. Adding fluid to the reservoir in a position other than its normal installed position does not allow for fluid expansion and damage to the reservoir may result.

Measure fluid level only when top is lowered. After filling reservoir, raise and lower top several times to expel air that may be trapped in system.

Insufficient fluid in the system may cause slow raising or noise in the pump and motor. Measure fluid level and if low, look for a leak due to a broken line or a loose connection. Fill reservoir (use only AQ-ATF Suffix "A" "Dexron" type transmission fluid) or equivalent until fluid runs out of filler hole.

FOLDING TOP MECHANISM

The electric-hydraulic top folding mechanisms (Fig. 1) consists of two cylinders a pumping system, an electric motor, a pump and reservoir assembly, and a double-throw rotary switch. The wiring and motor are protected by a separate external circuit breaker.

MyMopar.com

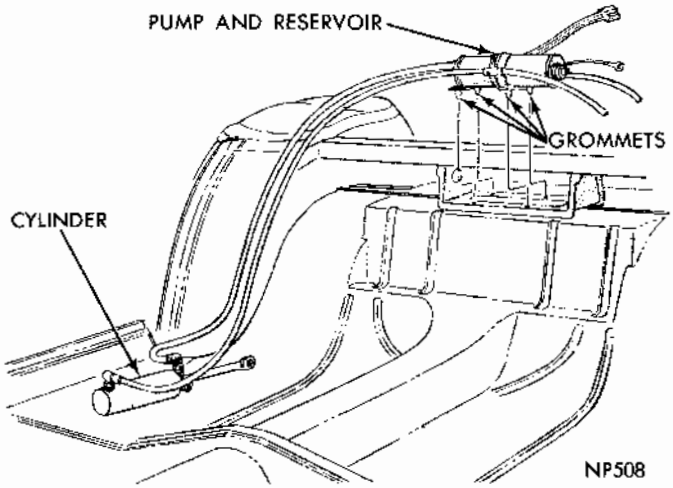

Fig. 1 Folding Top Mechanism

The cylinders are serviced only as an assembly. The reservoir end plate "O" ring is replaceable. The pump cover plate is serviced as an assembly and the rotors are serviced as a package with the "O" rings.

CYLINDER HOSE ROUTING (Fig. 2)

Removal

(1) Remove screw from clips.

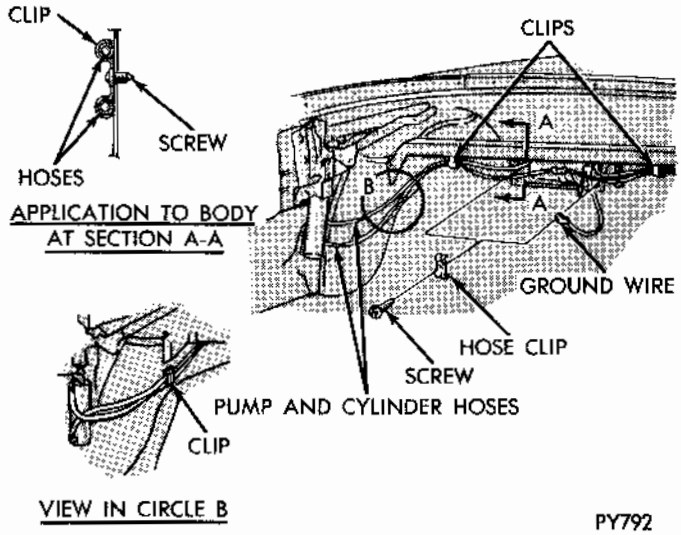

Fig. 2 Cylinder Hose Routing

(2) Remove ground wire eyelet from support bracket.

(3) Remove cylinder hoses from rear seat back support.

(4) Lift motor pump and cylinder hoses out of wheelhouse and rear seat back clips.

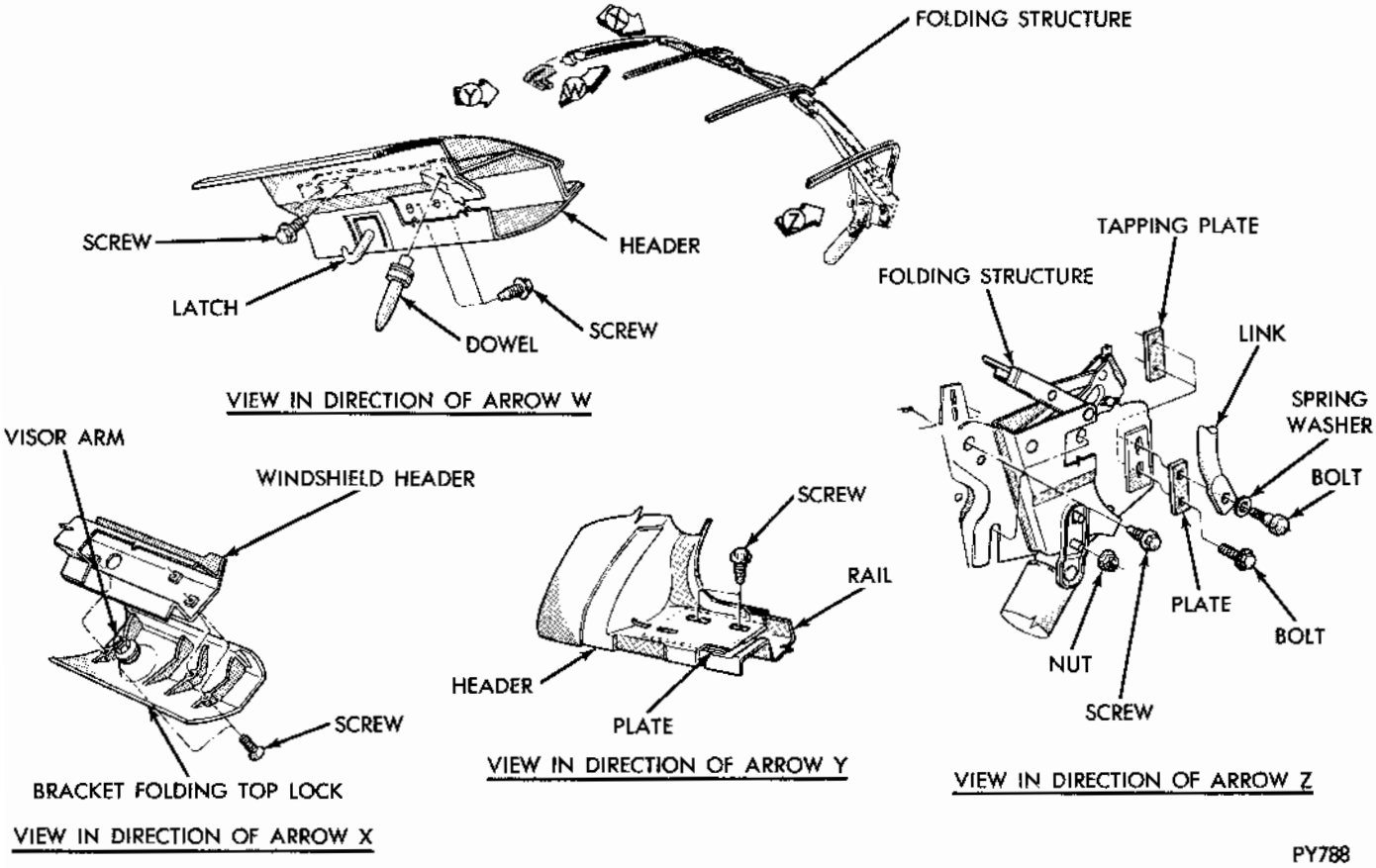

Fig. 3 Folding Structure And Linkage

MyMopar.com

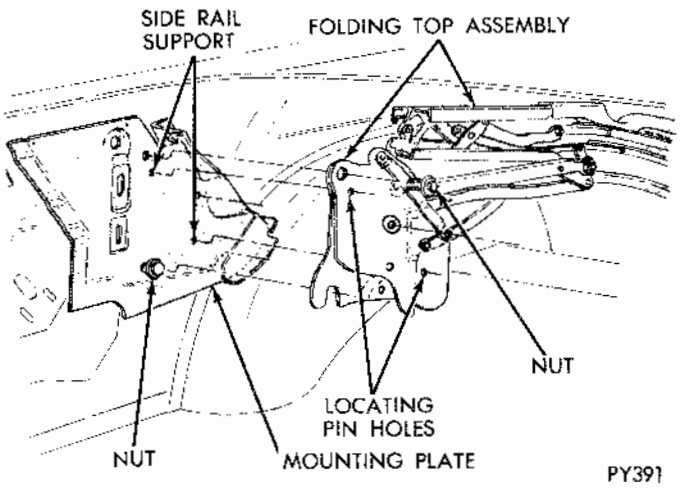

Fig. 4 Mounting Plate Assembly

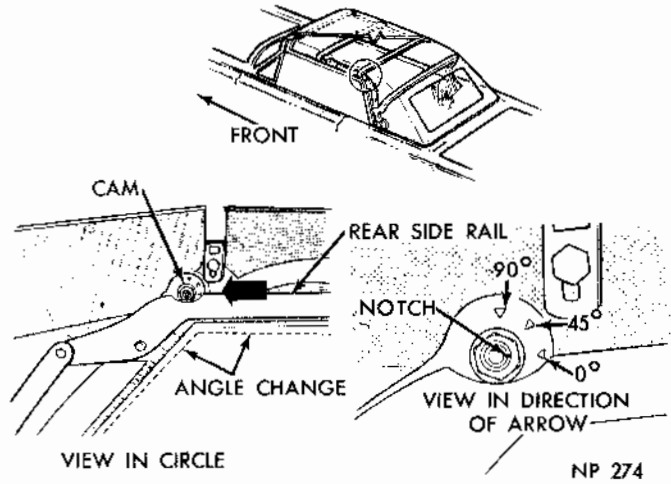

Fig. 5 Cam Assembly

Installation

(1) Route existing top lift motor pump and cylinder hoses thru existing clip on wheelhouse panel and rear seat back.

(2) Position cylinder hose clip to rear seat back support.

(3) Position existing top lift motor gound wire eyelet between clip and support bracket.

(4) Secure clips with screw.

ADJUSTMENTS

Minor Adjustments are provided to assist in aligning the top header to the windshield header to prevent leakage into this area; to improve top frontal area appearance and assure ease of raising and lowering operation.

They are also provided to assure correct alignment of the roof side rails with door and quarter glass to prevent leakage. Adjustments are provided to eliminate wrinkles in the top material.

MAJOR ADJUSTMENTS

Major adjustments are at the cam, control link bracket and the outer mounting. These adjustments are necessary to improve roof side rail alignment if minor hinge and header adjustment do not completely correct the condition.

ROOF SIDE RAIL ALIGNMENT

The roof side rail structure (Fig. 3) consists of separate rails, hinged together to enable the top to fold into the well. The rails must be in good alignment and parallel to top edges of door and quarter glass to provide a good weatherseal.

Alignment of the rails is controlled by the side rail structure mounting support assembly (Fig. 4), cam (Fig. 5), control link and front hinge set screw.

The front hinge set screw is accessible from the bottom surface of the front rail and center rail directly below hinge. Little adjustment is possible at the hinge.

DOOR AND GLASS ALIGNMENT

After making top adjustments, doors, door glass and quarter glass must be properly aligned. Misalignment in any of these areas make it impossible to obtain satisfactory results from top adjustments alone. Glass up-stop adjustments should be made after the correct roof side rail alignment to limit the upward travel of the glass and to assure effective sealing between the roof side rail weatherstrip and glass.

LATCHING MECHANISM

Good sealing at the frontal area is dependent upon proper positioning of the top header on the windshield header. The header locating dowels are cast into the latching mechanism housings and engage sockets in the windshield header to correctly position header.

The latch hook should be adjusted to provide proper compression of the outer weatherseal on the folding top header.

The locking and unlocking effort of the latching mechanisms are adjustable. Adjust the header catch to show five or six threads for initial setting.

DOWEL BRACKET (Fig. 6)

Removal

(1) Raise top to clear windshield upper frame.

(2) Remove anti-rattle from dowell bracket.

(3) Remove dowel bracket mounting screw.

(4) Remove dowel bracket from windshield upper frame.

MyMopar.com

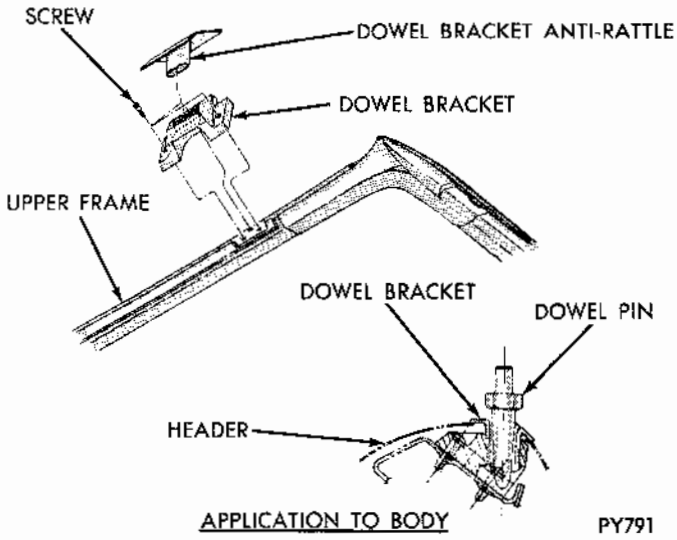

Fig. 6 Dowel Bracket

Installation

(1) Position bracket to windshield outside upper frame.

(2) Secure with screw.

(3) Position and assemble anti-rattler to dowel bracket.

(4) Check alignment of dowel pin and dowel bracket.

MANUAL TOP

Removal, installation and adjustment for the manual operated top are similar to the Electric Hydraulic top. The difference is a spring assist in place of a hydraulic pump to aid in manually raising or lowering the top. When assembling or disassembling the spring assist from the attach plate raise the top to a half open position to relieve tension on the spring.

The spring assist is mounted in the grid plate assembly like the hydraulic cylinder attach plate.

Refer to removal, installation and adjustment of the power operated top.

HEADER ADJUSTMENTS

Inspect top linkage and mouldings for sharp edges, burrs or screws that are too long which may damage the top material. Dress or file them down.

The top header is adjustable at the front roof side rails to permit fore-or-aft movement. The header is attached to the side rails by two screws on each side (Fig. 3).

Incorrect alignment between the top header and windshield finish mouldings may result in leakage or cause objectionable locking and unlocking effort. Inspect clearance for uniformity. The dowels control the fore and aft position of the folding top header.

To eliminate interference between the header and finish moulding, rotate the cams on the side rail so the cam lobes are forward. **It may be necessary to lengthen the control links one or two serrations after the cam adjustment.** If cams lobes were already in the full forward position, it may be necessary to loosen the header-to-side-rail screws and adjust header to provide proper clearance.

FRONT HINGE ADJUSTMENT

To facilitate front hinge adjustment, unfasten header latches and partially lower top, before adjusting set screws.

Leakage between the top and door or quarter glass may be caused by poor contact between roof side rail weatherstrip and glass or only a partial contact between roof rails and top edge of glass. If inspection shows leakage is due to incorrect side rail alignment at the front hinge, adjust set screw until front and center side rails provide the proper glassline. When the rails sag, it indicates the control link is too long.

CONTROL LINK ADJUSTMENT

The control links (Fig. 4) incorporate serrated adjusting links. Loosen screws just enough to permit moving links up or down.

Raise the side rail assembly by lifting the front end of the center rail until the folding top header is six to eight inches above the windshield header. Loosen the control link adjusting screws and allow the control link to seek its proper position. Tighten screws while rail assembly is held in the position described above.

CAM ADJUSTMENT

The cam assembly (Fig. 5) is used to change top header postion in relation to the windshield header. The cams turn inside the rear side rail and the thrust link. When rotated, it changes the relationship between the front and rear side rails by moving the thrust link forward or rearward.

The position of the cam high side determines the angle between the center and rear side rails. When the high side is fully forward, the angle is at the minimum and when turned rearward the angle is increased. An increased angle increases the forward "throw" of the entire top assembly.

The cam high side is indicated by a notch in the cam threaded end. Three triangular marks on the side rail indicate the amount of cam rotation when adjusting. The marks are located at the full-forward position of the high side, 45 degrees up and 90 degrees up. When adjusting, the cam high side position can be determined by referring to the

MyMopar.com

notch and the triangular marks. Before adjusting, place top in half raised position to remove all possible strain off the cam. Make sure lock nut is loose. Tap cam threaded end with a soft-faced hammer to loosen any paint bond between cam and linkage.

STACK HEIGHT

Do not move mounting plate positions until control links have been adjusted.

Stack height should be correct if the control links have been adjusted as outlined. If control link adjustment does not correct stack height, loosen lower two of the three mounting plate screws (Fig. 4). Force lower portion of mounting plates to rotate fully forward while exerting pressure downward on both sides at top of side rails. Tighten screws and inspect stack height after raising and lowering top.

TOP SHIFTS TO ONE SIDE

If necessary to pull top to one side to engage locating dowels or top shifts to one side when raising from the windshield header, inspect position of control links. It may be necessary to adjust the control links unevenly to achieve proper alignment of the top.

ELECTRICAL TESTS

Refer to the Body Electrical Unit for Tests and Wiring Diagrams.

SIDE TENSION CABLE (Fig. 7)

Removal

(1) Raise Folding Top 18 inches and prop up.
(2) Remove side tension cable screw.
(3) Remove cable eye from side rail.
(4) Loosen Front Cover Tension Cable Bracket.
(5) Remove tension table bracket from side rail.

Installation

(1) Raise folding top header 18 inches and prop up.
(2) Position tension cable bracket to attaching hole in front side rail.
(3) Secure the cover side tension cable front bracket with screw.
(4) Route eye at rear of tension cable thru weld clips on rear side rail.
(5) Position eye of cable to attaching hole in side rail support.
(6) Secure cover side tension cable with screw.

WEB STRAPS

Two web straps attached to the rear bow and the tacking strip are provided to keep the number 3 bow from moving forward and wrinkling the top material. They also prevent excessive tension on the backlight zipper. The straps are attached to the bow and tacking strip with 8 staples and 1 tack at each end (Fig. 8).

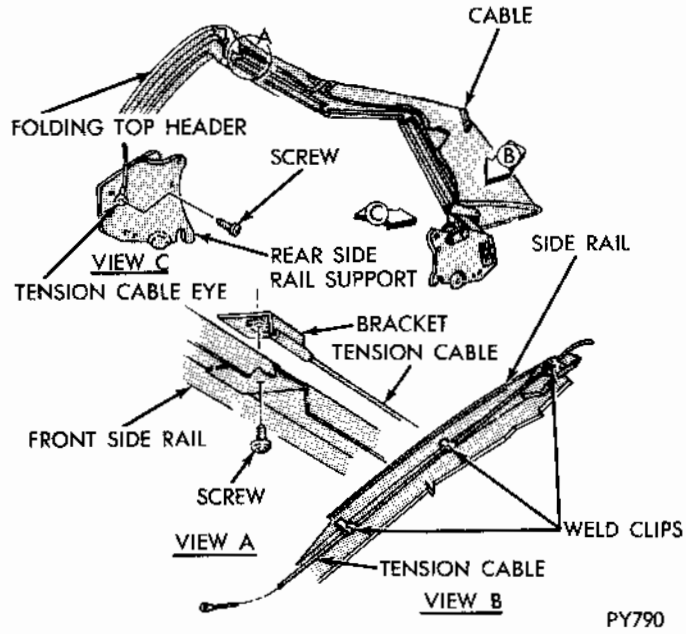

Fig. 7 Side Tension Cable

WELL LINER

The well liner (Fig. 9) is attached to the tacking strip in the quarter panel belt area with the use of stud snap-on type fasteners.

When installing the liner, apply a thin coat of cement to the front face of the liner lower edge approximately two inches wide at the area where liner attaches to upper face of the rear seat back support. Apply cement to the area contacting the wheelhouse cap. Apply cement to the upper surface of rear seat back support approximately two inches wide.

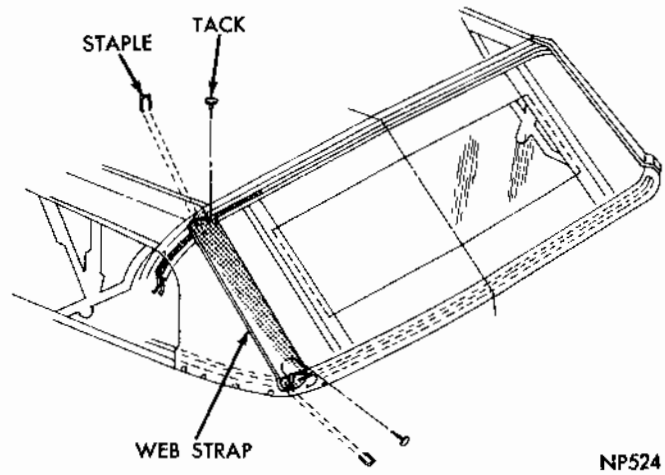

Fig. 8 Web Straps

MyMopar.com

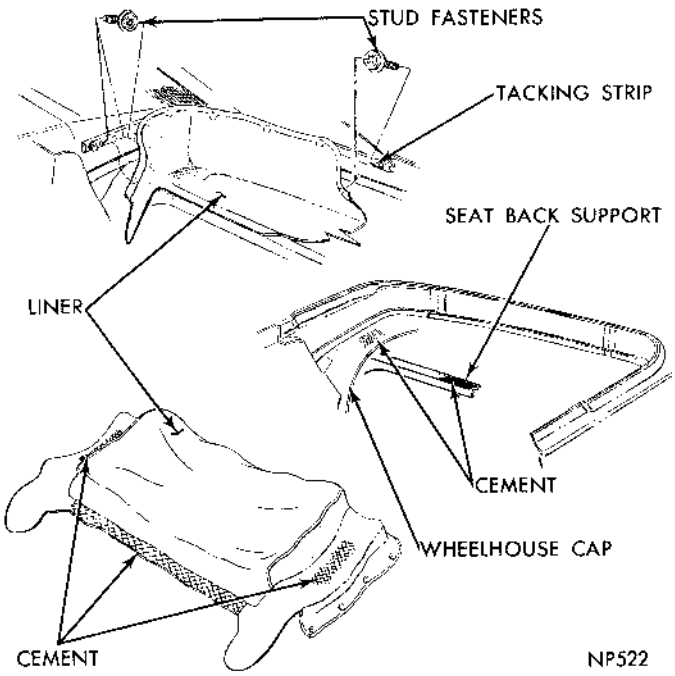

Fig. 9 Well Liner Attachment

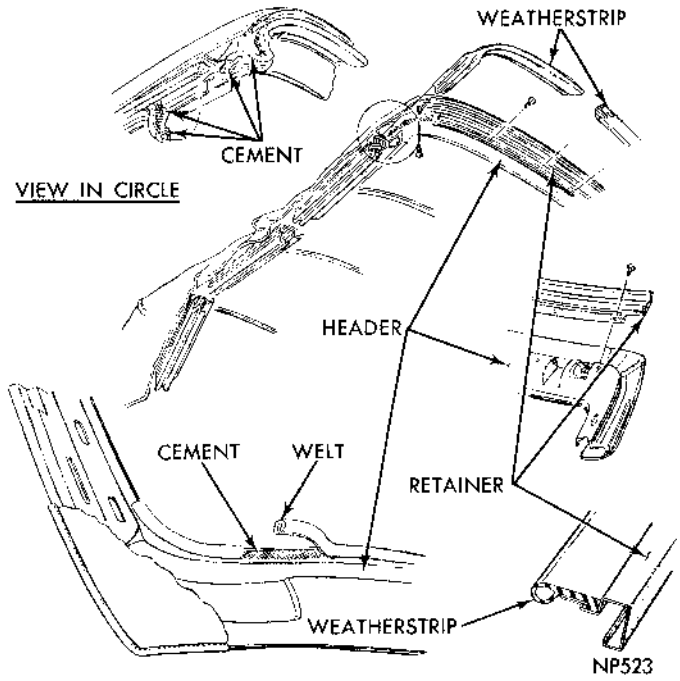

Fig. 11 Top Header Weatherstrips And Welts

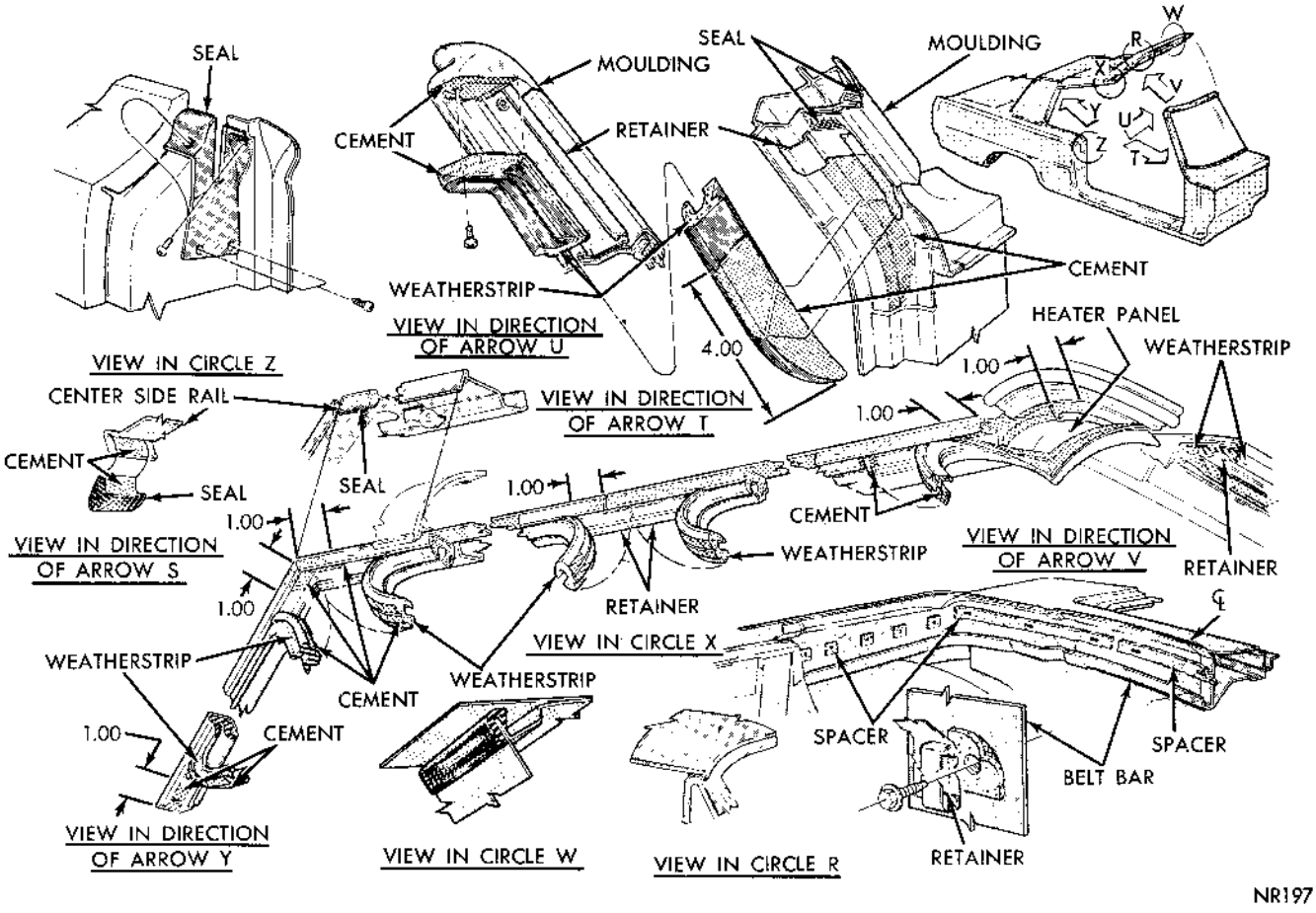

Fig. 10 Roof Rail Weatherstrip

MyMopar.com

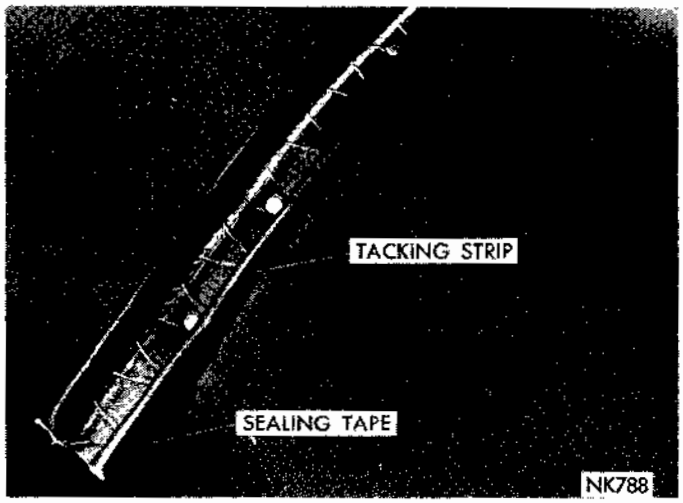

Fig. 12 Rear Bow Tacking Strip

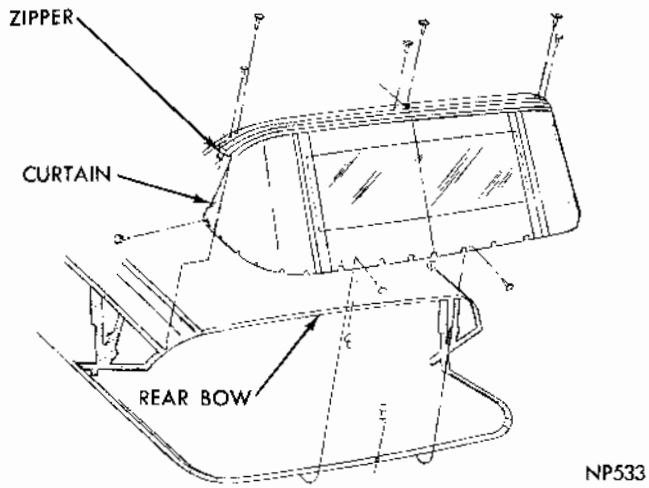

Fig. 14 Rear Curtain Assembly

WEATHERSTRIPS

Roof Side Rail

After roof side rails have been aligned, inspect the side rail weatherstrip to make sure it is providing a good seal at top of door and quarter glass.

If weatherstrip is not sealing properly, the retainer can be adjusted. The retainer has elongated attaching screw holes which permit in and out adjustment (Fig. 10).

Raise glass until top edge of glass curls outer lip of weatherstrip inward just enough to contact inner lip. Adjust up-stops to limit further upward travel of glass.

Top Header Weatherstrips and Welts

The entrance of water and air between the top and windshield headers is eliminated by a tube type weatherstrip (Fig. 11) secured to the underside of the top header. The forward edge of

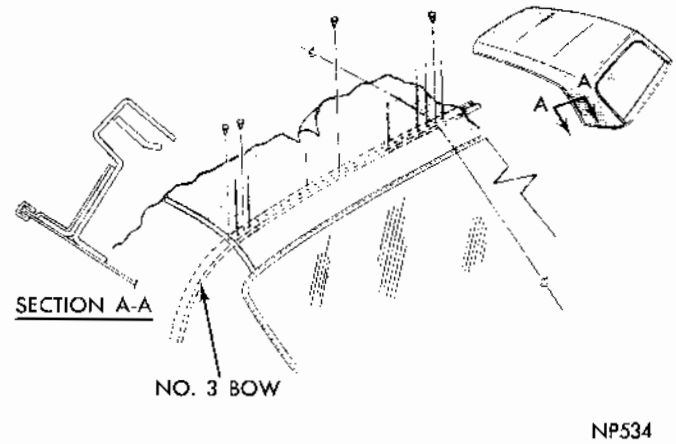

Fig. 13 Removing Staples And Tacks At Rear Bow

weatherstrip contacts windshield header outside moulding. A rubber welt is cemented to the header flange.

Seals and Sealers

When repairing or replacing a seal, or weatherstrip at the header and pillar areas, care should be exercised to see that seals and weatherstrips are firmly seated in correct alignment and are free of twists. Clean all areas thoroughly, before installing weatherstrips and seals.

FOLDING TOP AND WELL COVER

Removal

A visual inspection of the weatherstrips for damage or excessive wear should be made before removing the top cover. Inspect the top cover cables to make sure they are correctly connected. Inspect the top cover stay pads for excessive wear or moisture stains. Inspect web straps at rear bow.

(1) Place protective covers over the deck lid, deck lid upper panel, hood and cowl areas.

(2) Unsnap top boot and lay over rear seat back.

(3) Unzip the backlight and lay in well.

(4) Remove retainers from ends of tacking strip on rear bow and spread tacking strip (Fig. 12).

(5) Using a sharp pointed tool remove staples and tacking strip. **Use care not to damage the top material if the original cover is to be reinstalled. In some instances the staples ends may have become peened over and if excessive effort is required to remove them, it is advisable to cut the heads off the staples and remove the pieces after the top cover has been removed, otherwise damage to the top material may result.**

(6) Remove staples and tacks (one tack used on each side at binding areas and at centerline area

MyMopar.com

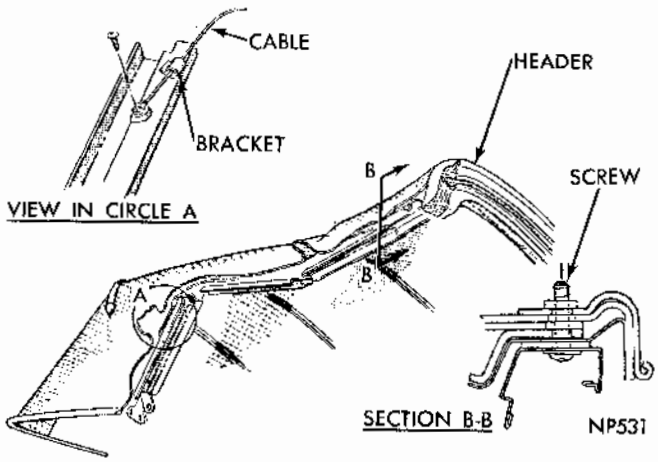

Fig. 15 Cover Tension Cable

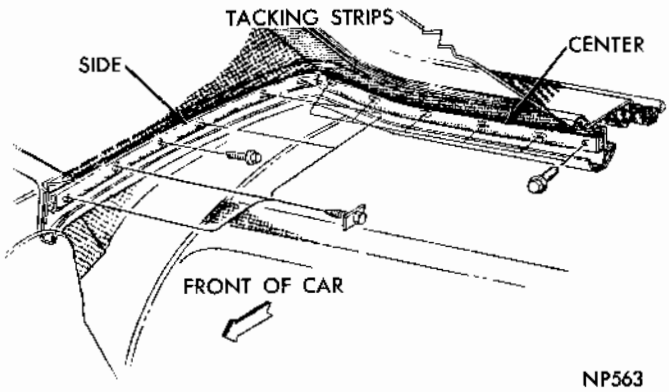

Fig. 17 Cover Tacking Strip

attaching top cover to rear bow (Fig. 13).

(7) Prop top off of windshield header and remove moulding from top header. The moulding attaching screws are located under the weatherstrip.

(8) Raise top to the 1/2 open position and remove rear roof rail weatherstrip (Fig. 10). Mark location of retainer screws on roof rail to aid in reassembling, and remove retainer.

(9) Remove top and rear curtain material from roof rail (Fig. 14).

(10) Remove sealing tape, staples, drive nails and tacks at the top header.

(11) Mark location of top material bead on ends of cover pads and loosen seals at corners.

(12) Remove front screws from front roof rail weatherstrip retainers and remove locking flaps from between retainer and roof rail.

(13) Remove cover cables at front roof rail weatherstrip retainers and at rear pillars (Figs. 7 and 15) if original cover is to be reinstalled tie a cord to one end of cables prior to removing. When cables are removed cord should be left in listing.

(14) Remove cover from the folding linkage.

(15) Remove rear curtain assembly.

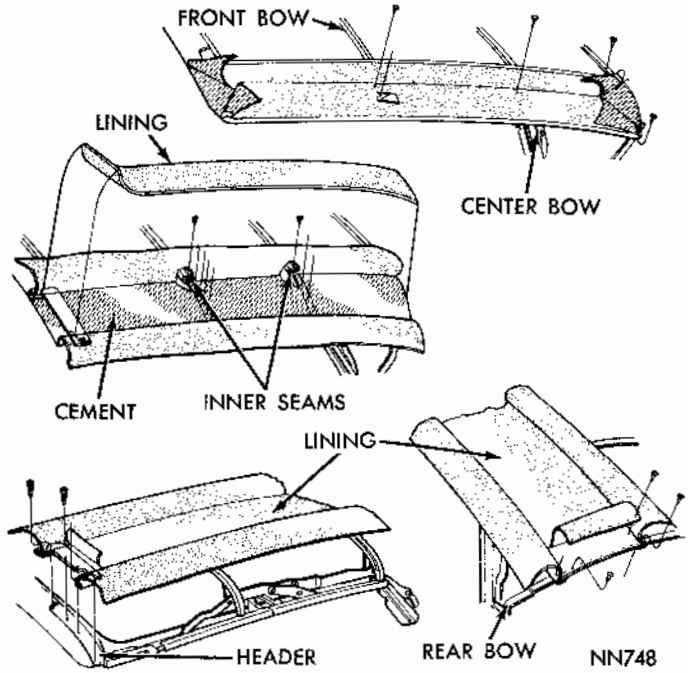

Fig. 16 Stay Pad Attachment

Installation

The rear curtain, backlight and zipper is serviced as an assembly.

Prior to installing cover, inspect roof bow felt pads for moisture or damage. The pads are a press fit in the bows. The cover stay pads should be inspected for damage and moisture. The stay pads are attached to the header and roof bows with tacks (Fig. 16).

The rear window zipper top half is tacked to the rear bow (Fig. 12) and the curtain bottom portion is attached to tacking strips (Fig. 17).

The circled numbers shown on the reference illustrations indicates the particular step number being read in the installation procedure (Figs. 20 and 21).

(1) Position folding top less trim (in folded position) to body.

(2) For attaching side flap apply even coat of adhesive approximately 2 inches wide to underside of top header, from latch hook outboard to underside of front rail.

(3) Open top and adjust to body.

(4) Position center, and side to belt bar retainer and tacking strip to trim.

(5) Apply even coats of adhesive to upper rear flange, header, header center welt, and header side welts. Install center and side welts to header flange.

(6) Assemble stay pad to header using adhesive. Install screw to header.

(7) Assemble top stay pad to Number 1, 2 and 3 bows.

MyMopar.com

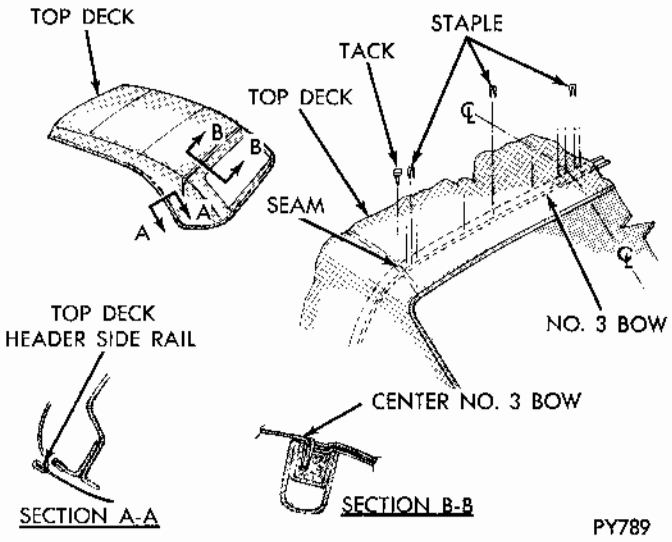

Fig. 18 Top Deck To No. 3 Bow

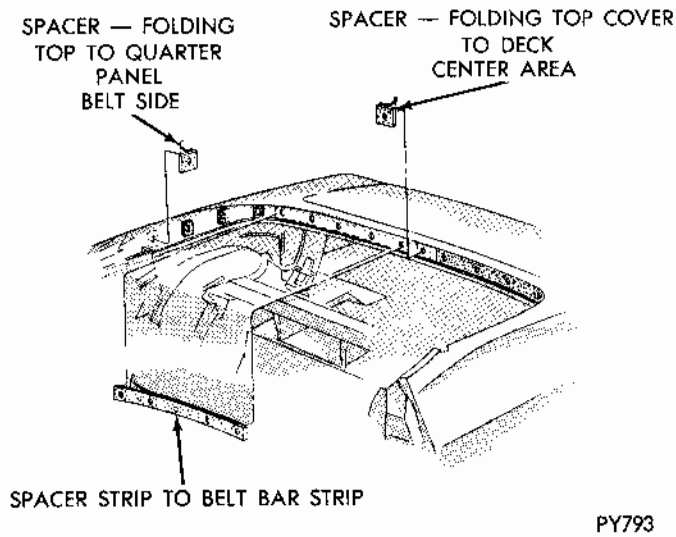

Fig. 19 Cover to Belt Bar

(8) Assemble rear curtain to Number 3 bow, belt bar retainer and tacking strip.

(9) Assemble rear curtain stay straps to Number 3 bow, belt bar retainer, and tacking strip.

(10) Assemble side tension cable to deck and side quarter assembly pocket.

(11) Assemble tape to rear rail top material retainer. Apply an even coat of adhesive to trim retainer and top fabric. Bond fabric to trim retainer. Assemble retainer to rear rail.

(12) Secure side tension cable at front and rear using screws.

(13) Position and secure top deck and side quarter assembly to Number 3 bow. Assemble side quarters to belt bar tacking strips (Figs. 18 thru 21).

(14) Assemble top deck and side quarter assembly to header and rear side rail trim retainer.

(15) Assemble retainer weatherstrip to header.

(16) Assemble wire on binding to Number 3 bow.

(17) Position top to body. Adjust belt bar retainers as necessary to avoid wrinkles in top material.

(18) Apply an even coat of adhesive along underside of front face well cover and at area where assembly connects to wheelhouse cap. Allow adhesive to dry onto entire area of wheelhouse cap and rear seat back support surfaces, position top well cover and press to bonded surfaces of wheel caps and rear seat back support. Fasten edges of well cover assembly by snap attaching curtain fasteners to studs.

Top Deck To No. 3 Bow

(1) Remove header prop and lower header. Secure latch mechanism. Align top deck and side quarter assembly material to frame.

(2) Position centerline locating hole of top deck cover assembly to centerline notch of number 3 bow.

(3) Secure with staples to number 3 bow (staples to be installed toward front of bow).

(4) Pull taut and align top deck cover assembly at reinforcement along number 3 bow.

(5) Secure with staples. Also align side quarter binding with top material retainer attached to rear rail.

Care must be taken at this time to assure that the top deck valance is straight and without puffs or wrinkles.

(6) Pull top deck material at header to assure a wrinkle free top deck.

(7) Remove previously installed staples when necessary to realign top deck cover assembly.

(8) Secure top deck to number 3 bow at reinforcement with staples.

(9) Secure top deck cover assembly at heat seam and reinforcement joint to number 3 bow with tack.

COVER TO BELT BAR

(1) Remove pressure adhesive protective paper from spacer strip and apply adhesive side to bar-deck opening belt center.

(2) Remove pressure adhesive protective paper from spacer and apply adhesive side to bar-deck opening belt center.

(3) Remove pressure adhesive protective paper from spacer cover to belt bar and apply adhesive side to quarter panel belt side upper.

(4) Apply pressure to all spacers to secure. **Care must be taken to align holes in spacers with attaching holes in belt bars.**

MyMopar.com

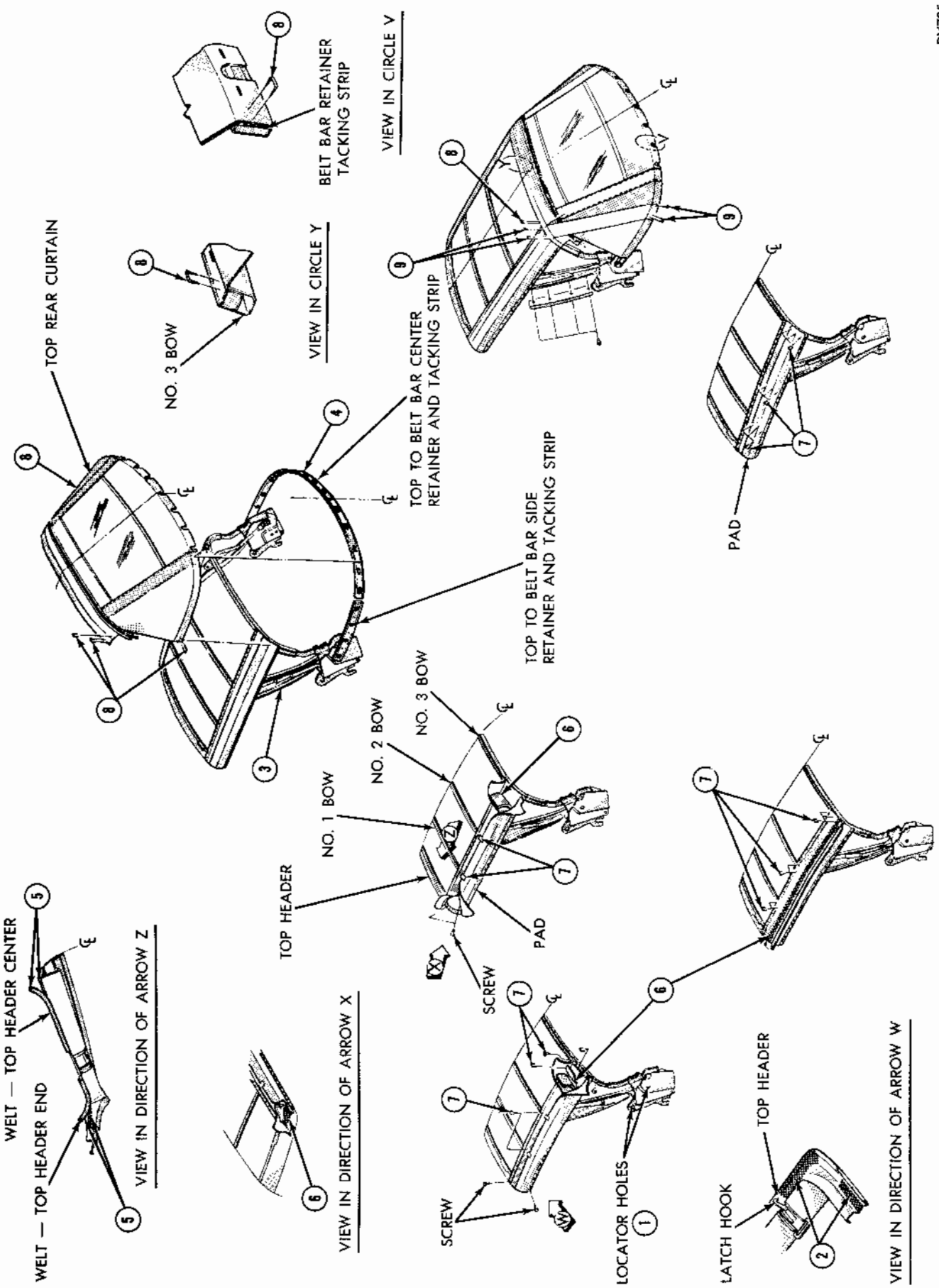

Fig. 20 Folding Top

MyMopar.com

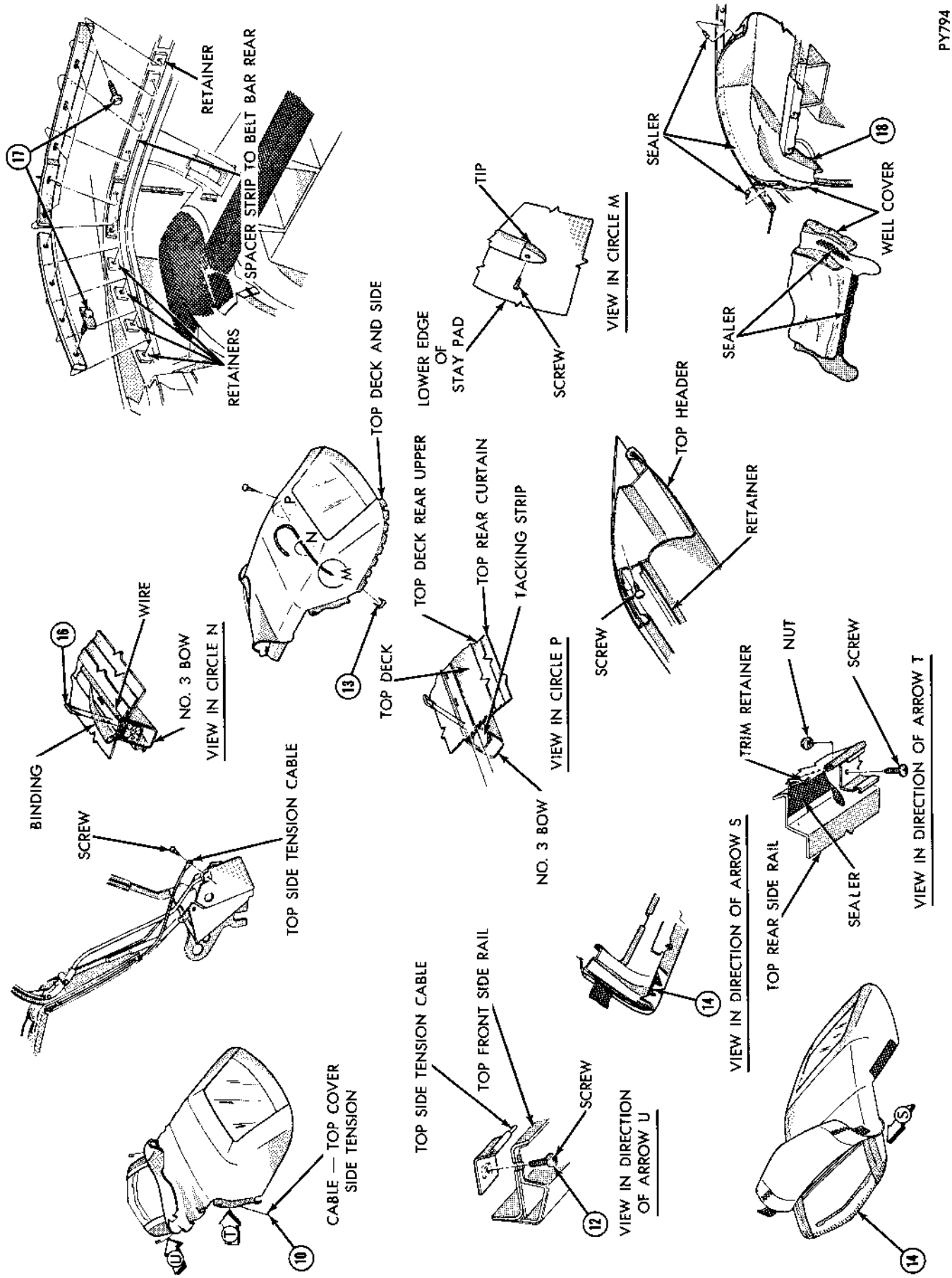

Fig. 21 Folding Top And Well Cover

MyMopar.com

VINYL ROOF COVERING

INDEX

	Page
AIR BUBBLE REMOVAL	2
COVER REPLACEMENT	1
VINYL REPAIR	4
CLEAN SURFACE	3
MAKING GRAINING TOOL	3

SERVICE PROCEDURES

COVER REPLACEMENT

Removal

(1) Remove windshield rear window and mouldings on non-cemented type application. On cemented in type windows, remove mouldings only. To aid in installation of mouldings, mark clip hole locations with a removable type marker.

(2) Remove roof side mouldings and pull cover off of roof panel.

(3) Remove all sealer from drain trough, windshield and rear window reveals.

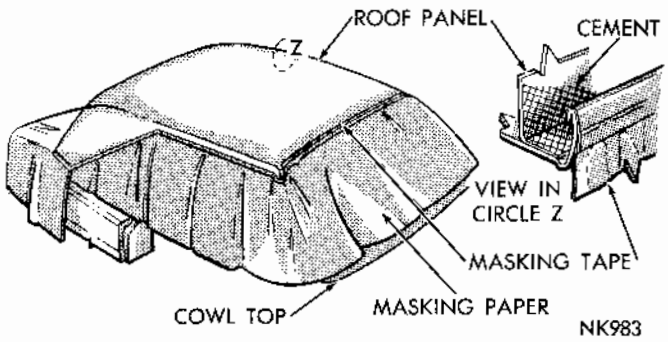

Fig. 1 Masking The Body

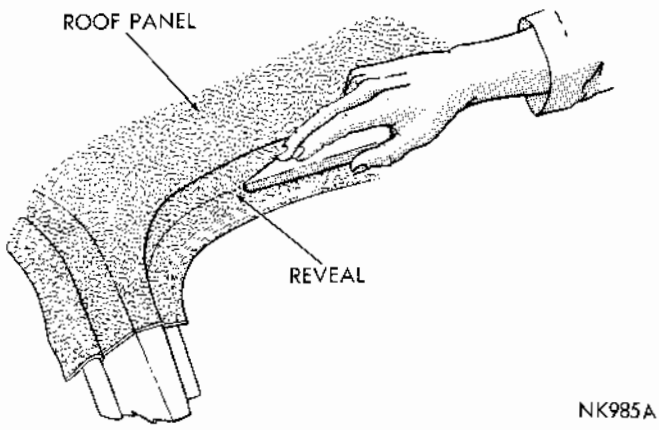

FIG. 3 Positioning Cover In Window Reveals

Installation

Inspect old cement to make certain there are no high or low areas, or areas without cement.

(1) Mask body (Fig. 1) from edge of drain trough across upper "A" pillar, windshield and rear window reveal, top of deck upper and bottom or roof panel at belt line.

(2) Locate and mark center line of roof panel and vinyl cover at front and rear ends.

(3) Apply a thin film of cement to center four inches of roof panel and vinyl cover.

(4) When cement becomes tacky, position cover on roof aligning centerline marks.

(5) Apply cement to one half of roof panel and extension and to the cover half on same side (Fig. 2).

(6) When the cement becomes tacky position

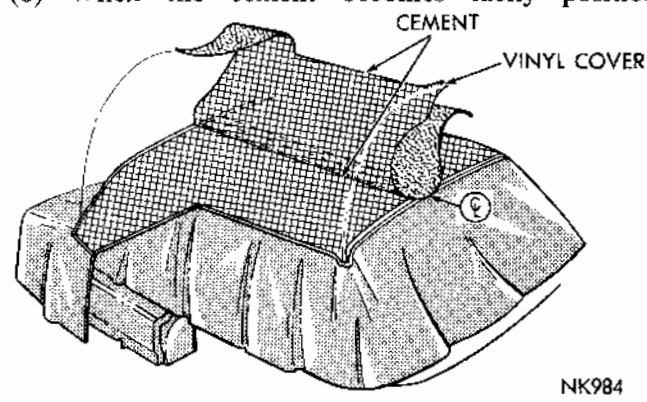

FIG. 2 Positioning Cover On Roof

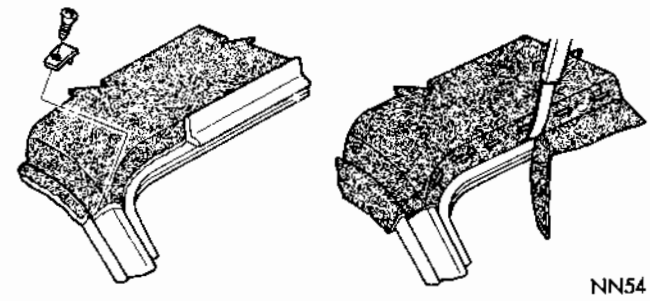

FIG. 4 Trimming And Sealing Cover At Windows

MyMopar.com

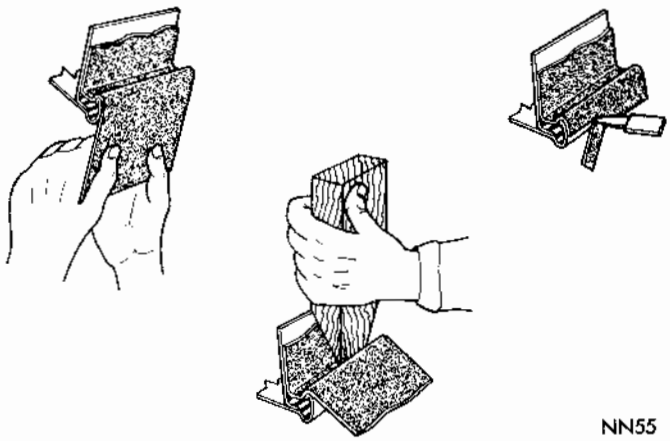

FIG. 5 Positioning Cover At Sides

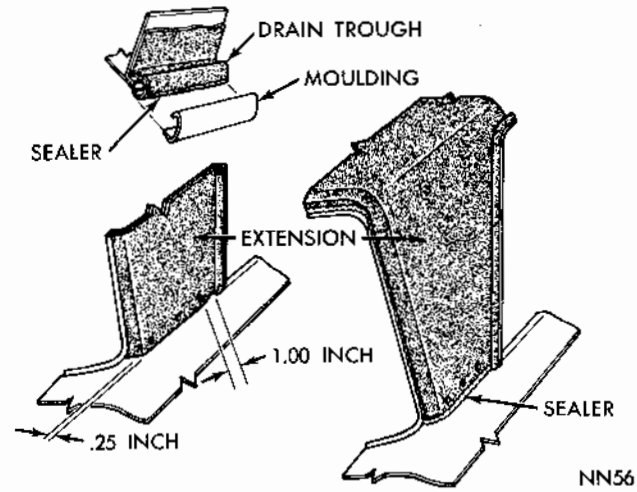

FIG. 6 Sealing Cover At Sides

cover on roof panel.

(7) Repeat steps 5 and 6 for the opposite side.

(8) Using a new paint roller, pressurize cover to the roof working from center area toward drain troughs.

(9) Press cover into windshield and rear window reveals using a dull pointed fiber tool (Fig. 3).

(10) Position cover to roof panel extension making certain all wrinkles are removed.

(11) Trim fabric at base of windshield reveal, halfway between upper and lower edges of pillar moulding (Fig 4).

(12) Trim fabric at base of rear window reveal.

(13) Using a dull pointed tool, press fabric into drain trough to achieve maximum contact of roof cover material to drain trough (Fig 5).

(14) Grasp outboard edge of cover and while pulling material outward and down, use upper edge of drain trough flange as a breakover for draping material onto outboard drain trough flange face (Fig. 5). **Care must be taken to avoid pulling loose the cover material** applied to base of drain trough.

(15) Press material against drain trough flange face for full length of outboard sides of roof cover.

(16) Trim excess material hanging below drain trough flange about 1/8 inch above lower edge of flange (Fig. 5).

(17) Locate and punch holes in cover at roof extension belt line.

(18) Trim cover on a line 1/4 inch below belt line moulding holes and curving upward to meet drain trough.

(19) Apply a bead of sealer to trimmed edge of cover at roof panel and smooth out to form a seal (Fig. 6).

Install sealer along entire length of outboard trimmed edges of cover material to seal exposed edge adjacent to drain trough flange.

(20) Apply a 1/4 inch ball of sealer to index studs of pillar mouldings.

(21) Install side drain trough mouldings, windshield and rear window mouldings.

(22) Remove masking material and inspect cover for air bubbles.

AIR BUBBLE REMOVAL

(1) Place strips of masking tape over surface of bubble.

(2) Using a No. 19 hypodermic needle and suitable syringe, insert 3M Vinyl Trim Adhesive No. 8064, or equivalent, into bubble area. —**Extreme care must be used to avoid depositing any adhesive on the top surface of the vinyl cover**— The perforation must be made in center of bubble, through masking tape and vinyl material. Approximately 0.5 mil of adhesive per square inch should be used.

(3) Remove needle and work adhesive to cover affected area by pressing vinyl to roof carefully. This will also transfer some of adhesive to surface of vinyl cover.

(4) Allow cement to dry 5 minutes at room temperature.

(5) Heat bubble area with relative low heat (150 degree- 160 degree F.) until bubble area begins to enlarge in circumference. Infra-red heat lamps provide a suitable source of heat.

(6) Remove heat source and allow cover to cool. A method of rapid cooling will be beneficial.

(7) Using a **DRY** No. 19 hypodermic needle, puncture cover 4 times equally around outer circumference of bubble to provide an escape route for entrapped solvent and air.

(8) After bubble collapses, press cover to metal surface, starting from one side of bubble and working toward opposite side until it conforms to metal surfaces and all raised surfaces disappear.

(9) Keep vehicle from hot sunlight and other direct heat sources

MyMopar.com

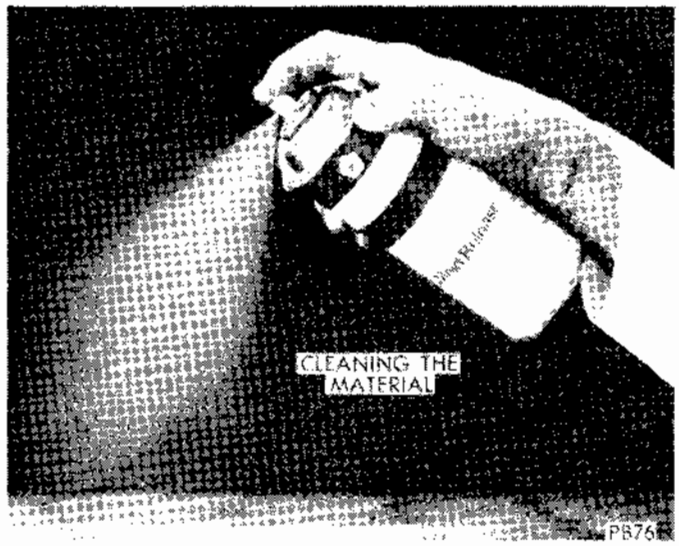

FIG. 1 Cleaning The Material

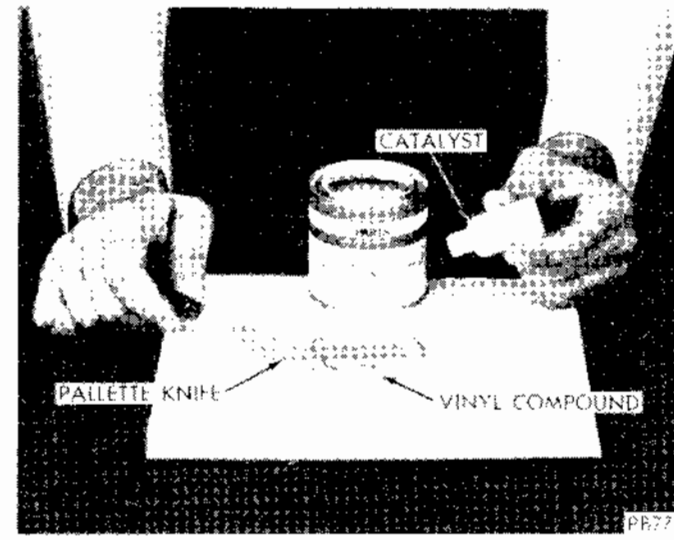

FIG. 2 Mixing Grain-On Compound

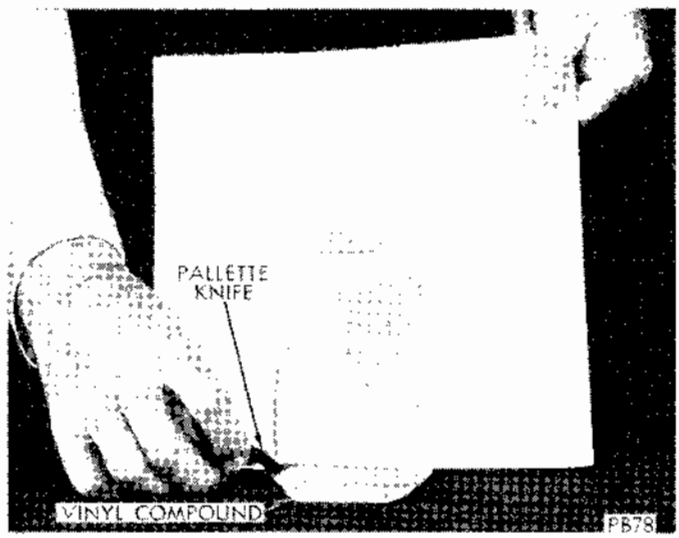

FIG. 3 Application Of Compound To Vinyl Material

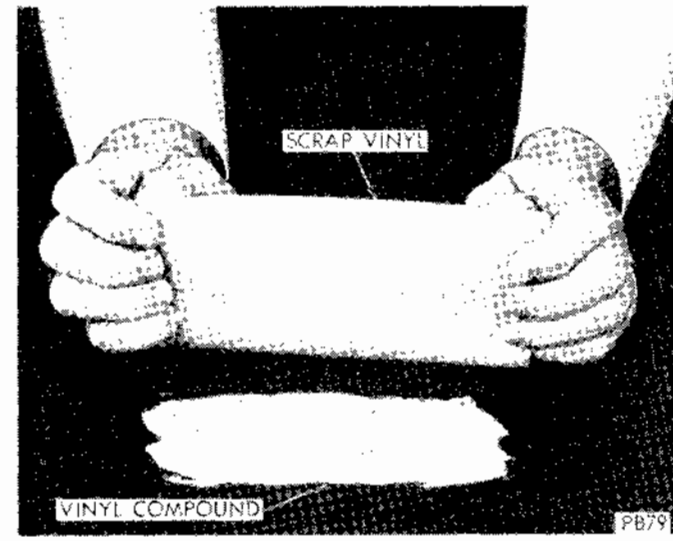

FIG. 4 Application of Second Vinyl Material

(10) Examine top after a 24 hour period.

CLEAN GRAINED SURFACE OF THE VINYL TOP REPAIR AREA

(1) Spray a little Chrysler All Purpose Cleaner or equivalent on repair area and wipe surface dry with a fine texture rubber sponge.

(2) To insure the surface is thoroughly dry, use heat from the heat gun.

(3) Put a small amount of Chrysler Vinyl Prep or equivalent on a clean lint free rag and wipe the full surface once, in one direction.

(4) Chrysler Vinyl Prep or equivalent opens the pores in the vinyl, but **back and forth rubbing makes the surface tacky.**

(5) Apply heat from heat gun about three seconds to make sure no solvent remains in the repair area.

MAKING THE GRAINING TOOL:

The graining tool will duplicate any print the technician desires to make. It is made by taking an impression from the vinyl material adjacent to the repair area having the same print or grain as that material under repair.

(1) Clean the vinyl material to be used to make a print with Chrysler All Purpose Cleaner or equivalent, dry it with the heat gun.

(2) Spray a 12 in. X 12 in. surface with Chrysler Mold Release or equivalent (which is a paintable mold release) (Fig. 1). It can be washed from vinyl material with all purpose cleaner when necessary.

(3) Remove about two tablespoons of Chrysler Grain-on material or equivalent from the container, place it on a steel or glass surface, then

MyMopar.com

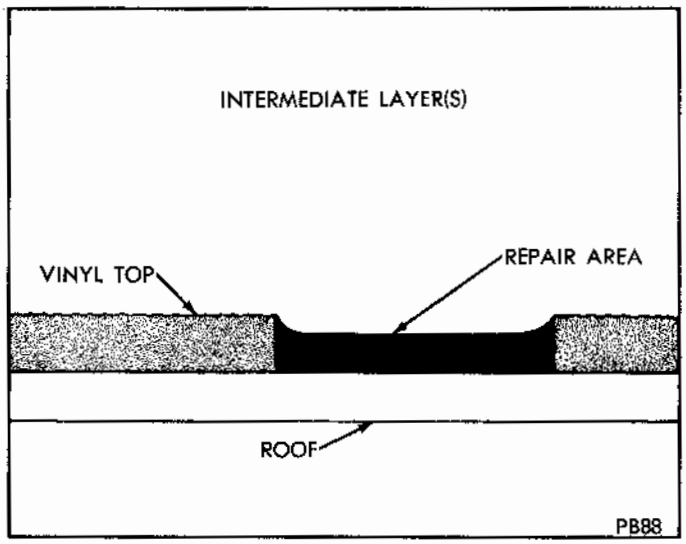

FIG. 8 Secondary Layer Application

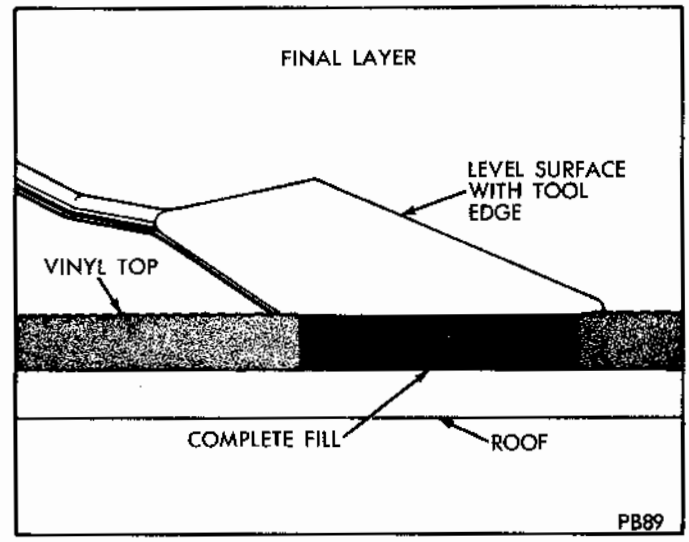

FIG. 9 Final Layer Application

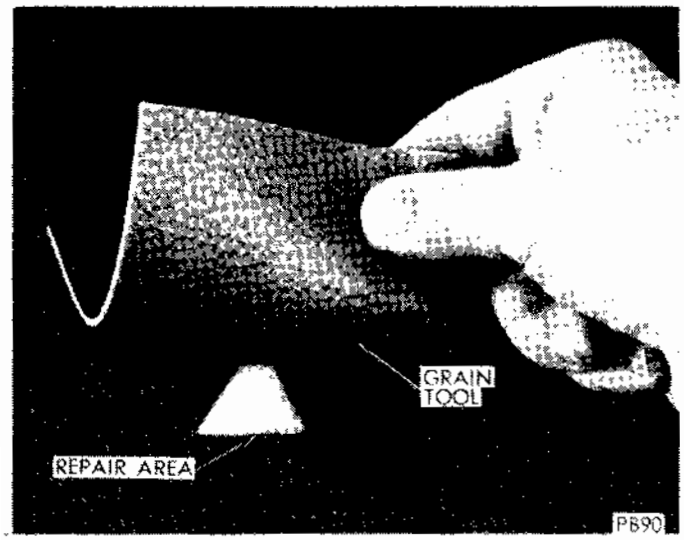

FIG. 10 Grain Pattern Die Application

FIG. 11 Vinyl Color Spray

using the thumb of your free hand to press the edges of the vinyl material down into the welding compound, the edges will now lie flat as you apply heat to cure the weld. **UNLESS THE WELDING COMPOUND IS PROPERLY CURED IT WILL FALL APART.**

(14) At first the welding compound will appear milky but as the heat cures it, it will turn translucent or clear, time required varies from ten to twenty seconds according to the intensity of the applied heat. **Do not be afraid to use heat.**

(15) When the first weld is properly cured you will clearly see through the weld. It is best that each weld be cooled with air from the gun by opening the shutter fully with switch at cold position, before applying the next layer of welding material (Fig's. 7 and 8).

(16) Each layer of the weld is applied and cured in the same manner as the first. A cold water wet cloth or sponge can also be used to cool the weld.

(17) The welding compound on the fourth or last weld must be leveled off flush with the top surface using an offset pallette knife as a straight edge before applying heat (Fig. 9).

(18) When satisfied that the last weld is flush with the surface, then grain or print the repair by heating the repair until the surface material in the immediate vicinity begins to shine.

(19) Remove the heat gun in the one hand and with the other firmly press the graining tool into the hot surface, holding it there about five seconds (Fig. 10).

(20) When the graining tool is removed the technician will find he has grained his repaired hole and blended the grain into the material around it.

MyMopar.com

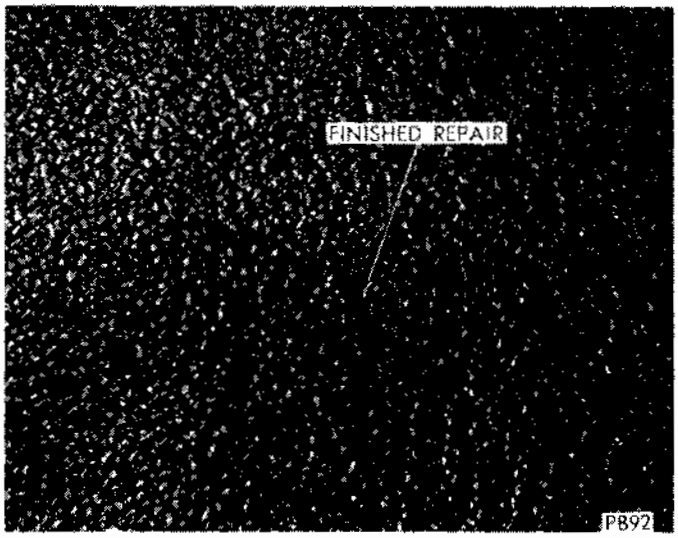

FIG. 12 Finished Repair

(21) After graining, the weld may not be flush with the surface, if too low, add more welding compound, cure and regrain.

(22) When the grain repair area is flush and cured, apply Chrysler Liquid Vinyl or equivalent (Fig. 11).

BEFORE APPLYING LIQUID VINYL COATINGS BE VERY SURE ALL RESIDUE SUCH AS DRIED SOAPS, WAX AND ANY FORM OF FOREIGN SUBSTANCES BE REMOVED FROM THE SURFACE AND GRAIN OF THE VINYL MATERIAL.

SPRAYING OF COLORS

Chrysler Uticolor or its equivalent materials are not paints or dyes, but liquid vinyl. The vinyl surface must be properly cleaned. The first coating should be a wet one (not flooded), allowing it to dry about fifteen minutes, depending on the atmosphere. The second, a normal spray coating. If blushing occurs, permit complete drying, then spray with a mist coat. Liquid vinyl is not a surface coating but is absorbed by the parent material and becomes part of it. The absorption causes a wrinkling effect but when dry all wrinkles disappear. The spray color should not be cut with any form of solvent. When the procedures on vinyl repair are followed the finished project should be (Fig. 12).

MyMopar.com

WOOD GRAIN OVERLAY

INDEX

	Page
Application of Overlay	1
Inspection	3
Repairs	3
Major damage to wood grain film	3
Major damage to clear top coat	4
Minor damage to clear top coat	4
Minor scratches to clear top coat	4
Minor sheet metal dings in wood grain applique	4
Surface Preparation	1
Temperature	1
Wetting Solution	1

SERVICE PROCEDURES

SURFACE PREPARATION

The body surface to which the overlay will be applied must be free of grease, oil and other foreign material. Sand all areas to be covered with the overlay using No. 360 paper soaked in water or mineral spirits. The area to be sanded should be approximately 1/4 inch larger in all dimensions than the overlay, except when the overlay is turned at the door and other comparable areas. **All metal and/or paint nibs must be removed prior to application of overlay. Tack off all dust and dirt particles from the sanded areas.**

TEMPERATURE

The overlay is most easily handled when the air and application surface temperatures are between 70 and 90 degrees. For applications below 70 degrees, use heat lamps to warm the application surfaces.

WETTING SOLUTION

Thoroughly mix two to three level teaspoons of **mild powdered household detergent** per gallon of clean, warm (80 to 90 degree) water in a non-rusting type retainer.

APPLICATION OF OVERLAY (Fig. 1 and 2)

It is manadatory to remove the paper backing from the overlay and not the overlay from the backing, as possible stretching or tearing may result.

Cut overlay 1/2 inch larger than area to be covered and lay on a clean flat surface with the paper backing surface up. Hold overlay firmly and remove backing paper in a smooth 180 degree motion. Under hot, humid conditions, a slight jerking motion will aid in paper backing removal.

Thoroughly wet application surfaces of body and the adhesive surface of the overlay with the wetting solution and immediately apply overlay, grained side out, to the body. Adjust overlay so 1/2 inch of material shows beyond all edges and apply wetting solution to outer surface of overlay.

FLAT SURFACES

Use a plastic squeegee having a cloth sleeve, or is teflon coated and pressurize all flat surfaces with firm, overlapping strokes to remove all air bubbles, water, wrinkles and to assure a good adhesive contact. On vertical surfaces, pressurize and level off entire top edge first with a 3 x 4 inch squeegee, then work from top to bottom.

On horizontal surfaces, start at the center and work toward the edges using a 3 x 4 squeegee. **Do not apply pressure to edges that will be wrapped around doors, fenders, gas cap areas or to compound curve areas.**

FLANGE AREAS

(1) After being sure all metal and/or paint nibs and sanding residue have been removed, hand brush 3M Vinyl Adhesive 8064 (Quart Size Only), or equivalent, to entire flange area with a smooth, even coverage.

(2) Warm the unapplied overlay with a heat lamp.

(3) **Avoid trapping air when turning the edge** and wrap overlay around flange area. Press firmly into position with the fingers, making sure overlay overlaps the flange.

(4) Using a single edge razor blade, trim off all material extending beyond flange.

(5) Pressurize flange area with a 2 inch rubber roller to be sure that overlay is well adhered to the painted metal surface.

CONTOURED AREAS

(1) Warm the unapplied overlay with a heat lamp, working on an area no more than 1/2 inch larger than the squeegee.

(2) Using the 3 x 4 inch plastic squeegee, pressurize and level off the small warmed area.

(3) Repeat warming and pressurizing until entire contoured surface is completely adhered and free of air, water and wrinkles.

MyMopar.com

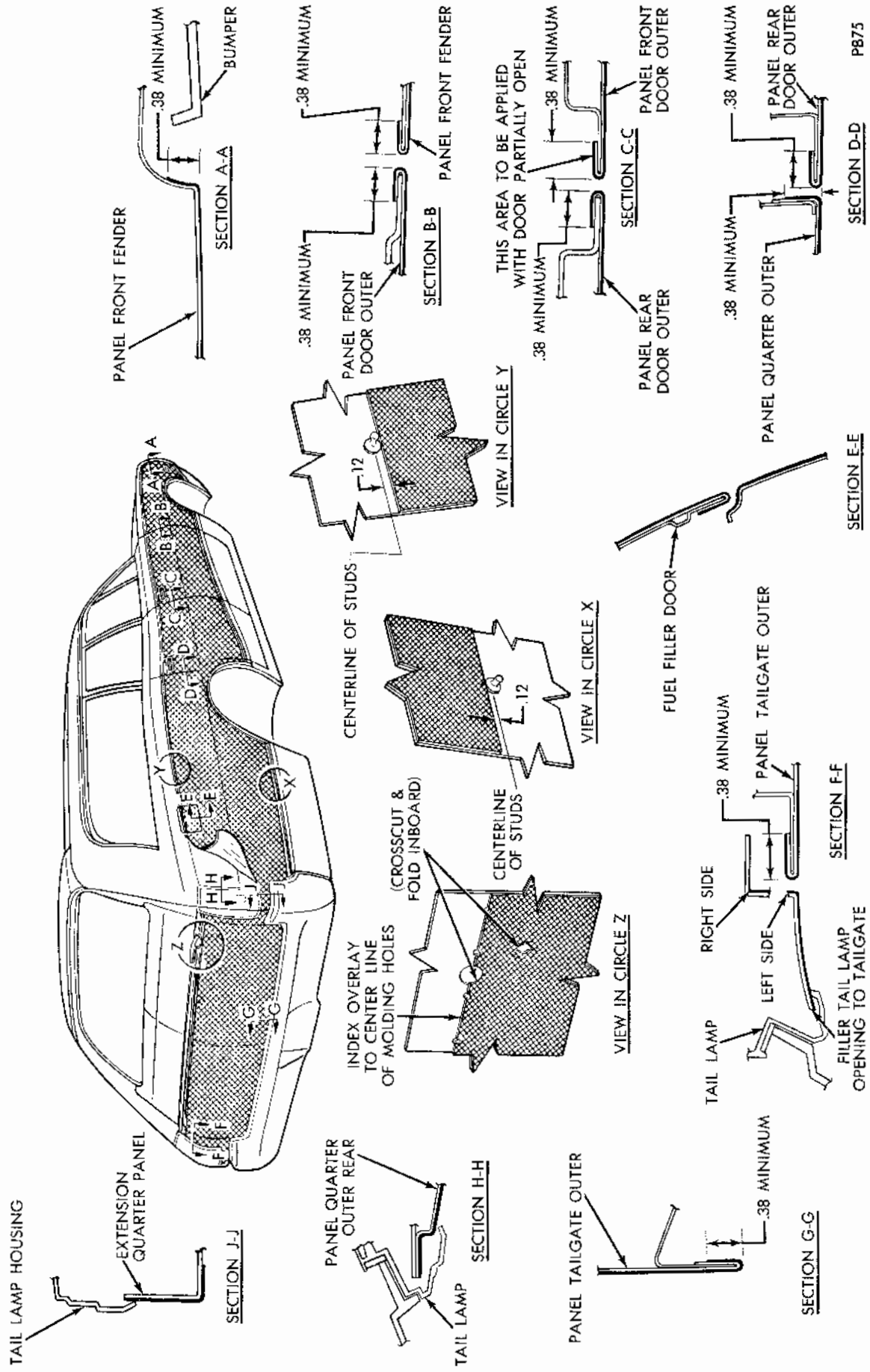

Fig. 1 Wood Grain Overlay Coronet

MyMopar.com

INSPECTION

Upon completion of an area, inspect for blisters due to trapped air or water. All blisters should be worked out with the squeegee, or punctured with a sharp needle or pin and then pressurized until the film adheres to the body surface. **All edges must be adhered to the body surface.**

REPAIR OF MAJOR DAMAGE TO VINYL WOOD GRAIN FILM

(1) To repair major damage, such as torn wood grain film, the entire panel must be installed.

(2) Remove the mouldings surrounding the wood grain film, (if applicable). **The film is most easily handled when the temperature of the air, film, and metal surface is between 70 degrees and 90 degrees F. Use a heat gun, heat lamp, or steam jet to warm film and body surfaces.**

(3) Bump out sheet metal as required, utilizing approved procedures.

(4) Remove all loose pieces of wood grain film in damaged area.

(5) Sand and feather-out edges of wood grain film with 360 grit sandpaper.

(6) Fill imperfections with glazing putty approved for service use.

(7) Remove excess putty and allow to dry.

(8) Sand the putty flush with the panel surface using 360 grit sandpaper.

(9) Cut off and remove portions of film that is wrapped around door edges and door openings.

(10) Sand entire panel including edges with 400 grit sandpaper.

(11) Wipe off surface with a clean rag dampened with a clean solvent, such as Naphtha, isopropyl alcohol heptane, or equivalent.

(12) Clean with tack rags to remove all dirt and lint from sanded surfaces.

(13) Lay the film on a clean flat surface with backing up. Hold film firmly to surface and remove backing in a smooth motion. **IT IS NECESSARY TO REMOVE BACKING FROM FILM; NEVER FILM FROM BACKING AS A POSSIBLE FILM STRETCHING OR BREAKING MAY RESULT. Fingerprints will adversely affect adhesion. To minimize this contamination, hold vinyl wood grain film in corners only.**

(14) Thoroughly wet surface of body and adhesive surface of decorative film with a wetting solution.

The wetting solution is prepared by adding two or three level teaspoons of a mild detergent per one gallon or clean warm (80 degrees 95 degrees F.) water. NEVER USE SOAP OR HARSH DETERGENTS.

(15) Immediately apply wetted decorative film to body. Apply wetting solution to outer surface of film to provide for easy squeegeeing.

(16) Using a squeegee, pressurize film to body with firm overlapping strokes to remove all air bubbles, water and wrinkles, and to assure good

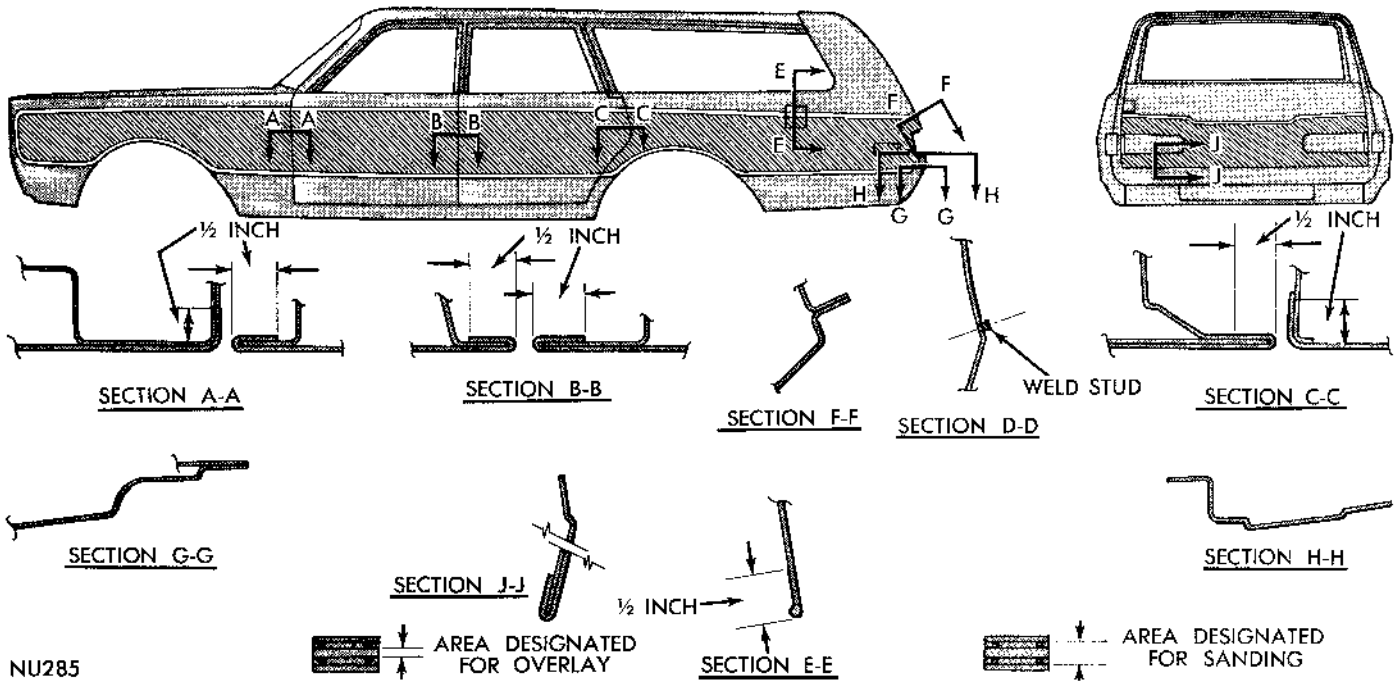

Fig. 2 Wood Grain Overlay Dodge

MyMopar.com

adhesive contact. Start from the center and work outward.

(17) Pressurize surface a second time and dry surface with a piece of clean cheesecloth.

(18) When wrapping film around door flanges, first raise temperature of unapplied film to approximately 150 degrees F. by means of a heat source such as steam, hot air guns, or lamps.

(19) Wrap film around door hem flange area and press it firmly into position. **Avoid trapping air when turning the edge.**

(20) Pressurize flange area with a 2-inch rubber roller to be sure film is well adhered to painted metal surface.

(21) Where film has bridged an opening, such as the gas filler tube opening, cut film diagonally ("X" slit) across opening so that resulting quarter sections may be pressurized to body surface.

(22) Raise temperature of unapplied film to approximately 150 degrees F. by means of a heat source such as a heat gun, lamp or steam.

(23) Fold wood grain film into opening and press firmly into position.

(24) Trim off excess material.

(25) Inspect for blisters due to trapped air or water. All blisters should be worked out with a squeegee, or punctured with a sharp needle or pin, and then pressurized until film adheres to body surface.

(26) Install mouldings.

REPAIR OF MAJOR DAMAGE TO THE CLEAR TOP COAT

(1) To repair extensive surface scratches and marks in clear coating, remove mouldings surrounding wood grain film.

(2) Lightly sand entire panel, removing all defects with 400 grit sandpaper.

(3) Wipe off surface with a clean rag dampened with a clean solvent such as Naphtha, isopropyl alcohol, heptane or equivalent.

(4) Clean with tack rags to remove all dust and lint from sanded surfaces.

(5) Mask body to prevent overspray.

(6) Spray entire panel with Air Dry Repair Clear Enamel Top Coat. **Minimum film thickness shall be .001 inch.**

(7) Air dry at room temperature.

(8) Install mouldings.

REPAIR OF MINOR SHEET METAL DINGS IN THE WOOD GRAIN APPLIQUE

(1) Using a heat gun or lamp, raise temperature in dinged area to approximately 150 degrees F. This should unbond wood grain film from depressed sheet metal. This helps to prevent film from shattering when hammered.

(2) Bump out sheet metal ding in a conventional manner.

(3) Utilizing a hypodermic needle or similar device, squirt in a repair adhesive, between wood grain and sheet metal.

(4) Utilizing a plastic squeegee, pressurize all of the repair area with firm, overlapping strokes to remove all air bubbles and wrinkles, and to assure a good adhesive bond.

REPAIR OF MINOR DAMAGE TO THE BASE WOOD GRAIN FILM

(1) To repair small mutilations in film not larger than .04 square inches (approximately 1/8 in. x 1/4 in.) apply Air Dry Repair Touch-up Paints, **using a touch-up brush only.** The light colored paint should be applied first and then the dark colored paint.

(2) After all color repair is completed apply an Air Dry Repair Clean Enamel Top Coat, **using a touch-up brush. Minimum film thickness shall be .001 inch.**

(3) Air dry at room temperature.

REPAIR OF MINOR SCRATCHES IN THE CLEAR TOP COAT

(1) To repair light surface scratches and nicks in clear coating, lightly sand and feather-out area to be repaired with 400 grit sandpaper.

Caution must be taken during sanding operation. If base printed woodgrain film is damaged during sanding, entire applique must be replaced.

(2) Wipe off surface with a clean rag dampened with a clean solvent such as Naphtha, isopropyl alcohol, heptane or equivalent.

(3) Use tack rags to remove all dirt and lint from sanded surfaces.

(4) Using a touch-up brush, **apply an Air Dry Repair Clear Enamel Top Coat,** Minimum film thickness shall be .001 inch.

(5) Air dry at room temperature.

MyMopar.com

SEALING

INDEX

	Page
APPLICATION	
Method Of Applying Sealers	2
CHALLENGER	
Dash Panel	11
Door-Deck Lid	12
Front Pillar	13
Quarter Panel	11
Underbody	10
Upper Dash Panel-Cowl Top	9
Roof Rail	13
CORONET	
Floor Pan To Dash-Rear Floor Pan-Cowl-Sill	12
Front Fender (Station Wagon)	2
Front Fender (2 dr. Hardtop)	11
Inside Quarter Panel (Hardtop)	11
Pillar Sealing Area (Station Wagon)	8
Quarter Panel To Pillar (Hardtop)	11
Quarter Panel Sealing	7
Roof Rail Area Sealing	5
Rear Floor Pan (Station Wagon)	6
Tire Well Area	6
DART	
Deck Lid	15
Floor Pan	14
Pillar	15
Quarter Panel (Inside)	11
Quarter Panel (Outside)	15
Roof Rail	14
Wheelhouse-Belt Bar	15
DODGE	
Dash Panel Inside Area	2
Pillar Area	5
Quarter Panel-Inside	2
Quarter Window Area (Station Wagon)	3
Underbody Area	4
Tire Well And Floor Pan (Station Wagon)	3
GENERAL INFORMATION	1
PURPOSE OF SEALERS	1
SEALERS AND COMPOUNDS	2
Body Seam Sealer (External)	2
Heavy Sealing Putty (Internal)	2
Super Rubber Cement	2
Windshield Rubber Seals	2
TESTING	1
Powder Method	1
Water Method	1

GENERAL INFORMATION

The procedures for weatherstrip sealing and replacement are incorporated with the procedures of the component unit.

The sealing illustrations used in this unit show the area sealed during manufacture of the vehicle. These areas should be considered when testing for leaks.

For added information to sealing windnoise and air leaks, see Master Technican Service Conferance issue 70-7.

PURPOSE OF SEALERS

Sealers are used to close openings in the body metal structure to prevent water, dust, noise and fumes entering the body. In order to accomplish this purpose they must be used in the locations and manner described in (Fig. 1). Careful consideration has been given to all sealing problems. The importance of sealing becomes obvious when it is realized that a vehicle in motion creates an increased pressure on body exterior and with windows closed establishes an interior pressure lower than atmospheric pressure. This causes air to be drawn into the body interior from all body surfaces where openings exist.

SERVICE PROCEDURES

TESTING

Water Method

Normally a visual inspection of an area will indicate the area for sealing. When testing with water, use a spray simulating rain or a garden hose without the nozzle and regulate the pressure to an approximate 3 inch stream. All water tests must be made starting at the bottom of the door opening or weatherstrip and slowly moving up the joint, seam or suspected area.

Powder Method

To test the sealing between the body and the weatherstrips, it is advisable to use trace powder and a test bulb. When the powder is sprayed at the point where a leak is suspected it will leave a trace line through the point of leakage.

In hard to reach points, such as the dog leg at the "A" post, blue carpenter's chalk applied to the weatherstrip will transfer to the "A" post when the door is closed if a good contact exists.

MyMopar.com

SEALERS AND COMPOUNDS

Super Rubber Cement — May be used where a strong bonding of rubber parts to painted or unpainted steel surfaces is desired, attachment of weatherstrip on doors and luggage compartment lid or for attachment of felt pads.

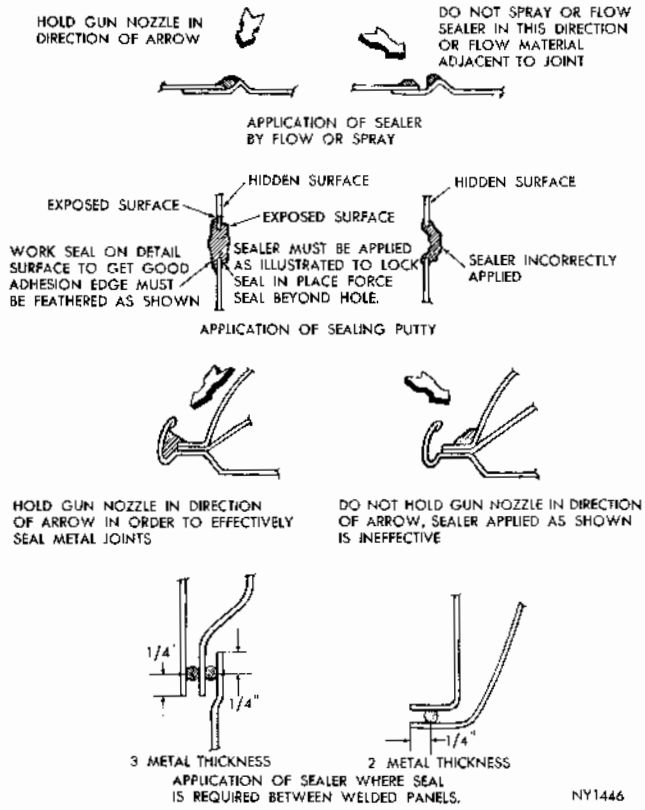

Fig. 1 Methods Of Applying Sealer

Windshield Rubber Seals — A heavy viscosity, rubber expander. Sealer can be used where rubber is confined between a glass and metal channel, such as on the windshield and rear window glass assembled in one-piece type weatehrstrips. Sealer will not harm paint or chrome finish and can easily be removed with a cloth before it sets.

Body Seam Sealers — (For External Sealing) along welded joints, exterior roof rails, exterior belt lines, B-post welds, weatherstrips and floor seams. Upon drying, the sealer forms a tough skin which can be painted with a touch-up brush.

Heavy Sealing Putty (For Interior Sealing) — A heavy, fibrous, putty-like compound, which can be formed or rolled into pellets or long string shapes.

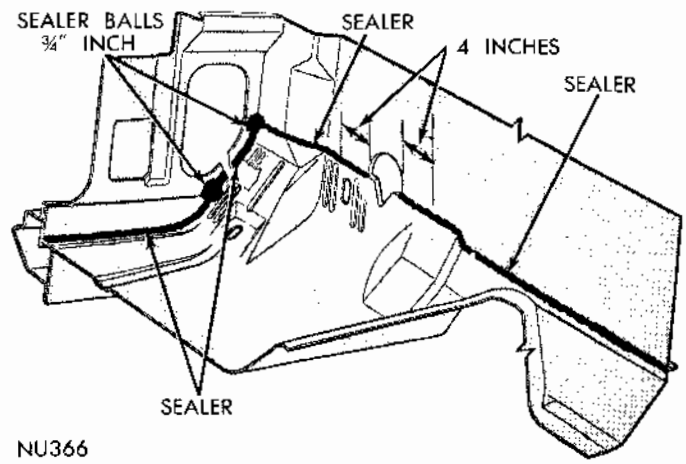

Fig. 2 Dash Panel Inside Area - (Dodge)

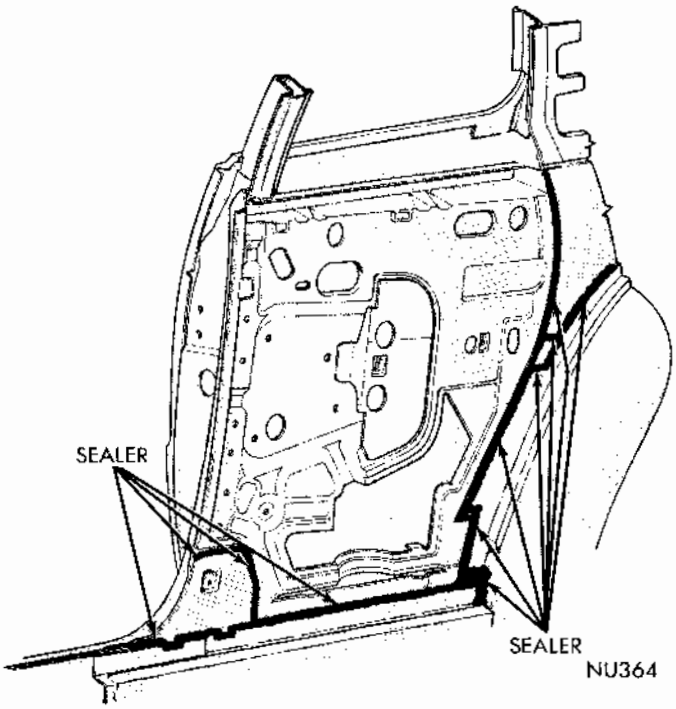

Fig. 3 Quarter Inside Panel (Dodge)

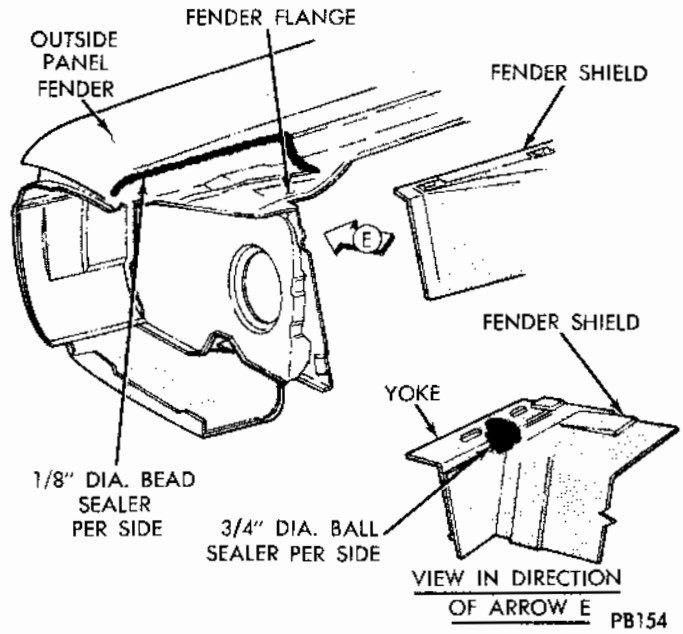

Fig. 4 Front Fender (Coronet Station Wagon)

MyMopar.com

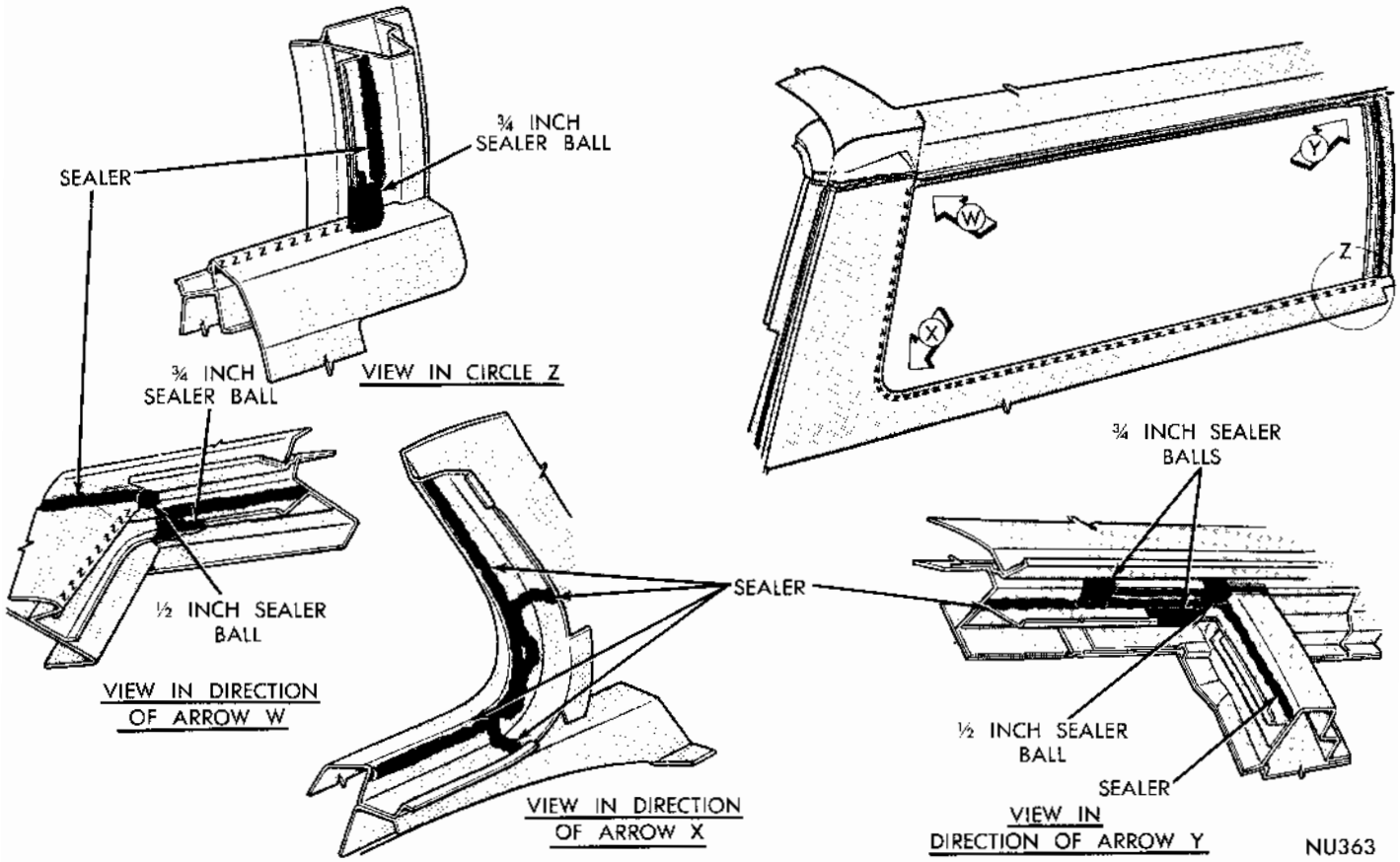

Fig. 5 Quarter Window Area (Station Wagon) (Dodge)

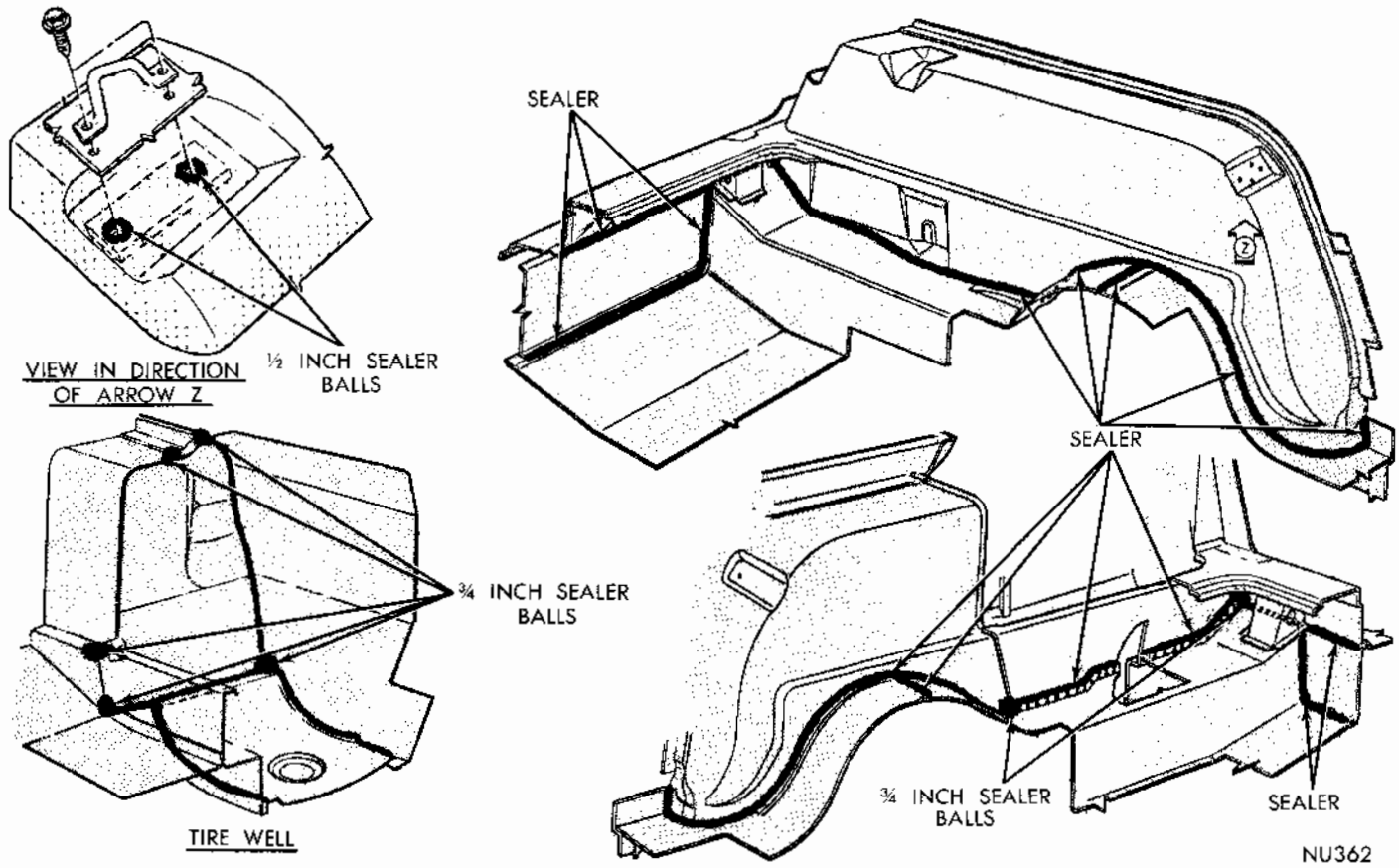

Fig. 6 Tire Well And Floor Pan (Station Wagon) (Dodge)

MyMopar.com

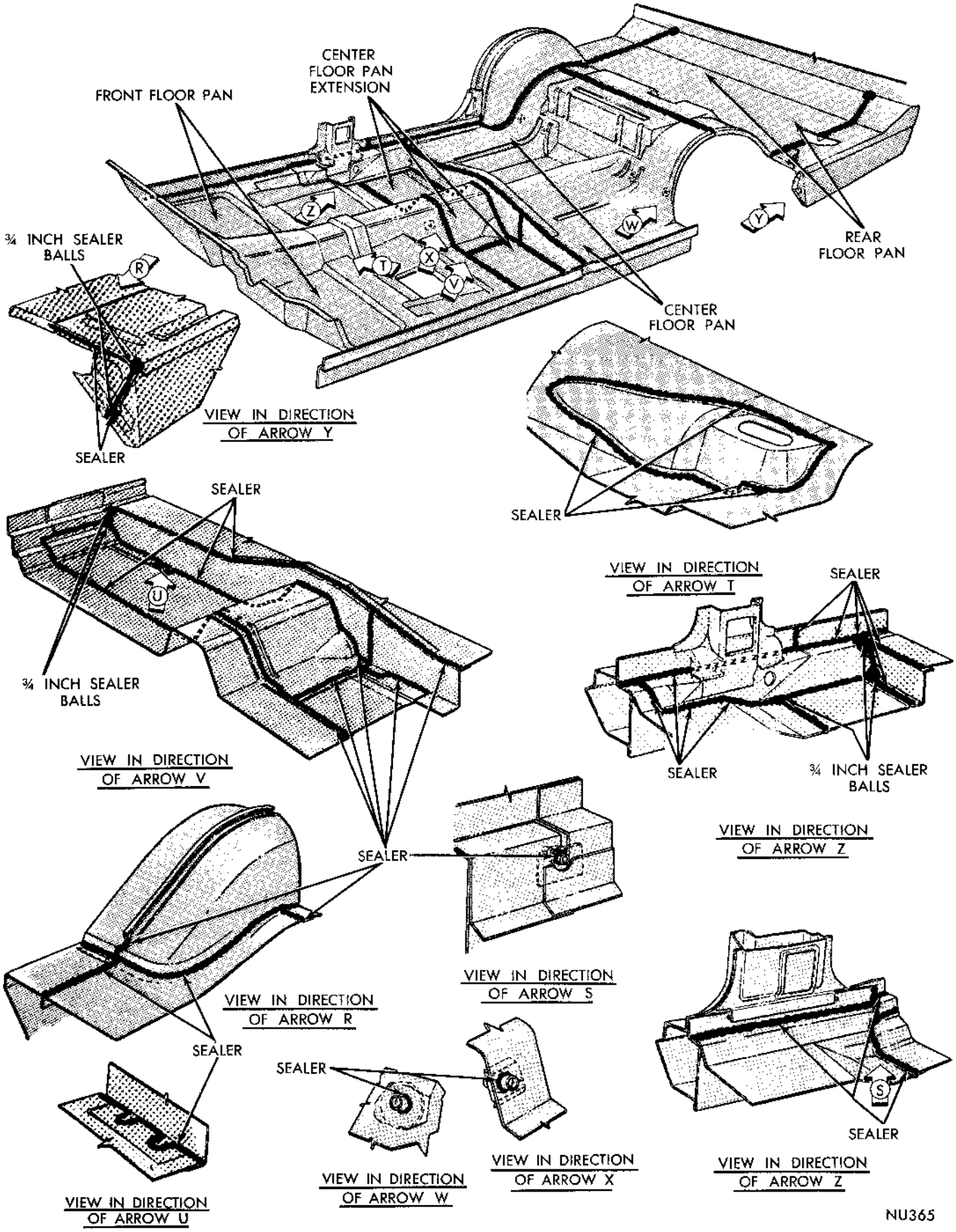

Fig. 7 Underbody Area (Dodge)

MyMopar.com

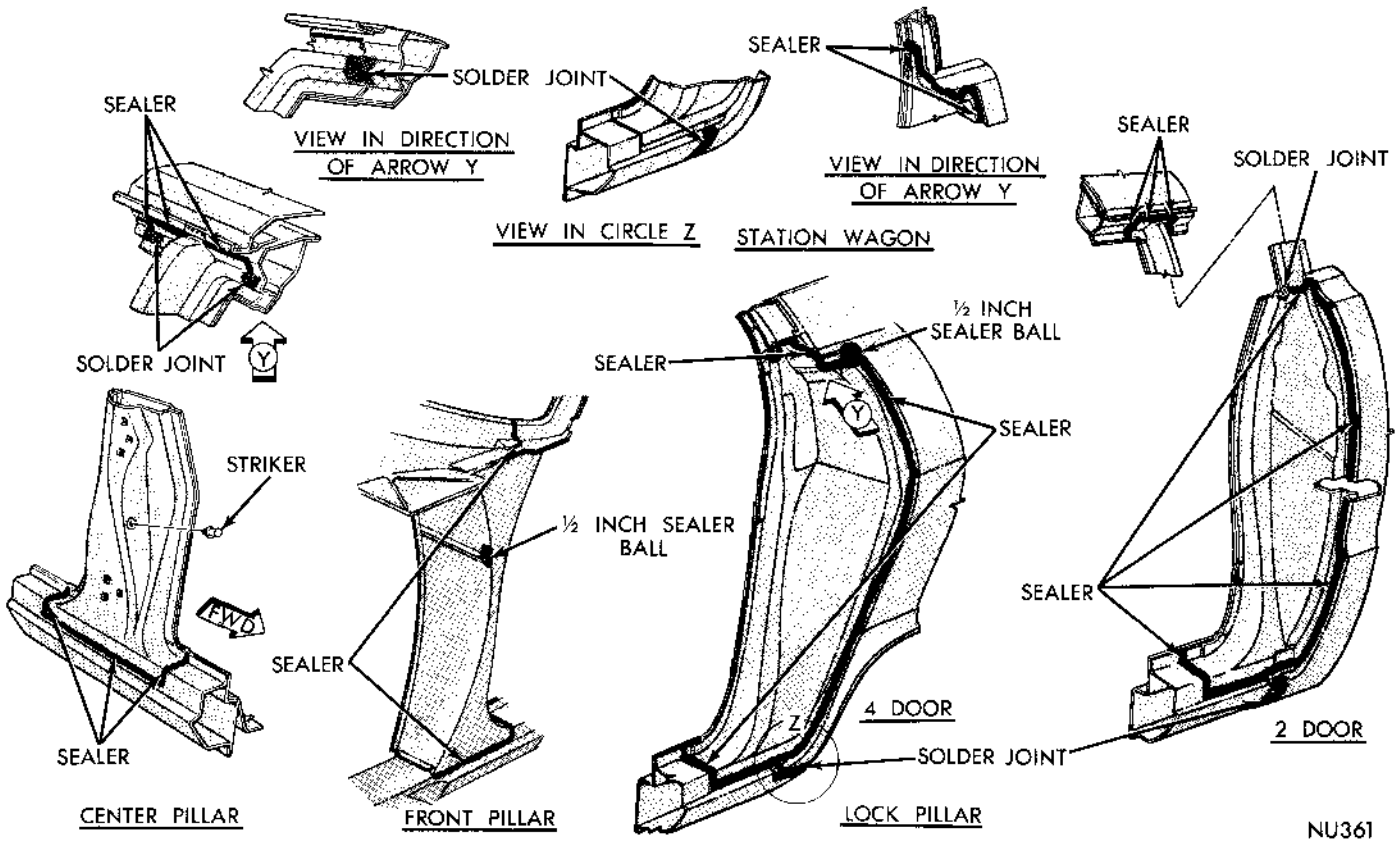

Fig. 8 Pillar Area (Dodge)

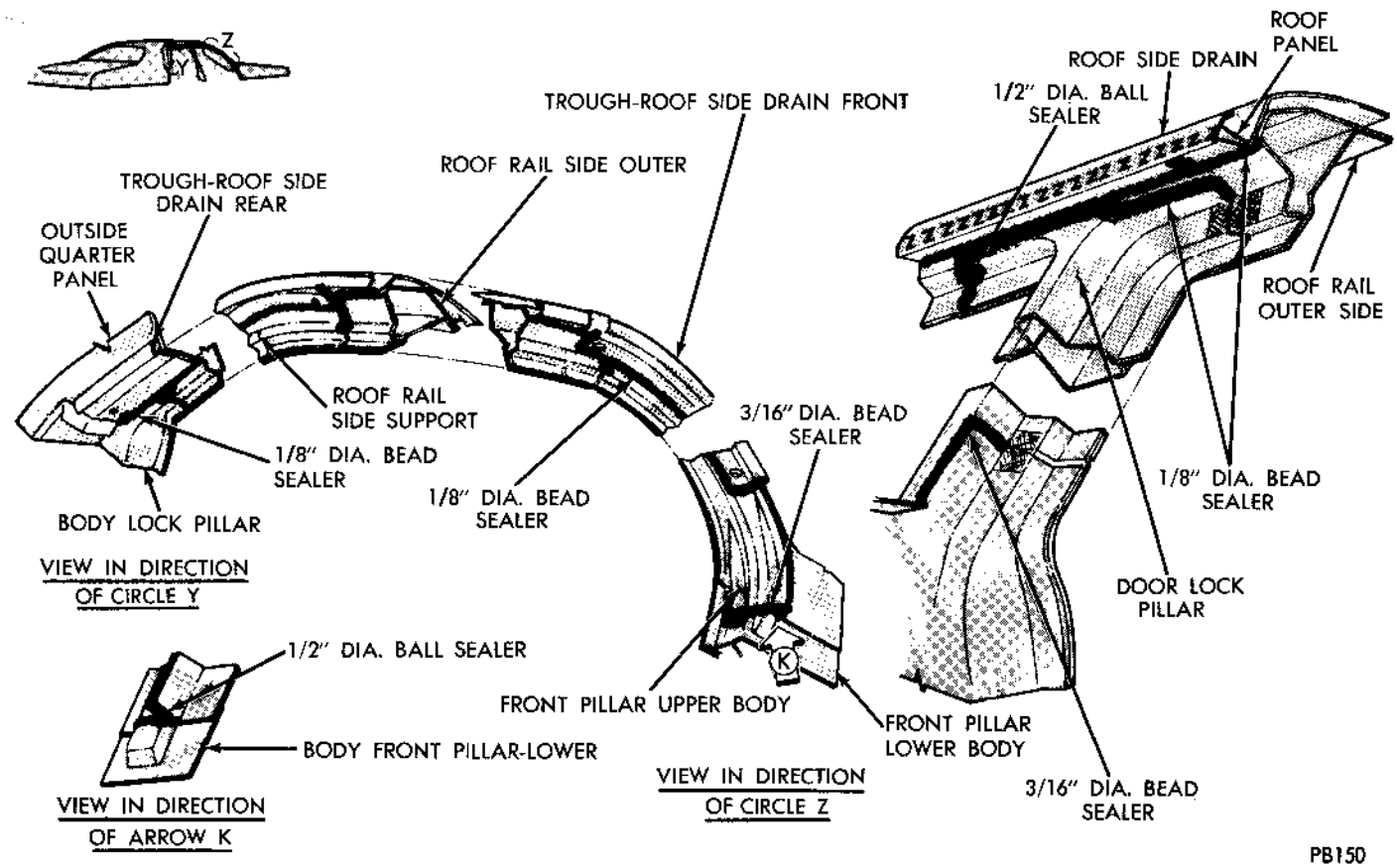

Fig. 9 Roof Rail Area Sealing (Coronet)

MyMopar.com

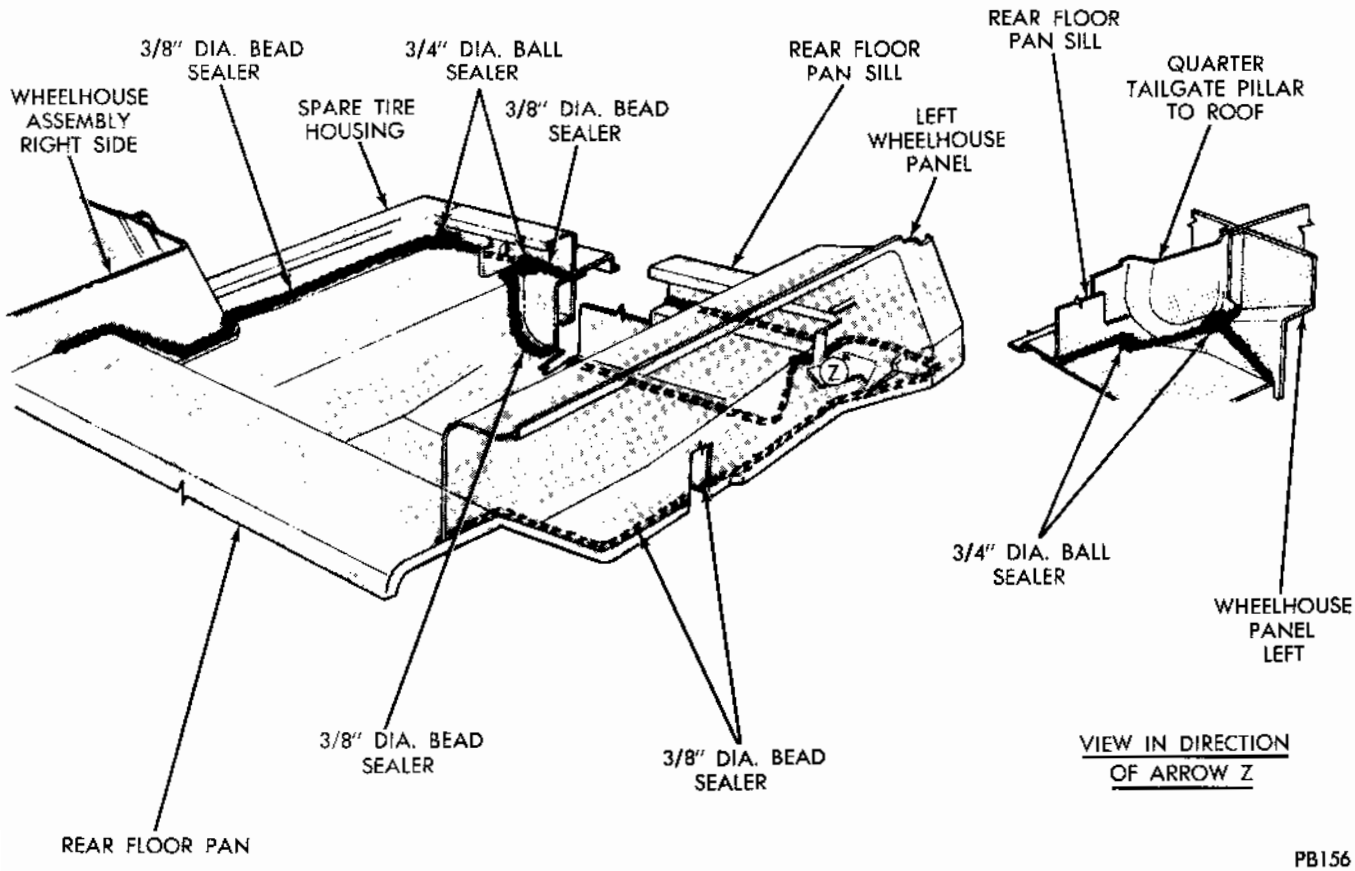

Fig. 10 Rear Floor Pan (Station Wagon) (Coronet)

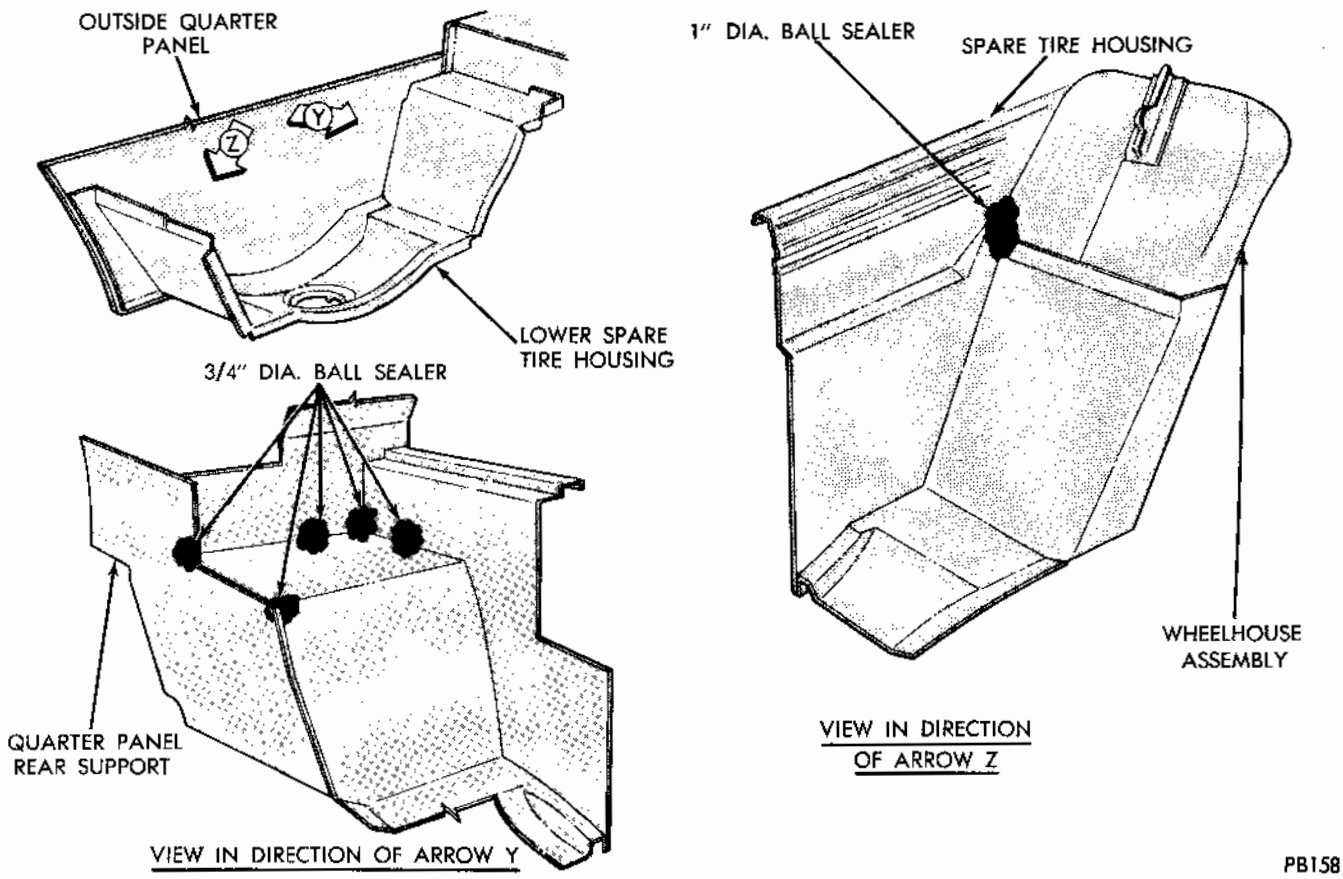

Fig. 11 Tire Well Area (Coronet)

MyMopar.com

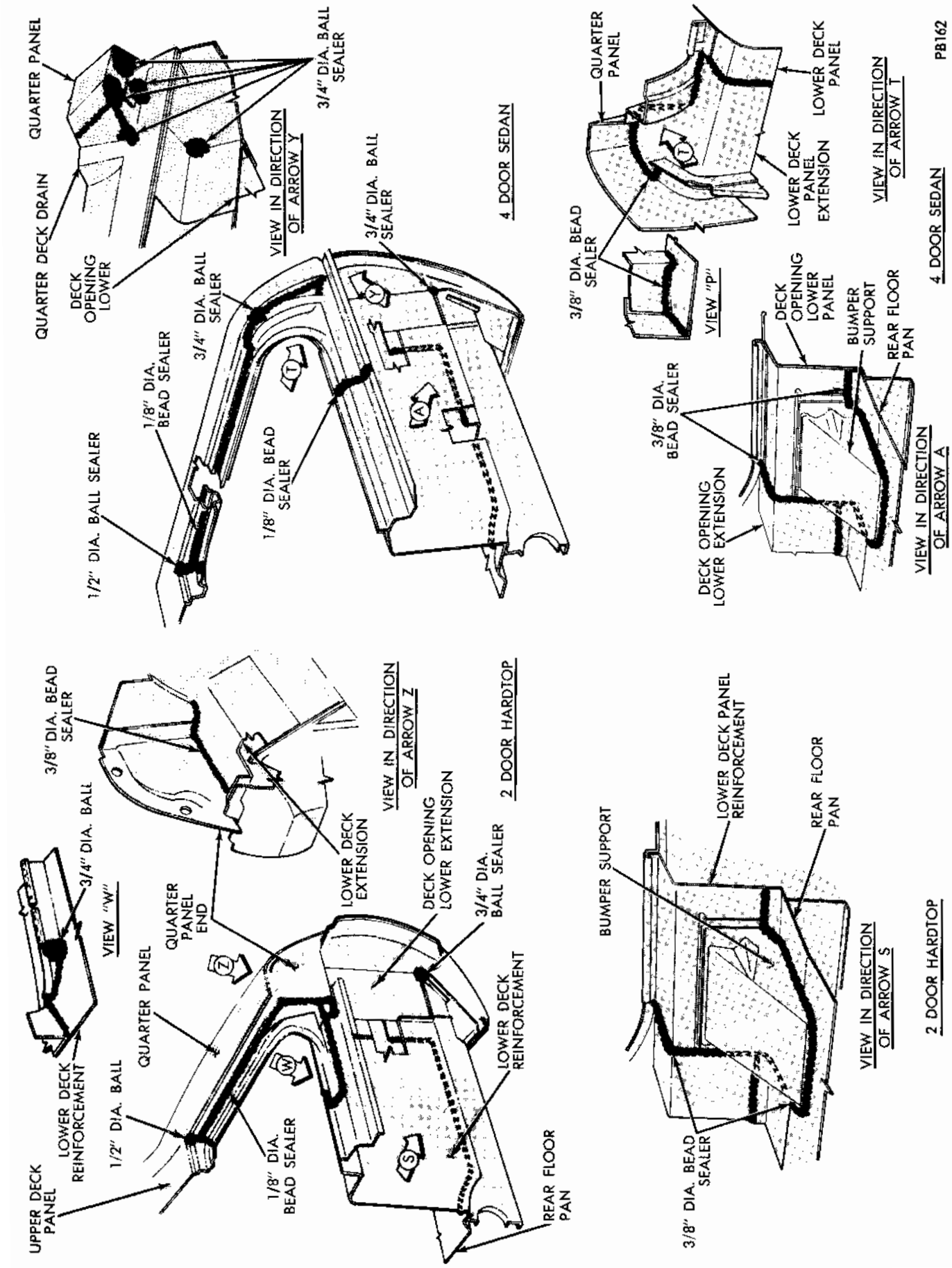

Fig. 12 Quarter Panel Sealing Area (Coronet)

MyMopar.com

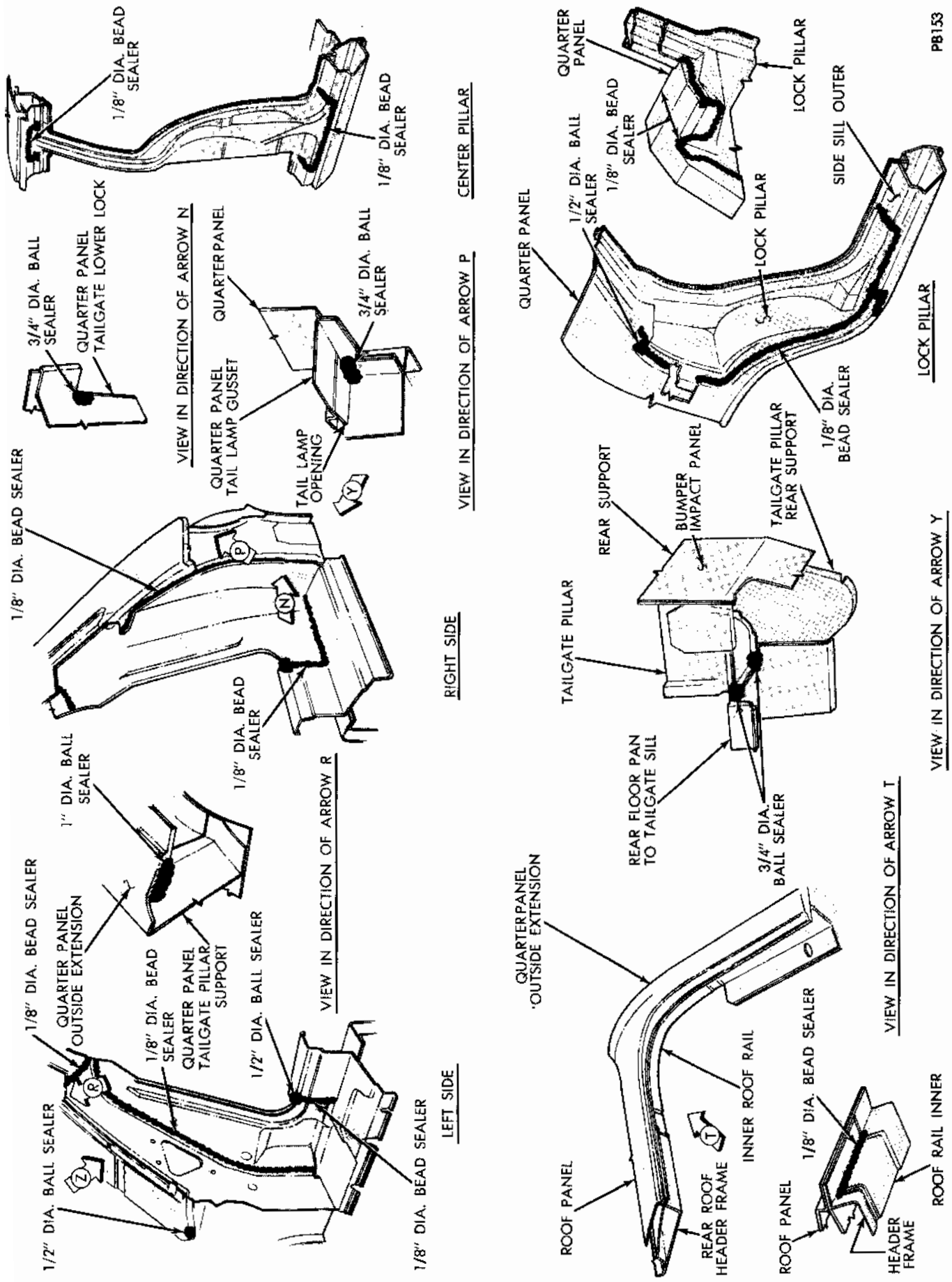

Fig. 13 Pillar Sealing Area (Station Wagon) (Coronet)

MyMopar.com

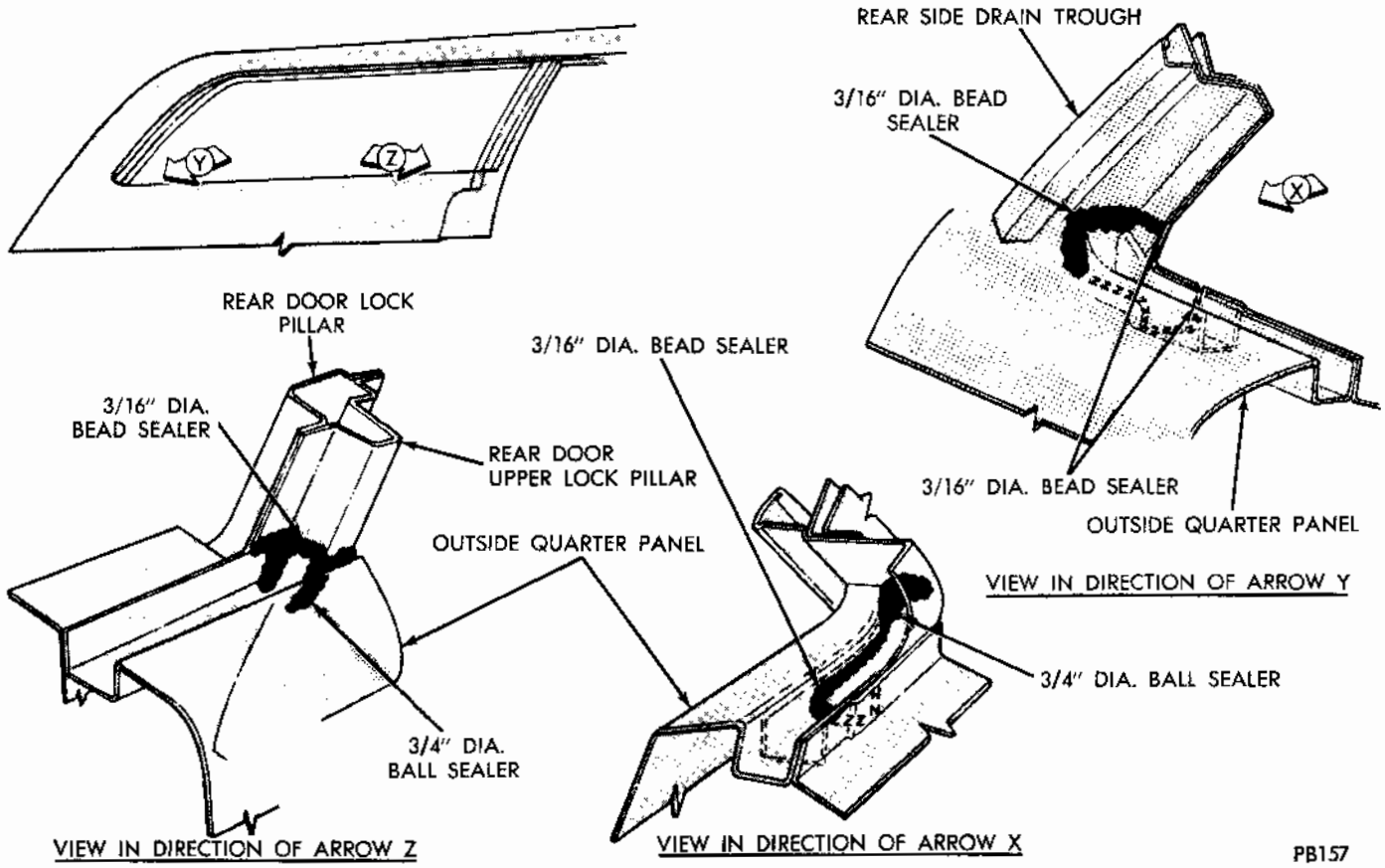

Fig. 14 Quarter Window (Station Wagon) (Coronet)

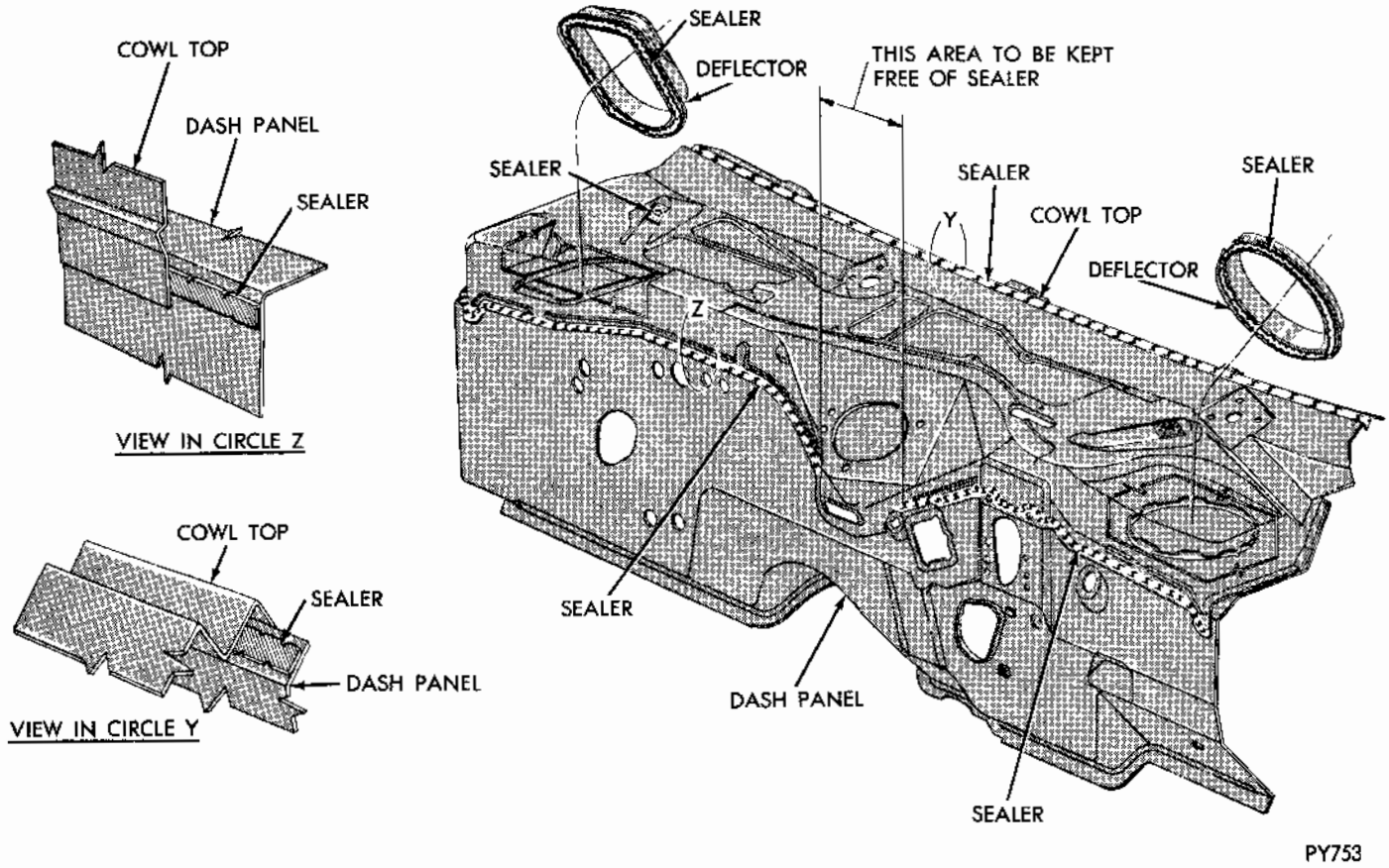

Fig. 15 Upper Dash Panel And Cowl Top Area - Challenger

MyMopar.com

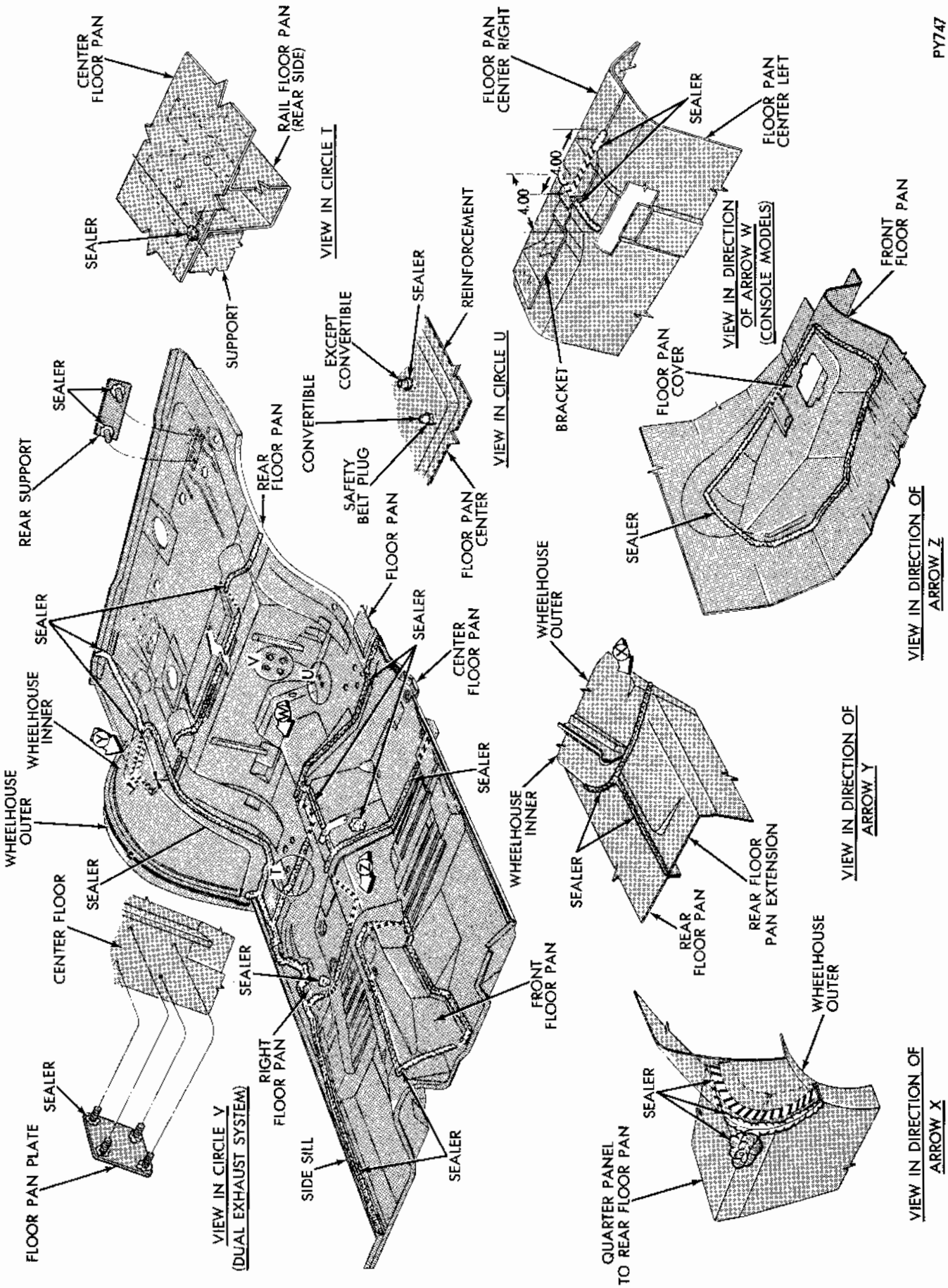

Fig. 16 Underbody Area - Challenger

MyMopar.com

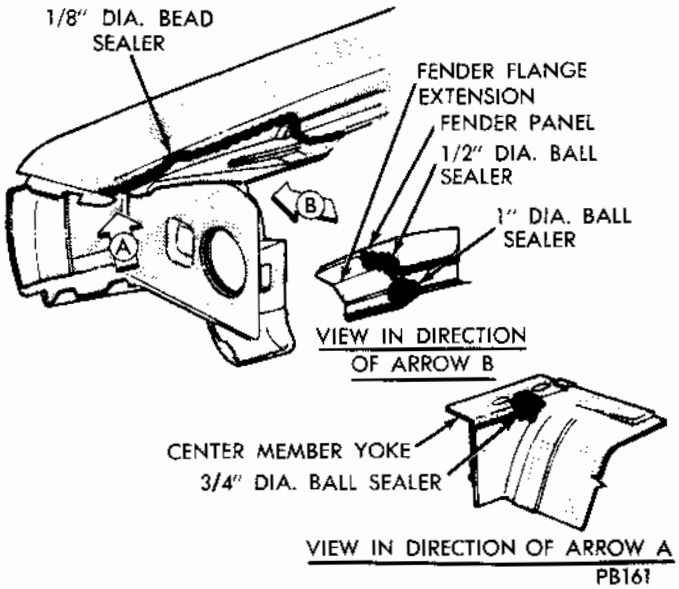

Fig. 17 Front Fender (Coronet 2dr. Hardtop)

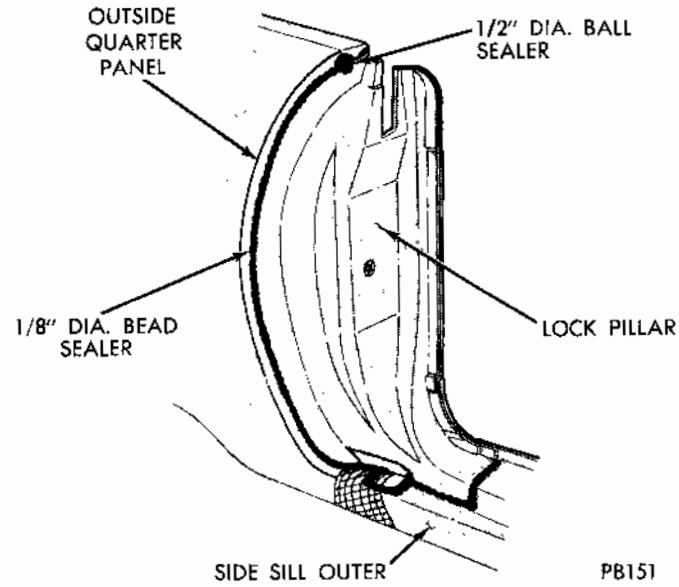

Fig. 18 Quarter Panel To Pillar (Hardtop) (Coronet)

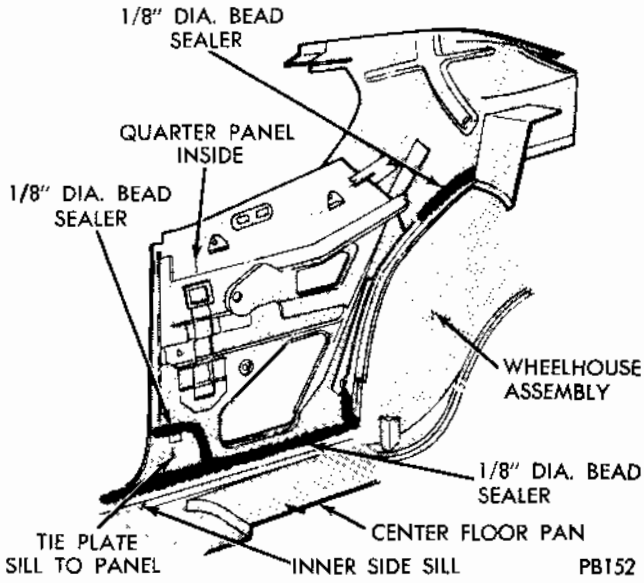

Fig. 19 Inside Quarter Panel (Hardtop) (Coronet)

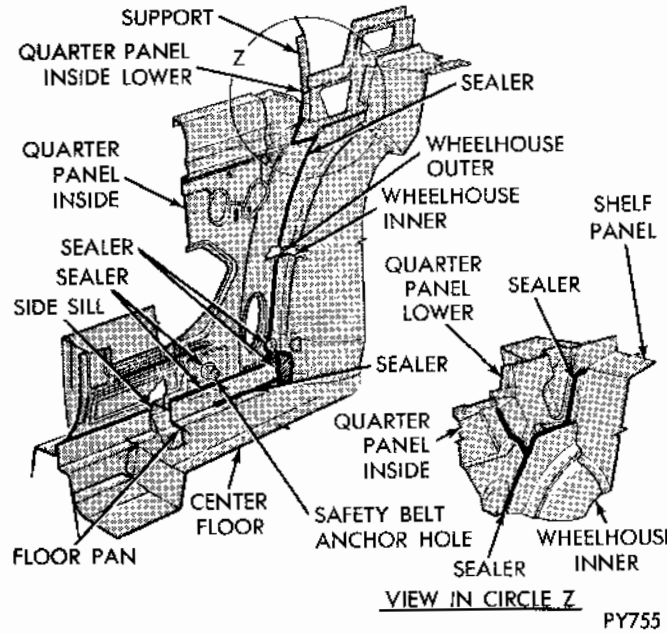

Fig. 20 Quarter Panel Area (Inside) - Dart

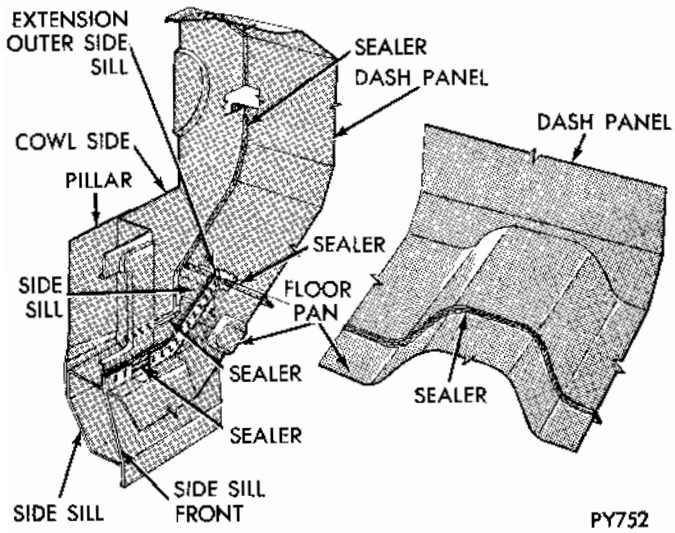

Fig. 21 Dash Panel Area-Challenger

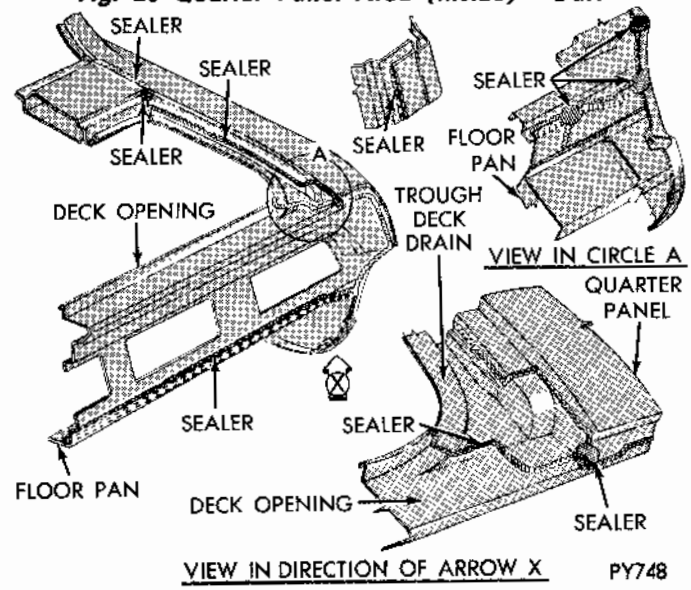

Fig. 22 Quarter Panel Area-Challenger

MyMopar.com

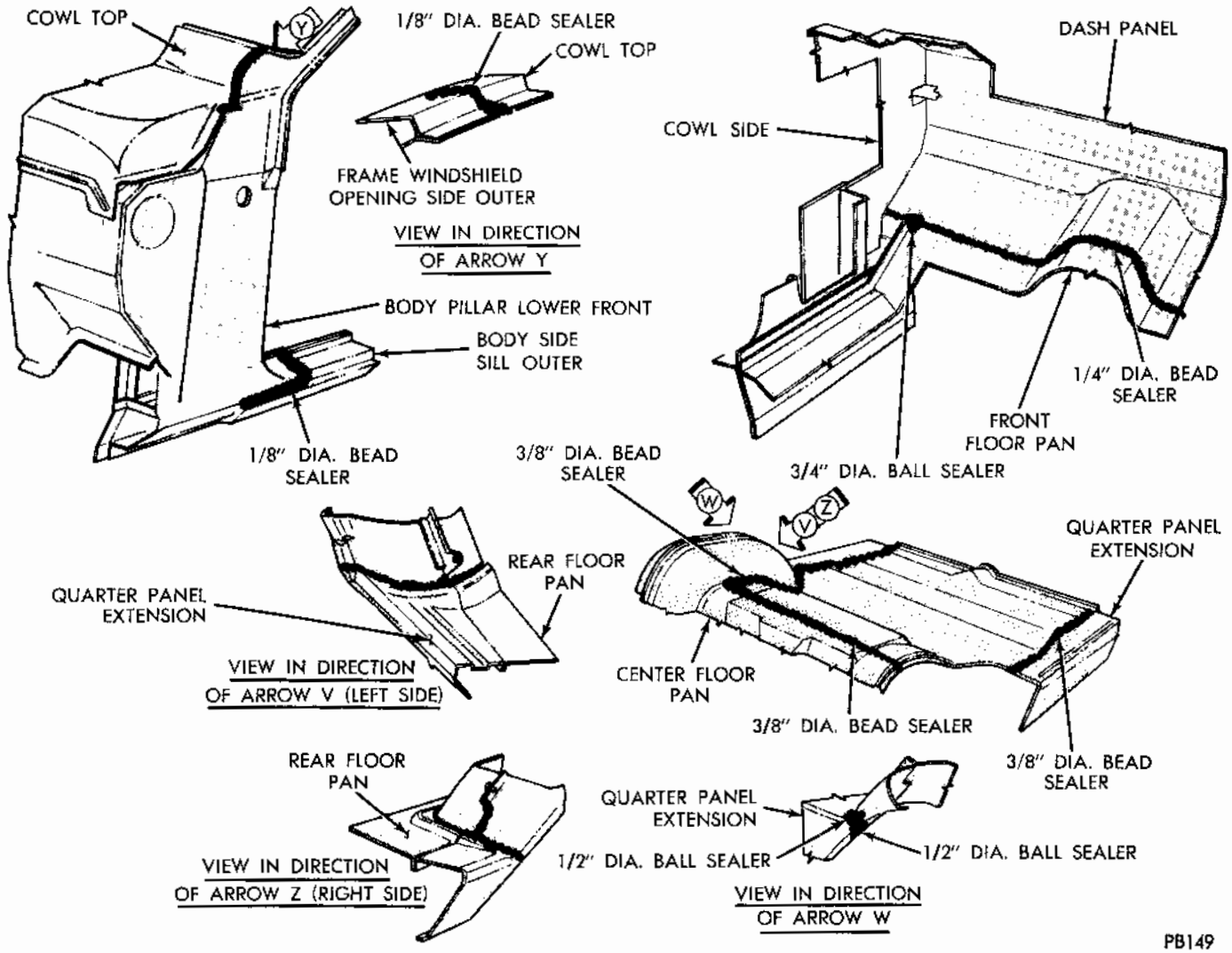

Fig. 23 Floor Pan To Dash-Rear Floor Pan-Cowl And Sill Area (Coronet)

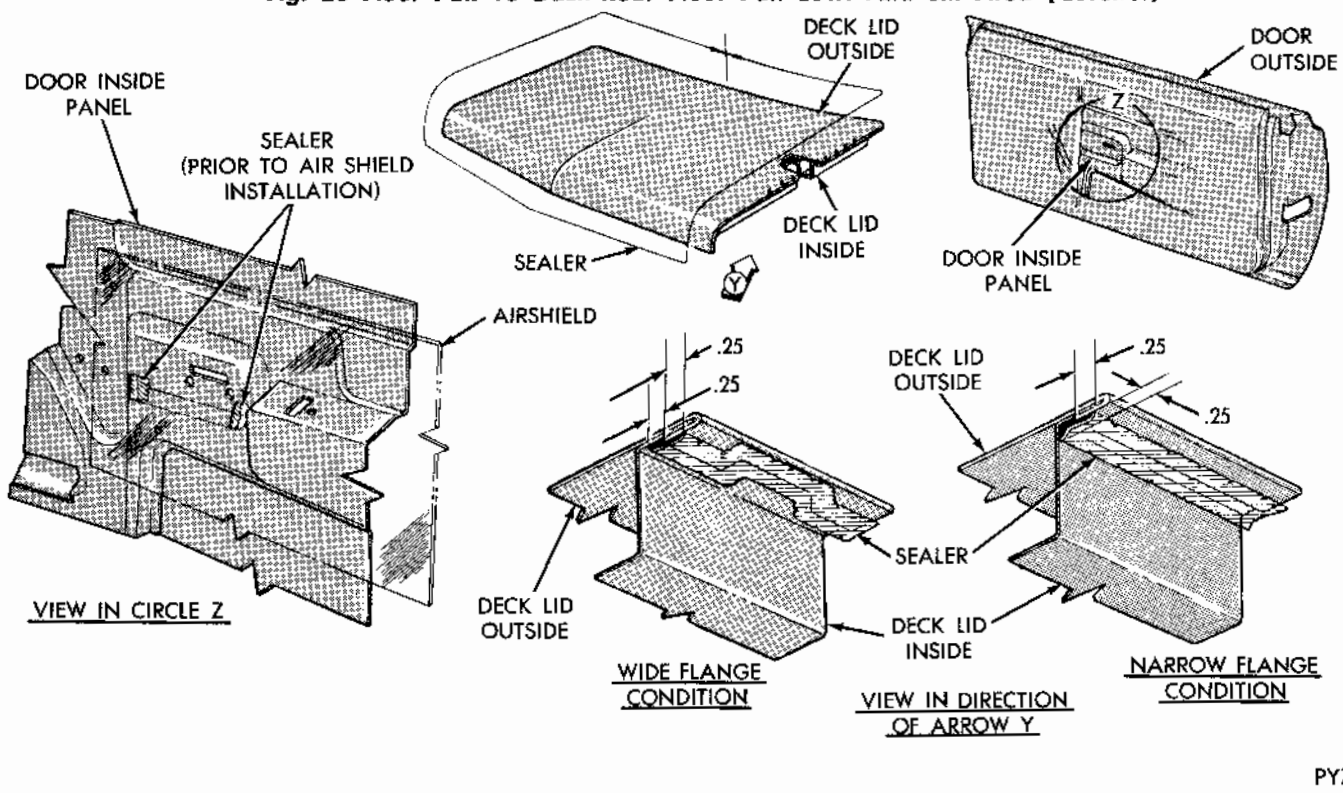

Fig. 24 Door And Deck Lid Area- Challenger

MyMopar.com

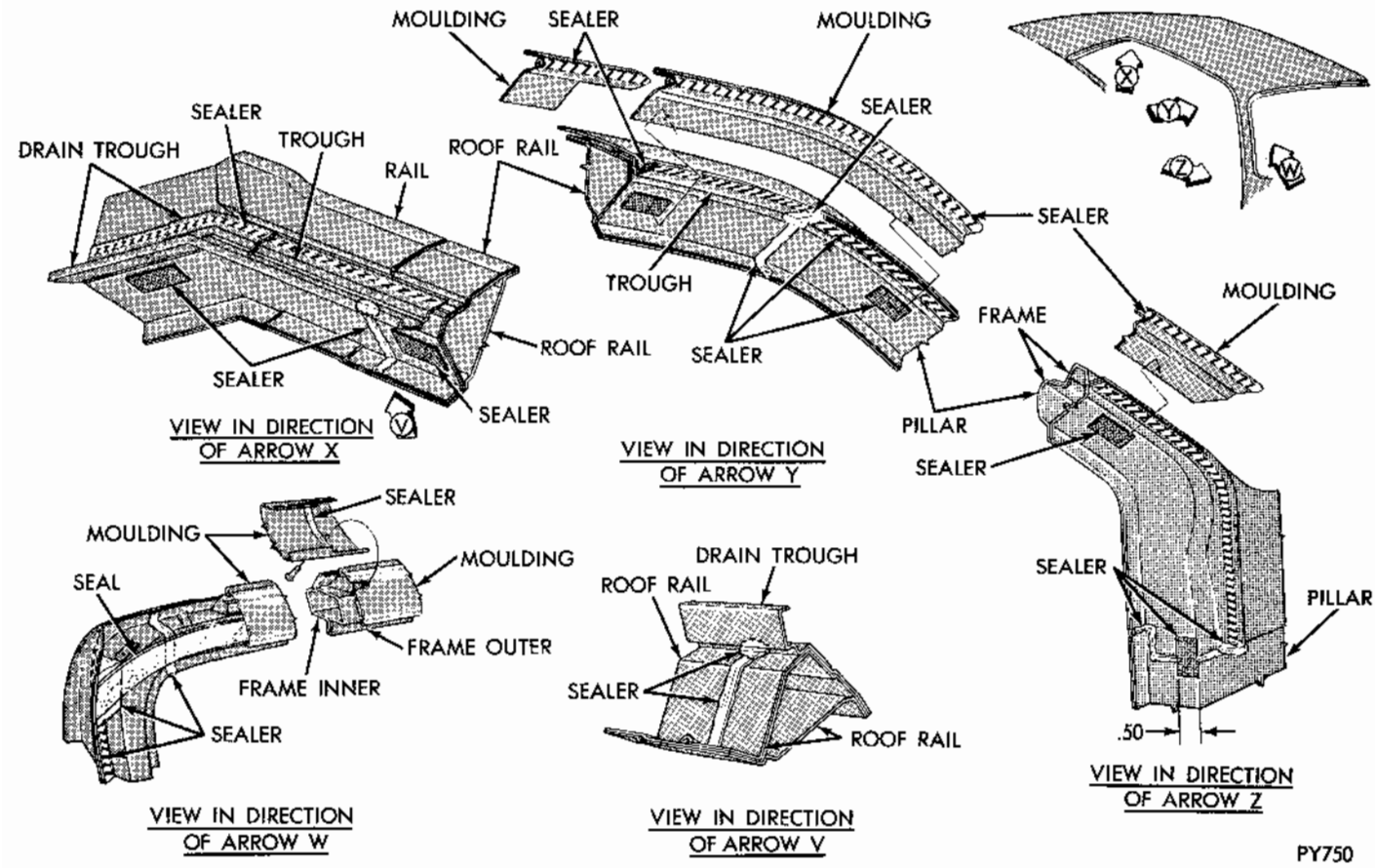

Fig. 25 Roof Rail Area-Challenger

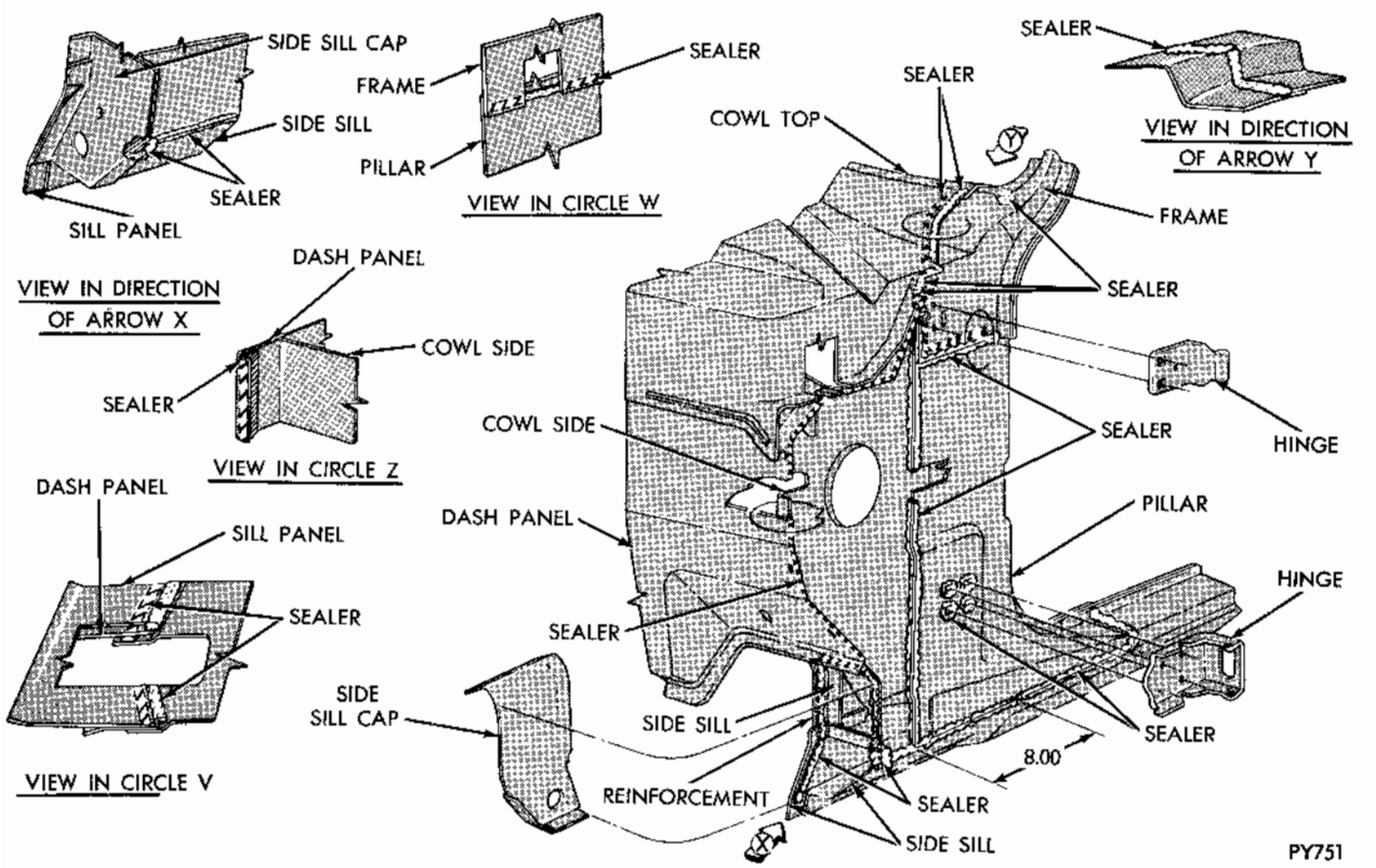

Fig. 26 Front Pillar - Challenger

MyMopar.com

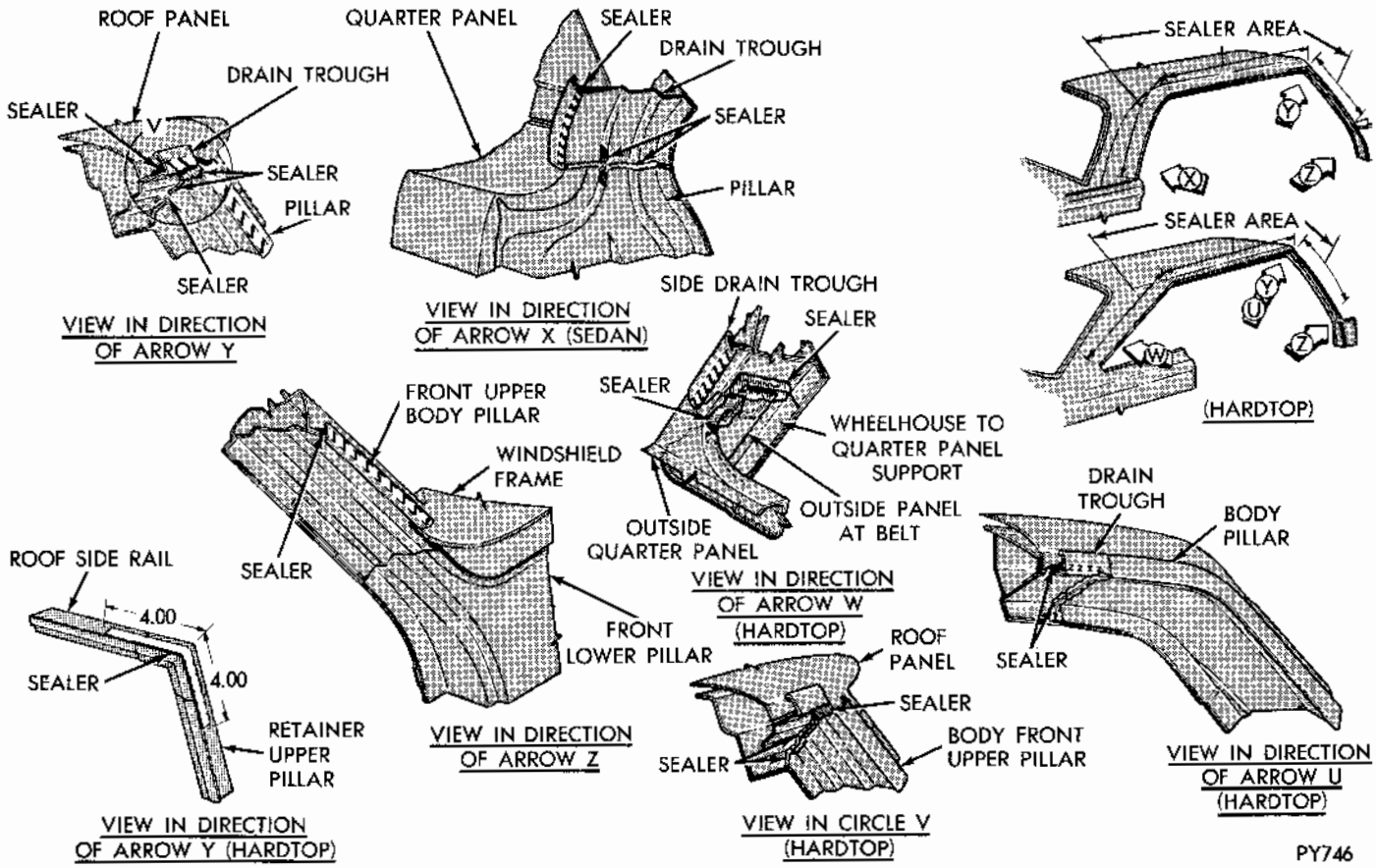

Fig. 27 Roof Rail Area-Dart

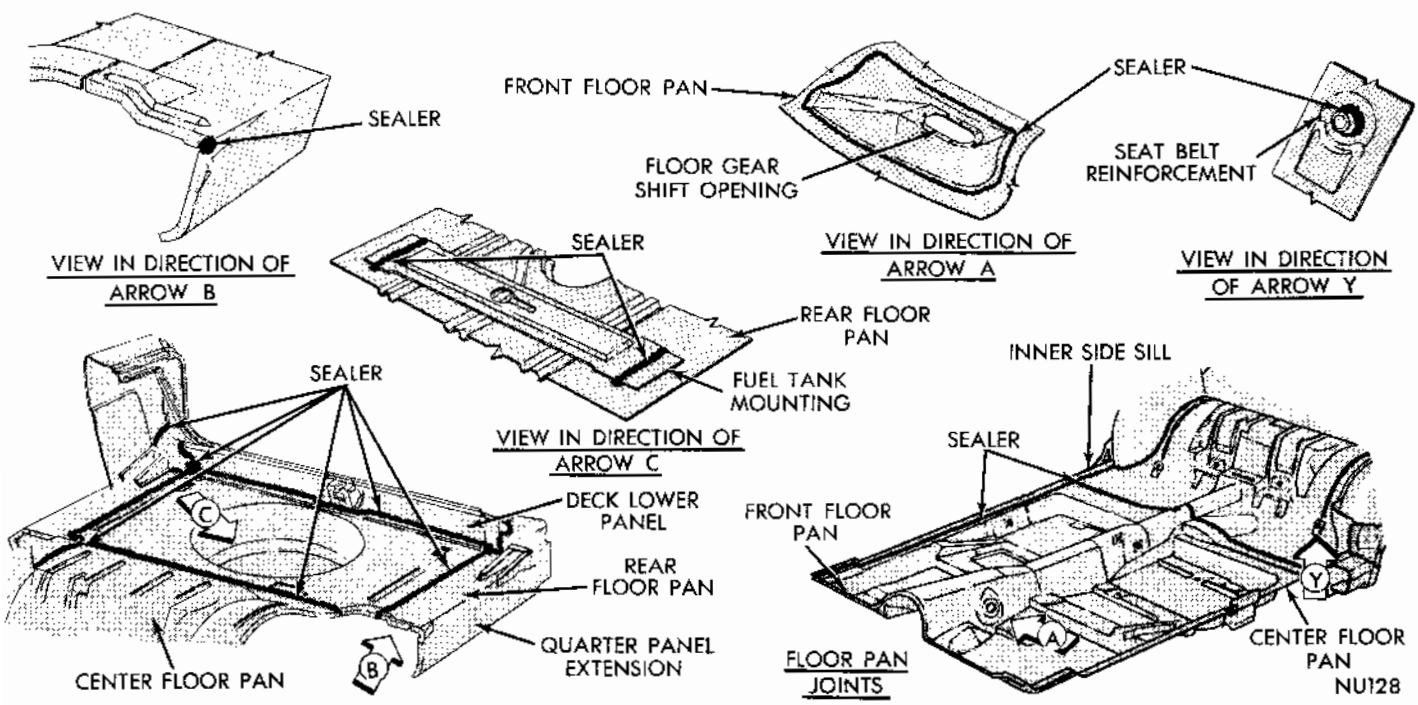

Fig. 28 Floor Pan Area-Dart

MyMopar.com

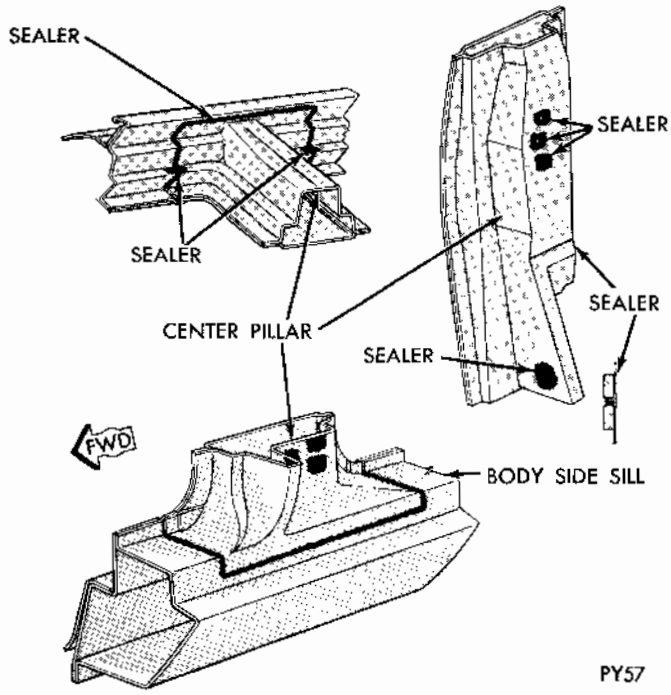

Fig. 29 Pillar Area-Dart

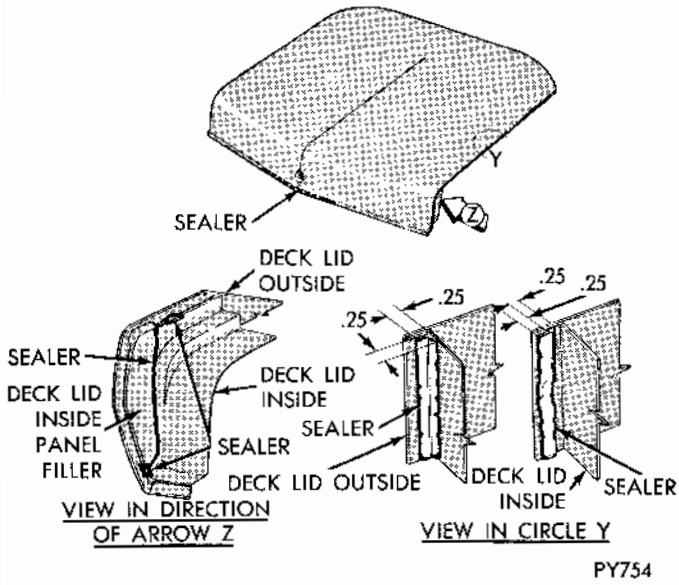

Fig. 31 Deck Lid - Dart

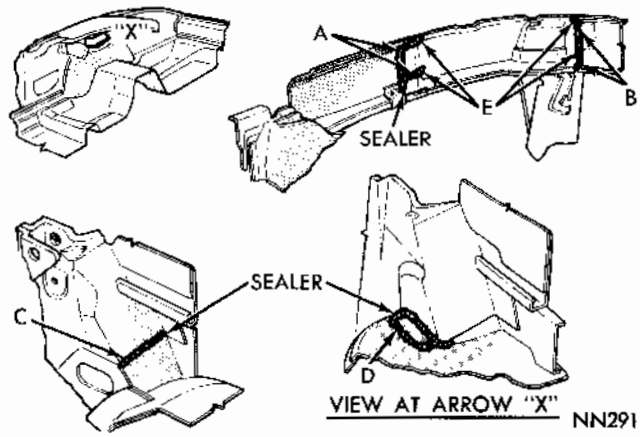

Fig. 30 Wheelhouse And Belt Bar-Dart

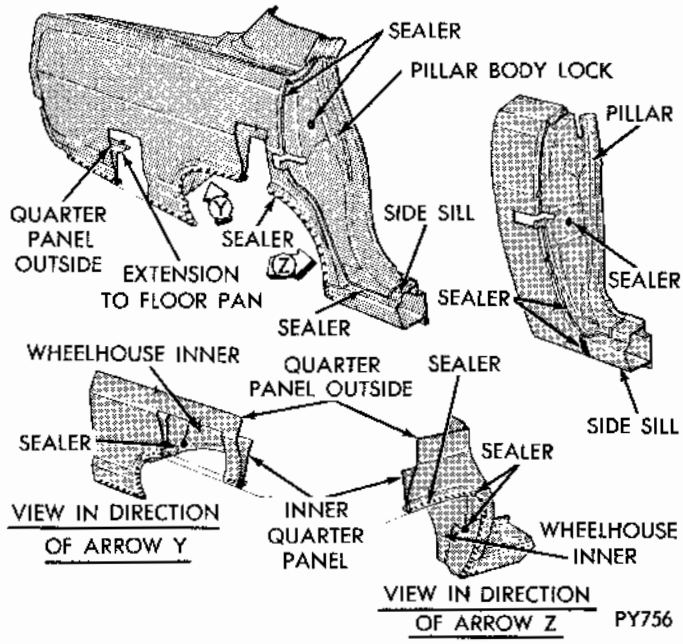

Fig. 32 Quarter Panel Area (Outside)- Dart

MyMopar.com

REFINISHING PROCEDURES

INDEX

	Page
Acrylic Finishes	1
Definitions—Technical Terms	1
Galvanized Metals	2
Paint Charts	3
Polishing and Buffing	2
Refinishing	2
Spot Repairs	3
Rust Protection	2

ACRYLIC FINISHES

Vehicles are finished in an acrylic enamel. To determine correct color and part number of enamel used on the car, refer to code on body number plate and then locate corresponding code on paint chart.

DEFINITIONS OF TECHNICAL TERMS

Coat—Single

This means one coat overlapping to give complete coverage.

Coat—Double

A double coat means to first spray a singel coat with vertical strokes and then across with horizontal strokes, or vice versa.

Drying

Drying or hardening of a film goes through several stages. First is known as "dust-free" and is the time required for a film to reach the condition where, if any dust settles on it, dust will not become imbedded, but may be wiped off after film has hardened. Second stage is known as "tack-free" and is the time required for a film to reach the condition where it may be touched with light pressure of finger. Third is "hard-dry" and is the time required for film to become thoroughly hard so that it may be rubbed and polished.

Feather-Edging

This is tapering of edges of a finish so that when a finger is passed over it no break will be felt. Feather-edging is usually done with water and sandpaper on a sanding block.

Ferrous and Non-Ferrous Metals

Ferrous metals are those which are made from iron (steel). Non-ferrous metals are those which are not made from iron or do not present an iron (steel) surface, such as aluminum, aluminum alloys, brass, copper and magnesium.

Flash

This is the term applied to a coat of a product when enough of the solvent has passed off for recoating.

Mist Coat

This is a coat of thinner to which may be added a small amount of retarder and applied as a final coat to increase flow and lustre of lacquer-type finishes.

Priming

The function of a primer is to form a bond between the surface and the succeeding product.

Puttying

A glazing putty is used for filling in small imperfections which are too deep to be taken care of by surfacer coats. It may be applied either before or after the last coat of surfacer.

Reducers

Reducers are mixtures of volatile liquids used to reduce alkyd, synthetic and orthodox materials to the proper consistency for application.

Sanding Block

As a rule a sanding block is a flexible rubber block, so arranged sandpaper may be fastened to it securely. It offers a good grip for the operator.

Wherever possible sanding should be done with a block as it distributes the pressures and gives a more uniform surface.

Surfacing

The function of a surfacer is to prepare a smooth surface for the color coats.

Tack Rag

This is a piece of cheesecloth that has been dipped in thin, non-drying varnish and then wrung out. It is kept in a container so that varnish will not harden but will remain tacky. Tack rag is used to wipe off a surface or remove dust.

Thinners

Thinners are mixtures of volatile liquids used to thin lacquer type finishing materials to proper consistency for application.

MyMopar.com

Undercoats

All products used to prepare surface to receive color coats are classified as undercoats, such as primers, surfacers, putties, primer surfacers, and sealers.

PAINT REPAIRS ON GALVANIZED METALS

To perform paint repairs on galvanized rocker panels or any other galvanized steel surfaces, care must be exercised when preparing bare galvanized surface to properly accept primer surfacer and finish paint. Do not use short cut methods nor inter mixing of materials.

Metal Preparation

(1) Thoroughly sand affected area to remove all corrosion products from exposed metal surface while carefully feathering all paint edges.

(2) Wire brush or steel wool entire metal surface and remove all grease or oil by wiping with MOPAR MOPREP X11 or equivalent.

(3) Treat bare metal panel with MOPAR PREP X12 or equivalent according to label directions.

(4) Rinse with clean water and blow off with compressed air.

Refinishing

(1) Apply one light coat of MOPAR Zinc Chromatic Primer L38 or equivalent. And as soon as thinner flashes off and within 30 minutes, apply a coat of MOPAR Acrylic Sealer G40, or equivalent.

(2) Apply MOPAR MOPRIME Primer Surfacer G37 Gray, G38 Red, G39 Neutral Gray or equivalent.

(3) Sand when dry and proceed with application of finish coats according to paint manufactureres recommendations.

RUST PROTECTION

Prior to applying any paint to the sheet metal clean the area to be repainted with MOPAR MOPREP X11 or equivalent. Eliminate allFingerprints. Chemically treat all bare metal using MOPAR METAL PREP X12 or equivalent. This conditions the exposed metal to resist rust.

BUFFING AND POLISHING

Minor imperfections in paint finish normally can be removed by sanding, buffing and polishing. Following procedure should be used when working on these minor conditions:

(1) Wet sand by hand affected area using 600 paper which has been soaked in mineral spirits. **Caution should be used not to rub too hard over any of the affected areas or on ridges.**

(2) Tack off area with a clean, soft cloth.

(3) Buff entire area using a fine buffing compound MOPAR X14 extra fast dry or X16, or equivalent.

REFINISHING

Preparation Acrylic System—Over Old Acrylic

(1) Remove outside accessories, mouldings and bumper face bars (if necessary).

(2) Remove silicone polish, wax, or any other surface contamination with wax and grease remover MOPREP X11 or equivalent. A chemically clean surface allows for effective sanding and assures adhesion of the undercoats and finish color.

(3) Sand old finish. This operation removed surface deterioration, feathers out scratches, nicks, stone bruises, or any other minor imperfections. Water sand with MOPAR Multi-Purpose 360 grit paper, part No. 1-1474 or its equivalent.

(4) Blow off entire car, using high pressure air to eliminate dirt or dust from blowing out on to surface as paint is applied.

(5) Mask off areas not to be painted. If a complete color change is being made, mask off interior parts adjacent to door openings to prevent paint spray from soiling interior trim and upholstering.

(6) Reclean entire area to be painted with wax and grease remover, MOPREP X11, or equivalent, eliminating workman's fingerprints.

(7) Chemically treat bare metal with MOPAR Metal Prep X12 or equivalent metal conditioner.

Priming the Surface

This operation is the backbone of foundation for finish color. It primes metal to insure adhesion and fills minor surface imperfections. Use one of recommended Mopar lacquer primer surfacers.

(8) Apply MOPAR Lacquer Primer Surfacer MO-Prime part No. G37 gray, G38 red, and G39 neutral gray or equivalent.

(9) To expedite repairs to other surface imperfections use MOPAR putties, Spot-Check G41 or 42 gray type, or G43 or 44 red type or equivalent.

(10) Sand undercoats. Water sand with MOPAR Multi-Purpose No. 400 paper, (part No. 1-1475) or finer paper (or its equivalent if other sanding methods or systems are employed). This is the key operation in refinishing. The finish will be as good as the foundation over which it is applied.

(11) Respray with MO Prime or equivalent primer surfacer any area that may have been sanded through to bare metal in step 10.

(12) Resand undercaot with MOPAR Multi Purpose grit No. 400 (Part No. 1-1475) or finer paper.

(13) When color is being changes, wash door

MyMopar.com

jambs and door opening areas. Spray interior.

(14) Remove overspray from exterior and reclean entire surface with MOPAR wax and grease remover MoPrep X11, or equivalent.

(15) Tack rag entire surface to remove lint and dust.

(16) Apply Chrysler Engineer Approved MOPAR Acrylic Lacquer Colors. (Four to six double coats) . Refinishing in field must be done with acrylic lacquer. Acrylic lacquer can be polished to match original finish gloss. Care must be exercised when selecting paint for refinishing Acrylic Metallics, to select the proper paint code.

(17) When colors have dried hard, compound and polish.

SPOT REPAIRS

The procedures for making spot repairs with acrylic lacquer are the same as for complete panel refinishing with the following exceptions:

Sealer Coats

The use of a sealer is not practical where a spot repair is demanded, as it is difficult to spray sealer without leaving an edge. If care is taken in preparation of surface, a satisfactory repair is possible by sanding the original finish about 2 or 3 inches beyond area where acrylic lacquer will be applied. Apply lacquer directly on sanded original finish, being careful not to overlap color on unsanded enamel.

Application of Color Coats

Metallic color can appear to vary in richness. Variation can be described as:

A closed pattern that appears lighter with fine metallic dispersion.

An open pattern that appears richer with metallic flakes less noticeable.

A closed pattern is best matched by reducing MOPAR Acrylic Lacquer Color 150% with MOPAR Deluxe Acrylic Lacquer Thinner G35, or equivalent.

An open pattern is achieved by lowering air pressure to 20-30 lbs. at gun, reducing MOPAR Acrylic Lacquer Color 100% with a blend of MOPAR Deluxe Acrylic Lacquer Thinner G35 and MOPAR all Purpose Retarder G36, or equivalent.

Compounding Color Coats

Compound sanded area that extends around refinish lacquer and then compound lacquer, blending it into enamel. **Hard surface of acrylic enamel will permit compounding without leaving scratches.**

PAINT BAKE OVEN TREATMENT (WITH TEXTURED GRILLES)

To avoid warpage, all models with textured grilles and headlamp bezels should be covered with paper or other material to shield grille assembly from heat before car enters paint bake ovens, or be completely removed from cars.

PAINT CHARTS

EXTERIOR COLORS

USED ON: L= Dart W= Coronet
J= Challenger D= Polara - Monaco

PAINT CODE	COLOR NAME	CHRYSLER CODE NUMBER	DITZLER CODE	REMARKS
A4	Light Gunmetal Poly	AY2GA4	2314	D, W, J, L
A8	Gunmetal Gray Poly	AY2GA8	2315	D
B2	Light Blue Poly	AY2GB2	2304	D, W, J, L
B5	Brite Blue Poly	AY2GB5	2306	W, J, L
B7	Dark Blue Poly	AY2GB7	2302	D, W, J, L
C7	Plum Crazy	AY2FC7	*2210	W, J, L
C8	Indigo Poly	AY2GC8	2305	D
E5	Bright Red	AY1FE5	*2136	D, W, J, L
E7	Burgundy Poly	AY2GE7	2321	D
F3	Medium Green Poly	AY2GF3	2316	W, J, L
F7	Dark Green Poly	AY2GF7	2317	D, W, J, L
J4	Lime Green Poly	AY2GJ4	2319	D

MyMopar.com

J6	Green Go	AY1FJ6	*2259	W, J, L
K6	Dark Bronze Poly	AY2GK6	2312	D, W, J, L
L5	Butterscotch	AY1EL5	2325	W, J, L
Q5	Turquoise Poly	AY2FQ5	2301	D
T2	Tan Poly	AY2GT2	2313	W, J, L
T8	Dark Tan Poly	AY2GT8	2309	D
V2	Hemi-Orange	AY2EV2	*2186	W, J, L
W1	White	AY1EW1	*2033	D
W3	Brite White	AY1GW3	*2300	W, J, L
X9	Black	AY1TX9	*9300	D, W, J, L
Y3	Citron Yella	AY1GY3	2320	D, W, J, L
Y4	Light Gold	AY1GY4	2310	D
Y8	Gold Poly	AY2GY8	2307	D, W, J, L
Y9	Dark Gold Poly	AY2GY9	2311	D, W, J, L

*Carry-Over Colors (or equivalent)

STRIPING COLORS

COLOR NAME	CHRYSLER CODE	DITZLER CODE
White	AS1EW1	2033
Black	TAS1X9	9000
Medium Dark Blue	AS1GB7	14013
Light Brite Blue	AS1GB4	14016
Medium Dark Blue Gold	AS1GY9	23362
Medium Dark Green	AS1GG8	44216
Light Brite Green	AS1GG5	44229
Brite Red	BAS1R5	71498
Light Gold	AS1GY4	81806

(or equivalent)

CORPORATE IDENTITY COLORS

Corporate White	8367
Corporate Red	71831

Single Tone	X9 - X9
Two-Tone	X9 - W1

First Two Digits are Accent or Roof Color.
Second Two Digits are Basic Body Color

For Special Colors (Coded 999) furnish Special Order (SO) Number and Selling Dealer with Serial number of car.

Argent Silver	DX-8555
Medium Textured Argent Silver	DNA-8575

MyMopar.com

INTERIOR GLOSS FINISH COLORS—POLARA-MONACO

Used On: Tailgate Frame 3rd. Seat Well (Exterior Paint all Codes)

COLOR NAME	CHRYSLER CODE NO.	DITZLER CODE-DIA	REMARKS
Black	AB1TX9	9000	
Medium Blue Poly	AB2GB7	2302	
Medium Tan Poly	AB2GT8	2309	
Medium Gold	AB1GY4	2310	
Medium Dark Green Poly	AB2GF7	2317 (or equivalent)	

SEMI-GLOSS FINISH COLORS

Used On: Accessory Unit Retainers

Ivory	AB3VW2	8355

LOW-GLOSS FINISH COLORS

Used On:
(a) Instrument Panel and Ash Receiver
(b) Glove Box Door and Radio Speaker Grille
(c) Automatic Gear Selector Quadrant and Steering Column Collar
(d) Stereo Speaker Grille
(e) Steering Column
(f) Windshield Garnish Moulding (coach)
(g) Roof Rails (Coachman)
(h) "C" Pillar Upper
(i) Backlite Upper and Lower Moulding
(j) Windshield Upper Header Garnish
(k) Backlite Cap
(l) Rear Shelf Defogger Bezel
(m) "C" Pillar Moulding
(n) Rear Deck and Seat Panel Assembly (Floor)
(o) Wheelhouse and Tire Cover Mouldings Grille Assembly Wheelhouse Cover
(p) Quarter Windows and Upper Tailgate Mouldings
(q) Headlining Moulding Retainer
(r) Rear Shelf Fasteners, Luggage Compartment all Codes Convertible Top Folding Assembly, all Codes

COLOR NAME	CHRYSLER CODE NO.	DITZLER CODE - DIA	REMARKS
White	AB61EW1	8849	f, g, h, i, j, k, m
Black	AB61DX9	9388	a, b, c, d, e, f, g, h, i, j, k, l, m, n, o, p, q, r
Medium Blue Poly	AB62GB7	14090	a, b, c, d, l, r
Light Blue Poly	AB62GB2	14120	f, g, h, i, j, k, m, n, o, p, q
Medium Gold Poly	AB62GY6	23426	a, b, c, d
Medium Dark Saddle	AB61GT6	23428	a, b, c, d, f, g, h, i, j, k, l, m, n, o, p, q, r

MyMopar.com

Light Gold Poly	AB62GY5	23468	f, g, h, i, j, k, l, m, r
Medium Blue Gray Poly	AB62GA6	32877	a, b, c, d, f, g, h, i, j, k, l, m, r
Dark Green Poly	AB62GF7	44290	a, b, c, d, f, g, h, i, j, k, l, m, n, o, p, q, r
Medium Russet	AB61GE9	60613	a, b, c, d, f, g, h, i, j, k, l, m, r

INTERIOR-GLOSS FINISH COLORS—CORONET-CHARGER

Used On: Inner Tailgate Integral and Sill (Exterior Paint)
"B" Pillar Cover.

COLOR NAME	CHRYSLER CODE NO.	DITZLER CODE-DIA	REMARKS
Black	AB1TX9	9000	
Medium Blue Poly	AB2GB7	2302	
Medium Tan Poly	AB2GT8	2309	
Medium Gold	AB1GY4	2310	
Medium Dark Green Poly	AB2GF7	2317 (or equivalent)	

LOW GLOSS FINISH COLORS

Used On:
(a) Instrument Panel End Cap Glove Box
(b) Instrument Panel Defroster Outlets
(c) Lower Rear Window Garnish Moulding
(d) Windshield Upper Inner Garnish Moulding
(e) "C" Pillar Garnish Moulding
(f) Rear Shelf Bezel Defogger Outlet
(g) Roof Rail Garnish Moulding
(h) "C" Pillar Lower Coachman
(i) Steering Column and Gear Selector Housing
(j) Hinge Arm Split Back Cover Front Seat Back
(k) Bucket Seat Outer and Inner Hinge Covers
(l) Rear Window Side Upper Corners Garnish Mouldings Steering Column
(m) Spacer Can and Cover
(n) Upper Tailgate Garnish Moulding Coachman
(o) Quarter Window Belt Moulding
(p) Quarter Window Roof Rail Moulding
(q) Floor Pans Panels Hinges Fillers and Moulding Assembly
(r) "C" Pillar Moulding
(s) Roof Rail and Rear Door Headliner Retainer
(t) "D" Pillar Speaker Grille

COLOR NAME	CHRYSLER CODE NO.	DITZLER CODE-DIA	REMARKS
White	AB61EW1	8849	c,d,e,g,j,k,l
Black	AB61DX9	9388	a,b,c,d,e,f,i,j,k,l,m
Medium Blue Poly	AB62BG7	14090	a,b,c,d,f,h,i,m,n,o,p,q,r,s,t
Brite Blue Poly	AB62GB5	14096	c,d,e,f,g,j,k,l
Medium Gold Poly	AB62GY6	23426	a,b,i,m
Medium Dark Saddle	AB61GT6	23428	a,b,c,e,f,k,l,m,o,p,q,r,s,t

MyMopar.com

Light Gold	AB61GY4	23467	c,e,f,j,k,l
Medium Blue Gray Poly	AB62GA6	32877	c,d,e,g,j,k,l
Dark Green Poly	AB62GF7	44290 (or equivalent)	a,b,c,d,e,f,g,h,i,j,k,l,m,n,o, p,q,r,s,t

INTERIOR LOW-GLOSS FINISH COLORS—CHALLENGER

Used On:
(a) Instrument Panel
(b) Glove Box Door Inner and Outer Check Arm
(c) Ash Receiver Face and Handle
(d) Stereo Speaker Grilles
(e) Steering Column
(f) Housing Assembly
(g) Collapsible Can
(h) "A" Pillar Cap and Outboard Moulding Header
(i) Inner Windshield Moulding
(j) Upper Windshield Header Moulding
(k) Backlite
(l) Roof Rail
(m) Forward Edge "C" Pillar Garnish
(n) Bench and Bucket Outer Hinge Cover
(o) Bucket Only Inner Hinge Cover
(p) Rear Shelf Defogger

COLOR NAME	CHRYSLER CODE NO.	DITZLER CODE-DIA	REMARKS
White	AB61EW1	8849	j,k,l,m,n,o
Black	AB61DX9	9388	a,b,c,d,e,f,g,h,i,j,k,l,m,n,o,p
Medium Blue Poly	AB62GB7	14090	a,b,c,d
Brite Blue Poly	AB62GB5	14096	h,i,j,k,l,m,n,o,p
Medium Gold Poly	AB62GY6	23426	a,b,c,d,h,i
Medium Dark Saddle	AB61GT6	23428	a,b,c,d,h,i,j,k,l,m,n,o,p
Light Gold	AB61GY4	23467	j,k,l,m,n,o,p
Dark Green Poly	AB62GF7	44290 (or equivalent)	a,b,c,d,h,i,j,k,l,m,n,o,p

INTERIOR GLOSS FINISH COLORS—DART

Used On:
(a) Upper and Lower Integral Door Garnish
(b) Upper and Lower Integral Quarter Panel Garnish
(c) Integral "B" Pillars
(d) Upper Lock Pillar
(e) Quarter Garnish Extension
(f) "C" Pillar Cover
(g) Door and Quarter Tirm Retainer
(h) "B" Pillar Cap
(i) Roof Rail
(j) Backlite and Center Joint Cap
(k) Upper Quarter Panel Moulding

MyMopar.com

COLOR NAME	CHRYSLER CODE NO.	DITZLER CODE-DIA	REMARKS
Black	AB1TX9	9000	a,b,c,d,e,f,g,h,i,j,k
Medium Blue Poly	AB2GB7	2302	a,b,c,d,e,f,g,h,i,j,k
Medium Tan Poly	AB2GT8	2309	a,b,c,d,e,f,g,h,i,j,k
Medium Gold	AB1GY4	2310	a,b,c,d,e,f,g,h,i,j,k
Medium Dark Green Poly	AB2GF7	2317 (or equivalent)	a,b,c,d,e,f,g,h,i,j,k

LOW GLOSS FINISH COLORS

Used On:
(a) Instrument Panel
(b) Glove Box Door and Outer Inner Check Arm
(c) Ash Receiver Face and Lighter Plug Cover
(d) Steering Column
(e) Automatic Gear Selector Quadrant
(f) Bucket Seat Outer and Inner Hinge Covers
(g) Rear Shelf Defogger Bezel
(h) Rear Shelf Fasteners

COLOR NAME	CHRYSLER CODE NO.	DITZLER CODE-DIA	REMARKS
White	AB61EW1	8849	f
Black	AB61DX9	9388	a,b,c,d,e,f,g,h
Medium Blue Poly	AB62GB7	14090	a,b,c,d,e,g,h
Medium Gold Poly	AB62GY6	23426	a,b,c,d,e
Medium Dark Saddle	AB61GT6	23428	a,b,c,d,e,g,h
Light Gold	AB61GY4	23467	f,g,h
Dark Green Poly	AB62GF7	44290 (or equivalent)	a,b,c,d,e,f,g,h

MyMopar.com

BODY AND FRAME ALIGNMENT

INDEX

	Page		Page
Frame Dimensions	1	Replacement	2
Body to Frame Alignment	1	Body Alignment Dimensions	1

SERVICE PROCEDURES

FRAME DIMENSIONS

The various frame dimensions (Figs. 1 and 2) may be used as a guide in measuring frame alignment. Diagonal measurements should be taken when straightening frame.

Minor frame alignment can usually be corrected by straightening bent frame parts. A badly distorted frame can in most cases be replaced more economically than by attempting repairs.

Body To Frame Alignment

The body to frame alignment measurement should be performed whenever the stub frame has been removed, replaced or repaired. Use shims from original frame, when replacing frame, as a guide in accomplishing body to frame alignment.

Align front suspension and aim headlights after body to frame alignment has been completed. For body to frame alignment dimensions refer to "Body Alignment Dimensions (Figs. 3 through 6). **Follow equipment manufacturers recommendations and procedures.**

BODY ALIGNMENT DIMENSIONS

Body alignment may be accurately measured by the following method. Elevate vehicle to a level position over a clean and smooth floor.

Refer to (Figs. 3 through 6) and place the line of a plumb-bob on point "A" with the plumb-bob just contacting the floor. Mark the plumb-bob contact point on floor. Repeat process at points B, C, D, E and F on both sides of body. Snap a chalk line between points as illustrated. **Care should be taken that all diagonals compared represent the corresponding measuring points.**

Compare the dimensions with the specifications. All matching point to point dimensions should agree within 1/4 inch.

In making any body opening measurements, always compare the matching measurements of both sides of the vehicle. All dimensions must be measured at the welded joints of the body to insure uniform measurements.

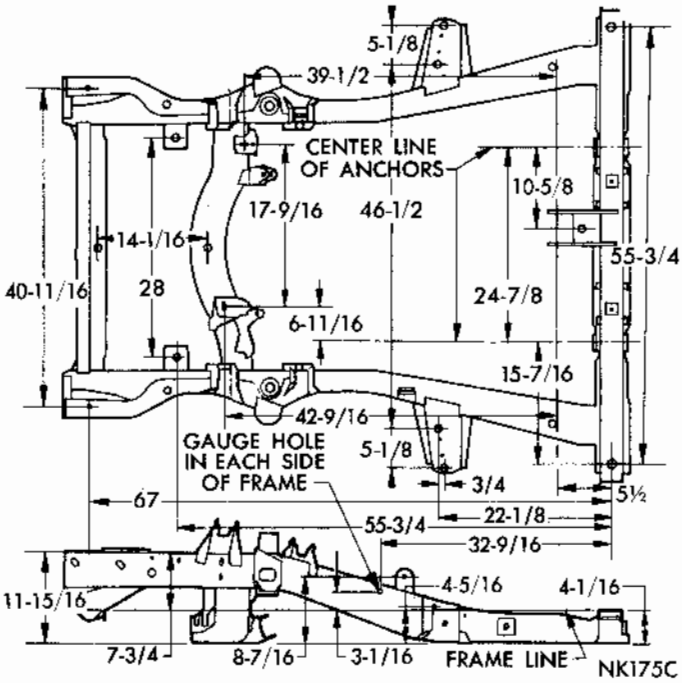

Fig. 1 - Frame Dimensions (6 Cylinder)

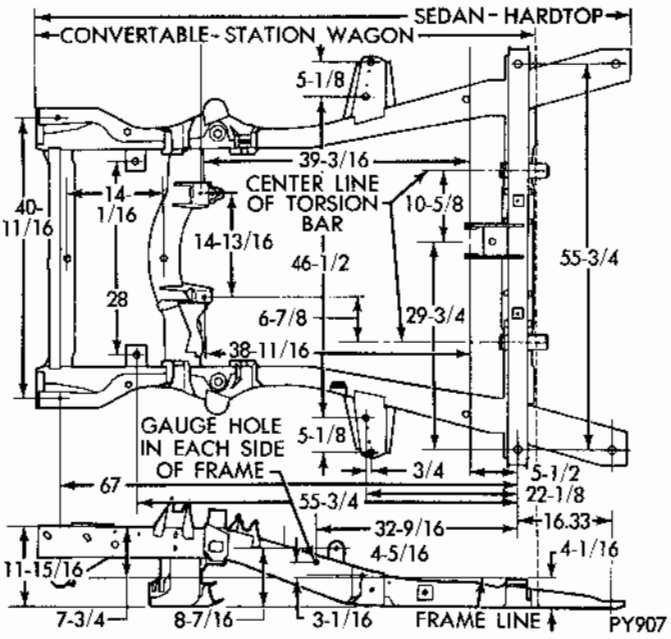

Fig. 2 - Frame Dimensions

MyMopar.com

FRAME REPLACEMENT (POLARA-MONACO) (FIG. 7)

The forestructure (isolated stub-frame), engine, transmission, steering and suspension can be removed as an assembly.

Remove hood and bumper, then remove fenders wheel house panels, grille and radiator as an assembly, support vehicle at sill area.

(1) Remove battery and air cleaner, drain cooling system, remove radiator and shroud, disconnect heater hoses from engine, and disconnect battery tray from frame.

(2) Discharge air conditioning system, (refer to 'Air Conditioning' **Group 24** in the Chassis Service Manual for discharging and charging the system). Disconnect air conditioning lines at firewall, discharge line at muffler and suction line at evaporator. **Seal open ends of air conditioning fittings and connectors.**

(3) Disconnect throttle and speed control cables at carburetor, vacuum hose controlling accessories at engine manifold, remove or disconnect electrical wiring including engine to cowl ground strap.

(4) Remove roll pin from steering gear coupling, disconnect shift linkage, steering column floor pan and steering column from support bracket and move column up approximately 3 inches.

(5) Raise vehicle on twin post hoist, remove drive shaft, exhaust pipes, shift rod and clutch linkage at torque shaft, rear seat heater or air conditioning clamps at side rail, wheel house bolts at frame side rails, radiator support brace, bumper assembly and hood lock vertical lower support.

(6) Disconnect speedometer cable, electrical leads at starter, gas line at frame connection and plug line, emergency brake cable at rear cable attaching bracket and remove from rear frame crossmember.

(7) Support vehicle securely on stable floor stands (4,000 lbs. capacity) at rear of rear spring shackle boxes. At the front vehicle place stands under body at the side sill area, place a 4 x 4 inch x 7 foot wood beam across stands for extra strength and 2 x 4 x 6 inch pieces of wood on top of main support beam and to lower flat surface of the side sills. Then lower rear axle to lowest position to assist in balancing body weight when frame assembly is removed.

(8) Position a hydraulic transmission jack under the frame rear crossmember.

It is recommended that the following service procedure be used when removing isolated stub frames. After the above steps 1 through 8 have been performed.

The body isolators (Fig. 7) which are located at three positions: the radiator yoke, the dash foot,

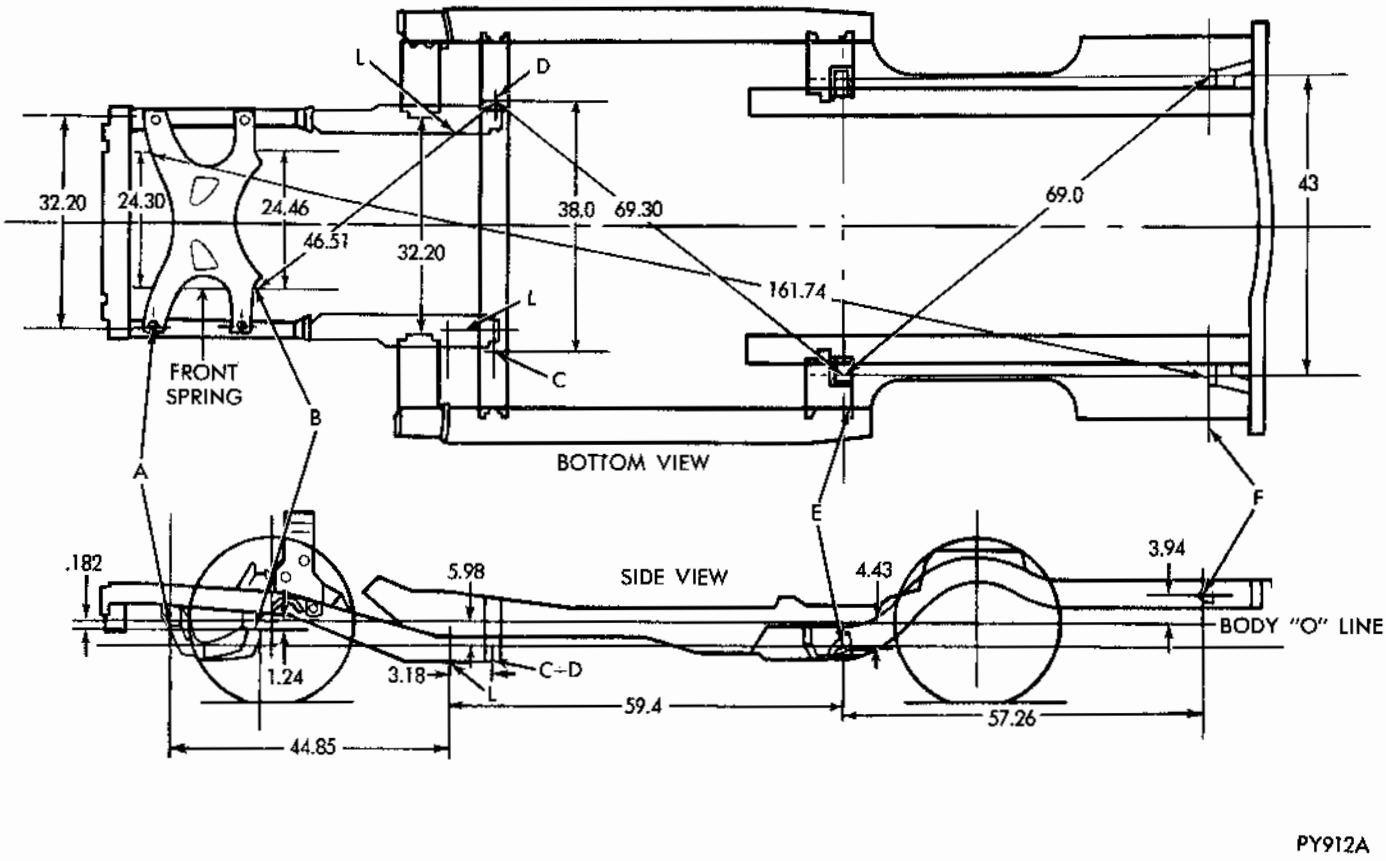

Fig. 3 - Body Alignment Dimensions (Dart),

MyMopar.com

and the frame rear, will transfer normal loads to the body. IF, **HOWEVER, AN IMPROPER TIGHTENING OR LOOSENING SEQUENCE OF THE ISOLATOR SYSTEM OCCURS, EXCESSIVE LOADS MAY BE TRANSFERRED TO THE FRONT END SHEET METAL. THIS CAN RESULT IN BUCKLING OF THE FRONT FENDERS.**

The front end sheet metal alone should never support the stub frame as this will cause the fenders to buckle. The front end sheet metal is attached to the stub frame through the radiator yoke, isolators and through bumper-to-sheet metal attachment. Removal of the stub frame may be started by removing the bottom nuts at the radiator yoke locations. This must be done before the bolts are removed from the dash foot, or the frame rear locations. Total separation of the frame and body may be completed by lowering the frame after all three locations are disconnected.

(9) Remove the frame assembly from the vehicle by lowering the front post and transmission jack slowly at the same speed.

(10) If a twin post hoist is not available the vehicle can be supported on short stands about 36 inches high and using the same wood blocking with the use of floor jacks to support the transmission and suspension the stub-frame assembly removal can be accomplished.

(11) If frame is to be replaced transfer serviceable parts to new frame.

Installation

When a frame is being reinstalled on a body, spacers should be used on each side. Tightening of the isolators must always follow this order: (1) the dash foot, (2) the frame rear are fully tightened prior to installing the bottom cup washer and nut at the radiator yoke.

(1) Raise frame assembly into position. On Convertible and Station Wagon models, guide rear crossmember into channel and studs, and front top edge of frame into slots in lower flange of radiator support yoke.

(2) On Sedan-Hardtop models, position rear of frame on isolator (Fig. 7), and front on isolator studs at radiator support.

(3) Install body to frame bolts, nuts, washers and/or insulators.

On Station Wagon and Convertible models torque to 75 foot-pounds.

On Sedan--Hardtop models tighten to specified torque in (Fig. 7).

(4) Install nuts, washers, spacers and insulators, if so equipped, on studs at radiator support yoke lower flanges.

On Sedan--Hardtop models torque nuts to 30

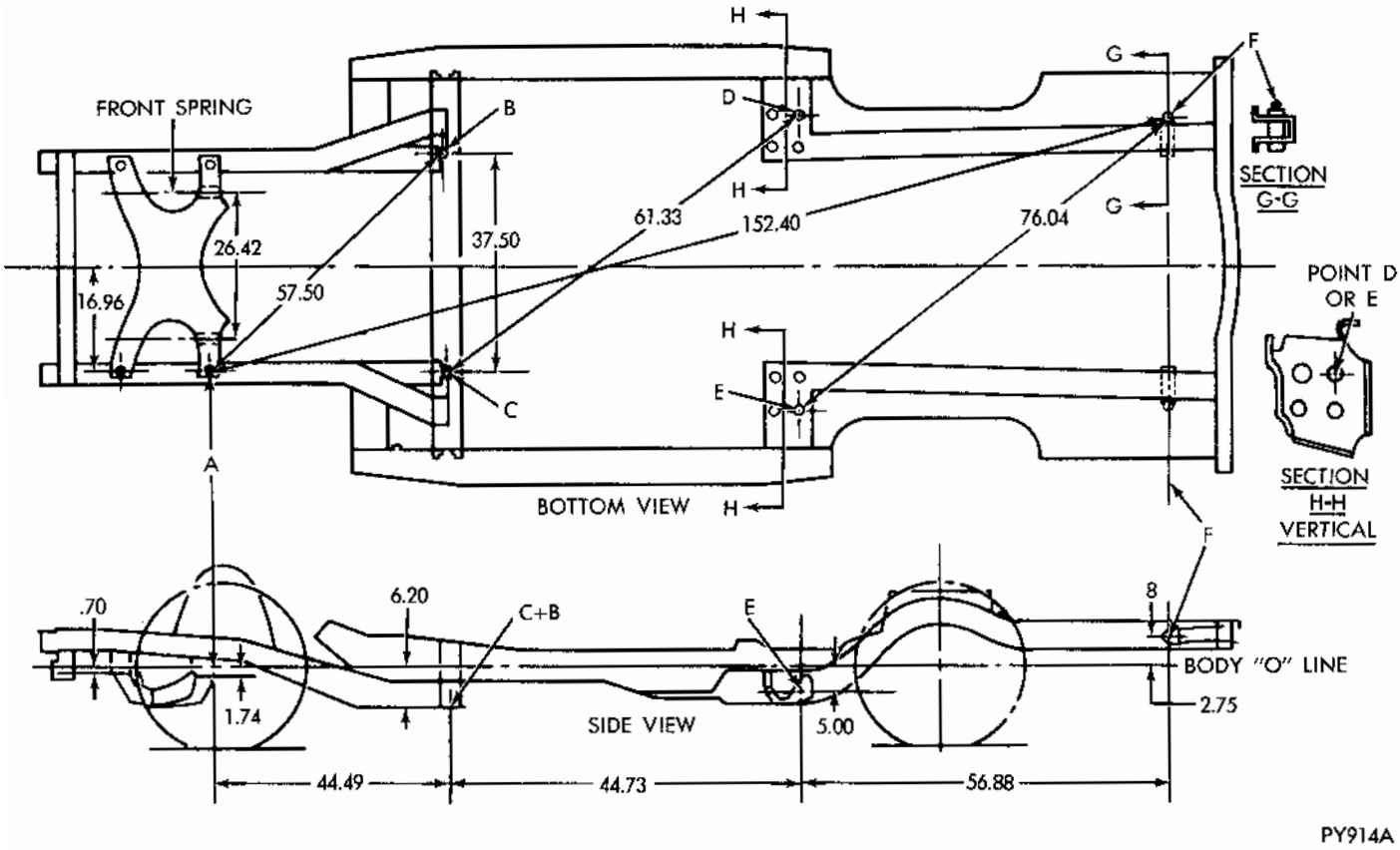

Fig. 4 - Body Alignment Dimensions (Challenger)

MyMopar.com

foot-pounds (Fig. 7).

(5) Remove transmission jack and body support stands.

(6) Connect emergency brake cable, starter leads, gas line and speedometer cable.

(7) Install drive shaft, exhaust pipes, shift rod or clutch linkage at torque shaft, rear seat heater or air conditioning piping clamps at side rails, wheel house and battery tray bolts at frame, radiator support brace, hood lock vertical lower support and bumper assembly.

(8) Lower vehicle, install and adjust steering column, accelerator and speed control cables.

(9) Install radiator and shroud, connect coolant lines radiator and heater hoses, electrical wiring, vacuum and air conditioning lines.

(10) Install battery and air cleaner, fill cooling system and charge air-conditioning system.

Individual Insolator Changes (Fig. 7)

If a single isolator change is made using a twin post suspension hoist, the following steps are to be followed:

(1) All front end sheet metal pencil struts (front structure reinforcement), and the wheel house inner panels must be installed and the bolts tight.

(2) Remove bumper to hood latch support bracket.

(3) Remove bumper rod assembly.

(4) Remove bumper rubber pad.

(5) The lower nut at the radiator yoke position, should be removed on both sides.

(6) Do not loosen bolts at the dash foot position and at the frame rear position at this time.

(7) **By supporting the body adequately on the sills but not on any portion at the front end sheet metal,** and lowering the hoist slightly, sufficient body to frame separation can be obtained by loosening the bolts at the dash foot position and frame rear position to change body isolator at any location.

If a single isolator change is made using a **frame contact hoist** the steps 1 through 5 are to be followed then procede as follows:

(8) All mounts on the side of the car where the mount is being changed should be loose. At the frame rear, the isolators will still carry a load even though the nut is loosened. **(Do not remove nut unless that mount is being changed).** At the radiator yoke, both sides right and left are to be loose at all times during the change.

(9) The dash foot position, isolators should never all be loose at the same time. Both isolators on one side, either right or left, may be loosened or changed at one time but the other side is to be tight while this is being done.

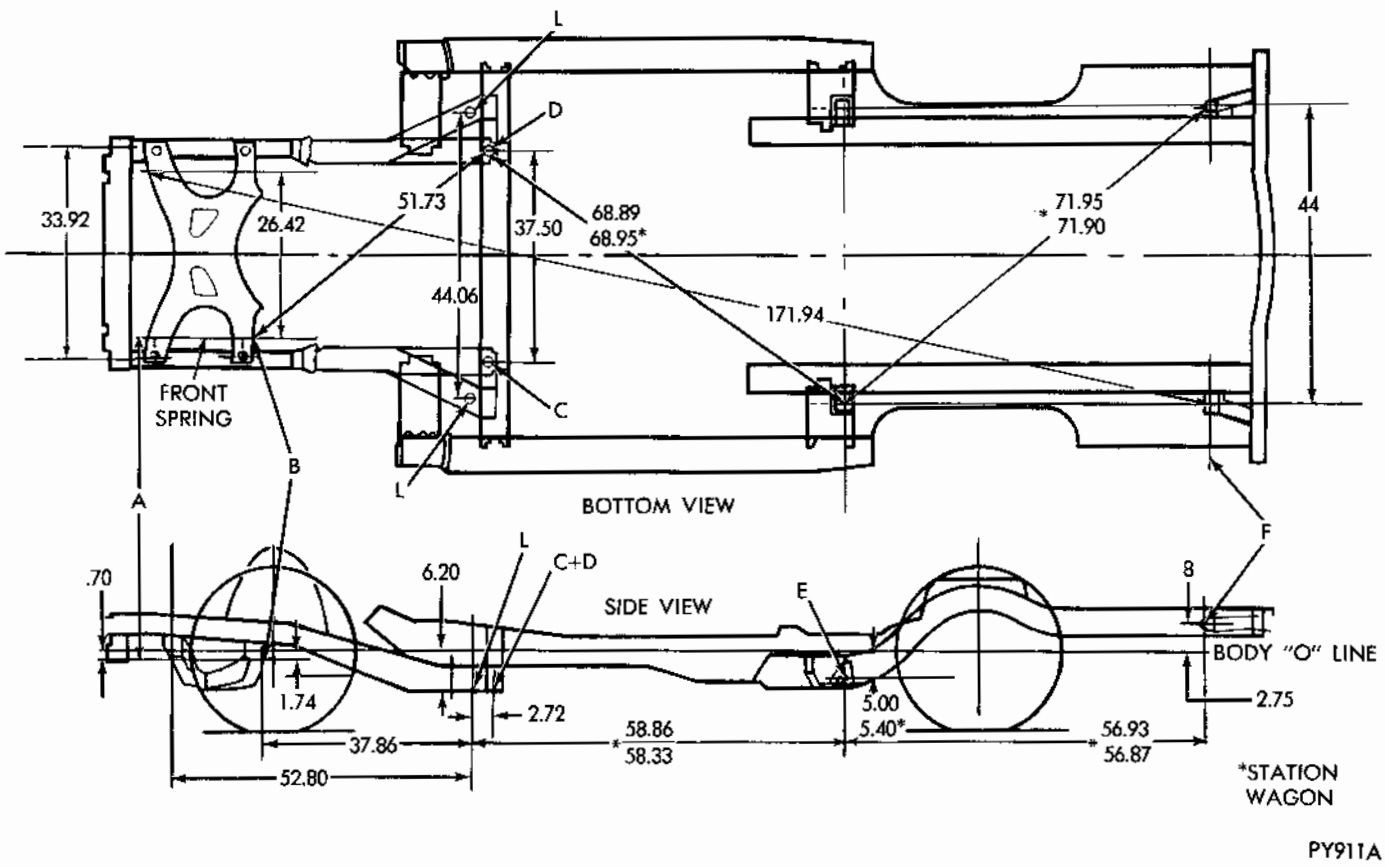

Fig. 5 - Body Alignment Dimensions (Coronet/Charger)

MyMopar.com

(10) Jacking or prying or any other technique used to separate the body and frame at any time be especially on a frame contact hoist (so that isolators can be changed) **must be performed with extreme care** since this is the way load can be transferred to the front end sheet metal, the radiator yoke studs should be loose at all times.

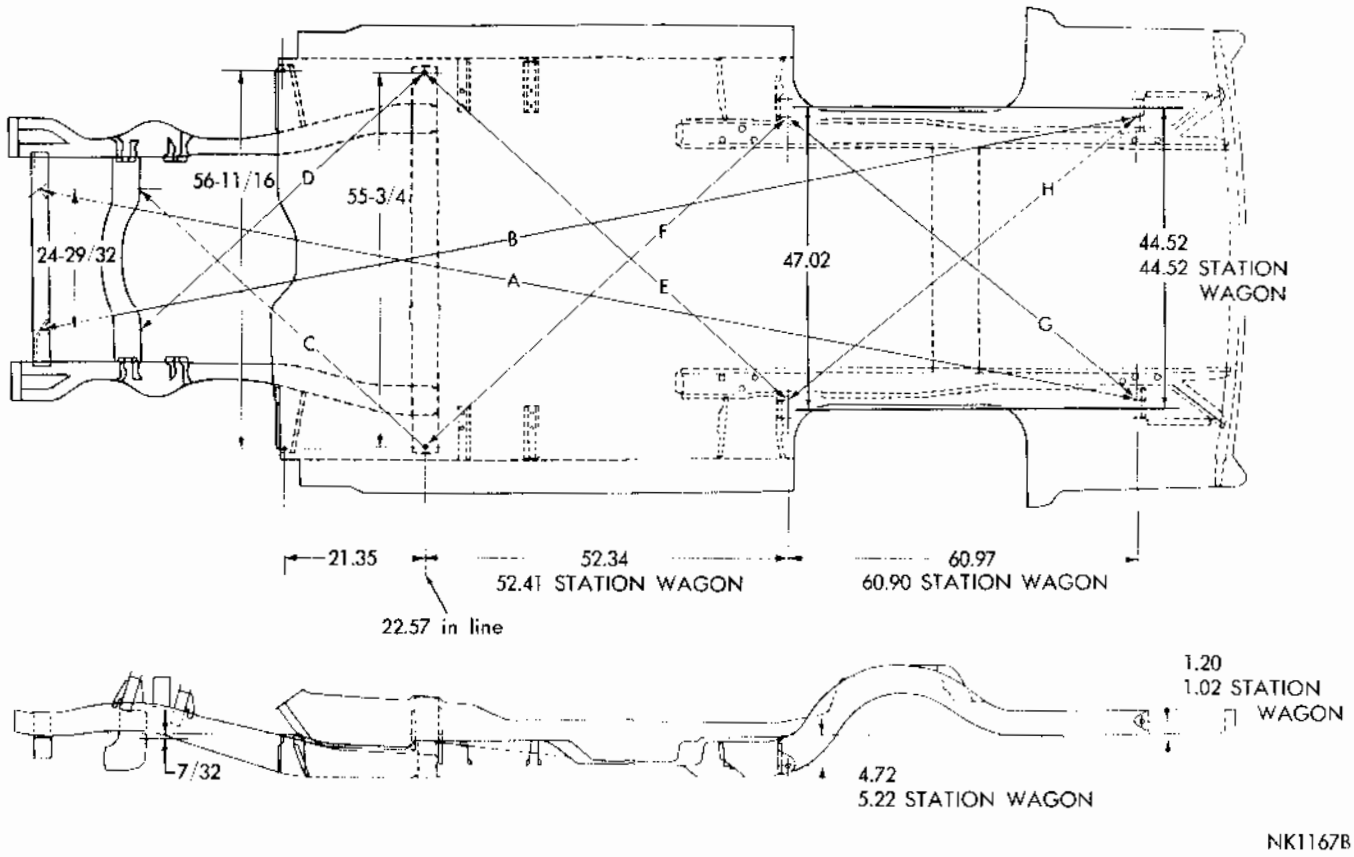

Fig. 6 - Body and Frame Alignment (Polara/Monaco)

MyMopar.com

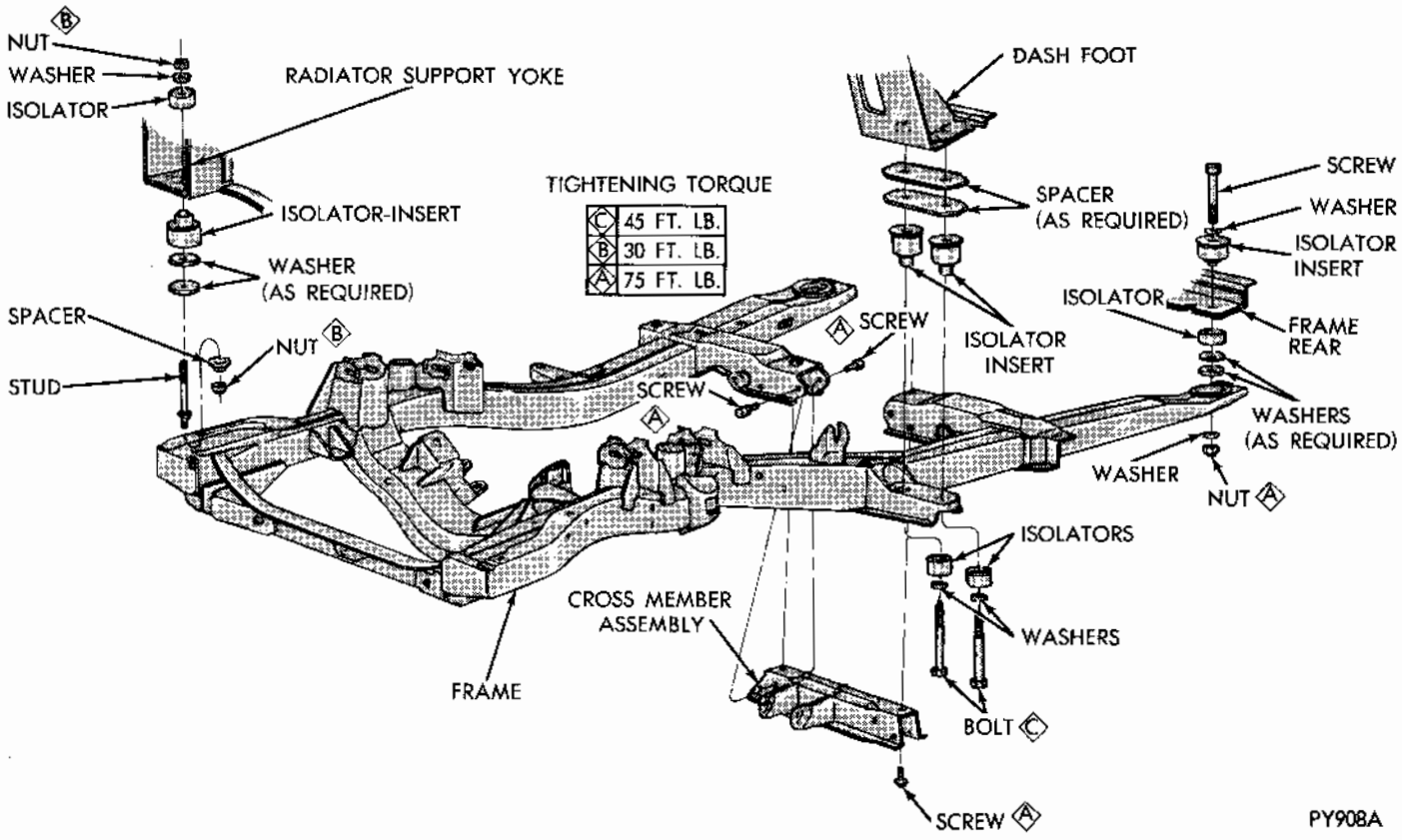

Fig. 7 - Isolated Stub Frame

MyMopar.com

1971 BODY SERVICE MANUAL

ALPHABETICAL INDEX

INDEX

	Page
BODY AND FRAME ALIGNMENT	13-1
Body Alignment Dimensions	13-1
Body to Frame Alignment	13-1
Frame Dimensions	13-1
Frame Replacement	13-2
CONVERTIBLE	8-1
Adjustments	8-4
Cam Adjustment	8-4
Control Link Adjustment	8-4
Cylinder Hose Routing	8-2
Dowel Bracket	8-3
Electrical Tests	8-5
Folding Top and Well Cover	8-7
Folding Top Mechanism	8-1
Front Hinge Adjustment	8-4
Header Adjustment	8-4
Index	8-1
Manual Top	8-4
Operating the Top	8-1
Reservoir	8-1
Stack Height	8-5
Seals and Sealers	8-7
Side Tension Cable	8-5
Service Diagnosis	8-1
Weatherstrips	8-7
Web Straps	8-5
Well Liner	8-5
ELECTRICAL	5-1
Bulb Charts	5-40
Concealed Headlamps	5-23
Convertible Top Lift	5-36
Electric Locks	5-31
Front End Lighting (Except Headlights)	5-5
Fuse Charts	5-42
Headlamps (Adjustment and Aiming)	5-1
Headlamp Washers	5-27
Power Seats	5-33
Power Window Lifts	5-29
Rear End Lighting	5-12
Tailgate Washers	5-37
Wiring Diagrams	5-43
INTERIOR TRIM	4-1
Console	4-17
Cover Material Installation	4-17
Floor Covering	4-1
Front Seat Back Latch	4-13
Garnish Mouldings	4-1
Glove Box	4-2
Glove Box Lock	4-2
Headlining	4-3
Lining Section	4-6
Power Seats	4-17
Replacement - Seats and Covers	4-15
Safety Belts	4-6
Seats	4-11
Shelf Trim Panel	4-6
Six Way Manual Seat	4-15
INTRODUCTION	1
Capacity Conversion Table	4
Foreward	1
Manual Description	2
Models	1
Quick Reference Index	1
Specifications Chart	5
Torque Reference	6
Vehicle and Engine Numbers	2
LUBRICATION	2-1
Body Maintenance	2-1
Deck Lid Hinges	2-4
Deck Lid Latch	2-3
Door Hinges	2-1
Door Lock Ratchet and Striker Bolt	2-2
Door Locks and Locking Control Linkage	2-2
Door Remote Control Link	2-3
Fuel Tank Access Door Hinge	2-5
Hood Hinges	2-1
Hood Locks, Release Mechanism and Safety Catch	2-1
Lock Cylinders	2-2
Tailgate-Door Lubrication	2-4
Tailgate-Window Wiper Linkage	2-5
Window Regulator, Glass Lower Frame	2-3
MAINTENANCE AND CARE	1-1
Appearance	1-1
Drain Holes	1-4
General Information	1-1
Index	1-1
Interior Trim	1-1
Lubrication	1-4
Tires	1-4
Vinyl Roof Covering	1-1
REFINISHING PROCEDURES	12-1
Acrylic Finish	12-1
Definitions of Technical Terms	12-1
Index	12-1
Paint Bake Oven Treatment	12-3
Paint Charts	12-3
Paint Repair On Galvanized Metals	12-2
Refinishing	12-2
Spot Repairs	12-3
SEALING	11-1
General Information	11-1
Index	11-1
Purpose of Sealers	11-1
Sealers and Compounds	11-2
Service Procedures	11-1
SHEET METAL	3-1
CHALLENGER	3-42
Bumpers	3-47
Cowl Seal to Cowl Panel	3-44
Cowl Side Trim Panel	3-44
Deck Lid	3-54
Deck Lid Weatherstrip	3-55
Doors	3-49
Doors and Latch Adjustment	3-50
Door Latch Striker Adjustment	3-50
Door Lock Cylinder Linkage	3-50
Door Trim Panel Installation	3-51
Fenders	3-46
Folding Top Pocket Assembly	3-53

MyMopar.com

INDEX

	Page
Front Door Latch Locking Control	3-51
Grille	3-47
Hood	3-45
Latch Link	3-50
Lock Cylinder	3-51
Outside Air Vents	3-51
Outside Handle	3-51
Quarter Panel Airshield	3-53
Quarter Panel Trim	3-53
Radiator Yoke Support	3-47
Remote Control	3-51
Scuff Plate	3-43
Shelf Trim Panel	3-43
Torsion Bar Replacement	3-55
CORONET	3-21
Air Shield	3-30
Bumpers	3-30
Carburetor Air System	3-24
Doors	3-30
Fenders	3-24
Grille	3-30
Hood	3-22
Latch and Striker	3-31
Outside Air Vents	3-21
Outside Handles	3-34
Radiator Yoke Support	3-29
Tailgate	3-36
Weatherstrip Roof Rail	3-35
Weatherstrip Tailgate	3-40
DART	3-55
Air Shield	3-60
Arm Rests	3-63
Bumpers	3-60
Deck Lid	3-66
Doors	3-61
Fenders	3-59
Grille	3-61
Hinge Replacement	3-62
Hood	3-57
Inside Handles	3-62
Lock Assembly	3-63
Outside Air Ducts	3-56
Outside Handles	3-64
Radiator Yoke Support	3-60
Torsion Bar Replacement	3-66
Trim Panels	3-63
Weatherstrips and Windcords	3-65
POLARA-MONACO	3-1
Air Shield and Cross Bar	3-6
Arm Rest	3-10
Bumpers	3-6
Cowl Top Panel Seal	3-1
Door Replacement	3-12
Electric Door Locks	3-12
Fenders	3-4
Grille	3-8
Hinge Replacement	3-8
Hood	3-3
Inside Handles	3-10
Lock-Hood	3-4
Outside Air Vent	3-1
Outside Handle	3-13
Radiator Yoke Support	3-6
Side Cowl Trim Panel	3-1
Trim Panel	3-16
Vent Door	3-2
Water Shield	3-10
Weatherstrips and Windcords	3-13
Wheelhouse	3-4
SIDE GLASS	6-1
CHALLENGER	6-28
Glass Assembly Ventless	6-29
Quarter Window Installation	6-31
Quarter Panel Glass	6-30
Ventless Door Glass Adjustment	6-29
Ventless Door Glass Installation	6-29
CORONET	6-22
Glass Adjustment - Hardtop	6-23
Glass Adjustment - Sedan	6-24
Glass Attachment	6-23
Glass Replacement	6-26
Regulator	6-25
Rear Doors	6-24
Tailgate Glass	6-26
DART	6-33
Rear Doors	6-35
Rear Door Stationary Glass	6-36
Regulator Replacement	6-36
Sedan Models	6-34
Ventless Glass	6-33
POLARA-MONACO	6-1
Glass Adjustment - Sedan	6-10
Glass Adjustment - 2 Door Hardtop	6-2
Glass Adjustment - 4 Door Hardtop	6-6
Glass Rear Track	6-4
Glass Replacement	6-10
Hardtop Models	6-12
Handles	6-15
Index	6-1
Quarter Panels	6-15
Quarter Windows - Hardtop	6-16
Regulator Arm - Manual	6-5
Up-Stops	6-5
Water Shields	6-15
STATIONARY GLASS	7-1
Index	7-1
Station Wagon Glass Replacement	7-6
Station Wagon Quarter Glass	7-4
Weatherstrip Type Replacement	7-2
Windshield and Rear Window	7-1
VINYL ROOF COVERING	9-1
Cleaning Grain Surface	9-3
Cover Replacement	9-1
Index	9-1
Making Graining Tool	9-3
Spraying of Colors	9-7
Vinyl Top Repair	9-4
WOOD GRAIN OVERLAY	10-1
Application of Overlay	10-1
Index	10-1
Inspection	10-3
Repair of Major Damage	10-3
Repair of Minor Damage	10-4
Repair of Minor Scratches	10-4
Repair of Sheet Metal Dings	10-4
Service Procedures	10-1
Temperature	10-1

MyMopar.com

UNITED STATES

The special service tools referred to herein are required for certain service operations. These special service tools or their equivalent, if not obtainable through a local source are available through the following outlet.

Miller Special Tools, 17640 Grand River Avenue, Detroit, Michigan 48227, U.S.A. A division of Utica Tool Company Inc.

Dodge CHRYSLER MOTORS CORPORATION

This service manual is printed in English only. Extra copies are available at $10.00 each, plus any state or local taxes where applicable, under Part Number 81-270-1250 from Dodge Division, Service Department, P.O. Box 1259, Detroit, Michigan 48231.

P&CSO 8-70

MyMopar.com